GOVERNMENT OF THE DISTRICT OF COLUMBIA
Department of Parks and Recreation

Scope of Work
For
Bench and Picnic Table Renovations
At
Seventeen (17) District Parks

1. SCOPE

The District of Columbia Department of Parks and Recreation ("DPR") seeks the services of a contractor ("Consultant") to (a) demolish and dispose of existing benches and picnic tables and (b) purchase and install new benches and picnic tables at seventeen (17) DPR sites.

The goal of this project is to improve the physical and visual appearance of the site, thereby enhancing the overall usability of the site by the community.

2. DESCRIPTION OF WORK

Contractor shall provide all labor, materials, equipment and supplies to accomplish the following work:

a) Demolish and dispose of existing benches and picnic tables at selected sites;
b) Install new benches and picnic tables on new individual concrete pads.

2.1. Sites

Ward 8

a) Congress Heights, 7th St, South of Alabama Ave SE
b) Douglass Rec. Center, Bruce Pl SE and Frederick Douglass Ct. SE

Ward 7

a) Benning Park, 51st and Fitch St SE
b) Ridge Rec. Center, Ridge Rd and Burns St SE
c) Benning Stoddert, 100 Stoddert PL. SE

Ward 6

a) Sherwood Rec. Center- 541 G St. NE
b) Joy Evans, 6th St between L and M St. SE

Ward 5

a) Brentwood Park, 15th and Downing Sts. NE
b) Harry Thomas, Lincoln Rd and 2nd St to R and T Sts. NE

Ward 4

a) Triangle Park, 18th and Argyle St. NW
b) Petworth, Taylor St, between 8th and 9th St NW
c) Hamilton Park, 13th and 14th Sts. To Hamilton and Gallatin Sts, NW.

Ward 2

a) Kennedy, P St between 6th and 7th Sts. NW
b) Georgetown rec. Center, Volta Pl and Q St; 33rd and 34 Sts. NW

Ward 1

a) Walter Pierce Park, Adams Mill and Ontario Rds. NW
b) Marie Reed, 18th St and Kalorama Rd. NW
c) Kalorama, Kalorama Rd. between Columbia Rd and 19th St NW

See attached aerial images for general reference.

Precise locations for benches, picnic tables and pads within each site are to be approved by DPR Contract Administrator (CA) prior to installation.

2.2. Quantities for Demolition and Disposal of furniture

Consultant will work with CA to determine which sites we will be demolishing and disposing of benches/picnic tables and those that will not.

2.3. Quantities for Installation (benches and picnic tables)

a) Congress Heights = 1 picnic table and 1 bench near playground (VS model RB-28) and (VS model FRST-6)
b) Douglass = 2 picnic table near playground and 3 backless benches in circle at front of rec. center (VS model FS-53) and (VS model FRST-6)
c) Benning Park = 2 benches; one in either play area (VS model RB-28)
d) Ridge = 2 benches; one near the field and one near playground (VS model RB-28)
e) Benning Stoddert = 2 benches on the hill (VS model RB-28)
f) Sherwood Recreation Center = 1 bench either front side of rec. center and 1 picnic table side near field (VS model RB-28) and (VS model FRST-6)
g) Joy Evans =1 bench near playground (VS model RB-28)
h) Brentwood Park = 2 benches in play area (VS model RB-28)
i) Harry Thomas = 1 bench near play area (VS model RB-28)
j) Triangle Park 18th and argyle = 2 benches as memorial benches (VS model RB-28)
k) Petworth = 1 bench, near tot lot, next to existing benches (match to existing benches) Victor Stanley Classic Series (Model CR-138)
l) Hamilton Park = 1 picnic table, near new tot lot/ play area (VS model FRST-6)
m) Georgetown Recreation Center = 1 picnic table (VS model FRST-6)
n) Kennedy = 1 bench near B-Ball court, 1 picnic table near play area or open area (VS model RB-28) and (VS model FRST-6)

o) Walter Pierce Dog Park = restore certain existing furnishings (tables/seats); Remove footing for 1 picnic table entirely, restore wood slats on 2 picnic tables/seats and install 2 new benches. (VS model FS-53).
p) Marie Reed = 1 bench near park entrance (VS model FS-53)
q) Kalorama =1 picnic table in the park (VS model FRST-6)

The consultant will work with CA to determine precise locations of items during the walkthrough. New bench slats for the picnic tables at Walter Pierce Dog Park shall be treated for weather-resistance, style to match existing or equivalent.

3. KEY DATES/SCHEDULE

Consultant shall have a maximum of twelve (12) weeks to complete the project from the date of the Notice to Proceed ("NTP").

Consultant shall not begin any field work until the schedule has been approved by CA.

4. Specifications

Consultant shall ensure that the work meets the following minimum specifications.

4.1. Furnishings

Fifteen (15), 6 foot (6.0') steel bench, Victor Stanley SteelSites Series Model RB-28, color standard green or equivalent. See Attachment C.

Six (6), 6 foot (6.0') steel rod backless bench, Victor Stanley Streetsite Series, Model FS-53, color VS black, or equivalent. See Attachment C.

One (1) 6 foot (6.0') steel rod bench, Victor Stanley Classic series, Model CR-138, color VS black or equivalent. See Attachment C.

Eight (8), 6 foot (6.0') rectangular in ground mounted table with benches, Victor Stanley Steelsites Series Model FRST-6, color standard green or equivalent. See Attachment C.

Two (2) Restored picnic tables- at Walter Pierce Dog Park

4.2. Concrete Pad

Min. 4" thick concrete with 6" x 6" welded wire mesh, on min. 4" compacted (95%) aggregate base. See Attachment B.

5. SUBMITTALS AND DELIVERABLES

Consultant shall provide the following deliverables for review and approval by CA.

Item	Format/Method	Due Date
Proposed schedule of work	One (1) electronic copy Two (2) hard copies	Within ten (10) days of NTP
Bench and picnic table cut-sheets	One (1) electronic copy Two (2) hard copies	Within ten (10) days of NTP

Hard copies shall be hand delivered to the CA. Electronic deliverables shall be submitted electronically to the CA.

6. DISTRICT'S RESPONSIBILITIES

The CA shall be responsible for the overall management of Consultant efforts.

CA shall respond to any request from the Consultant for additional information or clarity within three (3) days of receipts of such request.

7. CONTRACT ADMINISTRATOR

The Contract Administrator for this project is:

Ella Faulkner, MA, MRCP Community Planner
Department of Parks & Recreation
Office of Planning & Capital Improvements
1480 Girard Street, NW
Fourth Floor
Washington, DC 20010
Cell 202-286-1533
ella.faulkner@dc.gov

8. CONTRACTING OFFICER

The Contracting Officer for this project is

Diane Wooden
Department of Real Estate Services
Contracting & Procurement Division
2000 14th Street, NW, 5th Floor
Washington, DC 20009
Diane.Wooden@dc.gov

9. INSURANCE

a. GENERAL REQUIREMENTS. The Contractor shall procure and maintain, during the entire period of performance under this contract, the types of insurance specified below. The Contractor shall have its insurance broker or insurance company submit a Certificate of Insurance to the Contracting Officer giving evidence of the required coverage prior to commencing performance under this contract. In no event shall any work be performed until the required Certificates of Insurance signed by an authorized representative of the insurer(s) have been provided to, and accepted by,

the Contracting Officer. All insurance shall be written with financially responsible companies authorized to do business in the District of Columbia or in the jurisdiction where the work is to be performed and have an A.M. Best Company rating of A-VIII or higher. The Contractor shall require all of its subcontractors to carry the same insurance required herein. The Contractor shall ensure that all policies provide that the Contracting Officer shall be given thirty (30) days prior written notice in the event the stated limit in the declarations page of the policy is reduced via endorsement or the policy is canceled prior to the expiration date shown on the certificate. The Contractor/Insurance Company shall provide the Contracting Officer with ten (10) days prior written notice in the event of non-payment of premium.

1) Commercial General Liability Insurance. The Contractor shall provide evidence satisfactory to the Contracting Officer with respect to the services performed that it carries $1,000,000 per occurrence limits; $2,000,000 aggregate; Bodily Injury and Property Damage including, but not limited to: premises-operations; broad form property damage; Products and Completed Operations; Personal and Advertising Injury; contractual liability and independent contractors. The policy coverage shall include the District of Columbia as an additional insured, shall be primary and non-contributory with any other insurance maintained by the District of Columbia, and shall contain a waiver of subrogation. The Contractor shall maintain Completed Operations coverage for five (5) years following final acceptance of the work performed under this contract.

2) Automobile Liability Insurance. The Contractor shall provide automobile liability insurance to cover all owned, hired or non-owned motor vehicles used in conjunction with the performance of this contract. The policy shall provide a $1,000,000 per occurrence combined single limit for bodily injury and property damage.

3) Workers' Compensation Insurance. The Contractor shall provide Workers' Compensation insurance in accordance with the statutory mandates of the District of Columbia or the jurisdiction in which the contract is performed.

   Employers' Liability Insurance. The Contractor shall provide employers' liability insurance as follows: $500,000 per accident for injury; $500,000 per employee for disease; and $500,000 for policy disease limit.

   If projects hereunder include water operations, the U.S. Longshoremen and Harbor Workers' Compensation Act and Maritime endorsements must be purchased and attached to employers' liability insurance policy.

4) Installation-Floater Insurance. For projects not involving structures, the contractor shall provide an installation floater policy with a limit equal to the full contract value. The policy shall cover property while located at the project site, at temporary locations, or in transit; deductibles will be the sole responsibility of the contractor; and name the District of Columbia as the loss payee on the policy, as its interests may appear. A waiver of subrogation in favor of the District of Columbia shall be included.

5) Umbrella or Excess Liability Insurance. The Contractor shall provide umbrella or excess liability (which is excess over employer's liability, general liability, and automobile liability) insurance as follows: $2,000,000 per occurrence, including the District of Columbia as additional insured.

b. DURATION. The Contractor shall carry all required insurance until all contract work is accepted by the District, and shall carry the required General Liability; and any required Professional Liability for five (5) years following final acceptance of the work performed under this contract.

c. LIABILITY. These are the required minimum insurance requirements established by the District of Columbia. HOWEVER, THE REQUIRED MINIMUM INSURANCE REQUIREMENTS PROVIDED ABOVE, WILL NOT IN ANY WAY LIMIT THE CONTRACTOR'S LIABILITY UNDER THIS CONTRACT.

d. CONTRACTOR'S PROPERTY. Contractor and subcontractors are solely responsible for any loss or damage to their personal property, including but not limited to tools and equipment, scaffolding and temporary structures, rented machinery, or owned and leased equipment. A waiver of subrogation shall apply in favor of the District of Columbia.

e. MEASURE OF PAYMENT. The District shall not make any separate measure or payment for the cost of insurance and bonds. The Contractor shall include all of the costs of insurance and bonds in the contract price.

f. NOTIFICATION. The Contractor shall immediately provide the Contracting Officer with written notice in the event that its insurance coverage has or will be substantially changed, canceled or not renewed, and provide an updated certificate of insurance to the Contracting Officer.

g. CERTIFICATES OF INSURANCE. The Contractor shall submit certificates of insurance giving evidence of the required coverage as specified in this Insurance Section prior to commencing work. Evidence of insurance shall be submitted to:

Diane Wooden
Department of Real Estate Services
Contracting & Procurement Division
2000 14th Street, NW, fifth Floor
Washington, DC, 20009
202-671-2405
Diane.Wooden@dc.gov

9. **ATTACHMENTS**

Attachment 1 Aerial images of sites
Attachment 2 Bench and Table Locations
Attachment 3 Concrete pad detail
Attachment 4 Recommended furnishing

General Decision Number: DC100001 01/21/2011 DC1

Superseded General Decision Number: DC20080001

State: District of Columbia

Construction Types: Heavy (Heavy and Sewer and Water Line) and Highway

County: District of Columbia Statewide.

HEAVY CONSTRUCTION PROJECTS (Including Sewer and Water Lines); HIGHWAY CONSTRUCTION PROJECTS

Modification Number	Publication Date
0	03/12/2010
1	03/19/2010
2	04/23/2010
3	05/07/2010
4	06/11/2010
5	07/09/2010
6	07/23/2010
7	08/20/2010
8	09/24/2010
9	11/05/2010
10	12/10/2010
11	12/24/2010
12	01/07/2011
13	01/21/2011

ASBE0024-001 10/01/2009

	Rates	Fringes
Asbestos Worker/Heat and Frost Insulator Includes the application of all insulating materials, protective coverings, coatings and finishes to all types of mechanical systems	$ 30.43	14.43

ASBE0024-002 10/01/2009

	Rates	Fringes
HAZARDOUS MATERIAL HANDLER		

Includes preparation,
wetting, stripping,
removal, scrapping,
vacuuming, bagging and
disposing of all
insulation materials,
whether they contain
asbestos or not, from
mechanical systems.....$ 18.85 7.10

ASBE0024-005 10/01/2009

	Rates	Fringes
Fire Stop Technician.....	$ 24.10	6.94

Includes the application of materials or devices within or around penetrations and openings in all rated wall or floor assemblies, in order to prevent the pasage of fire, smoke of other gases. The application includes all components involved in creating the rated barrier at perimeter slab edges and exterior cavities, the head of gypsum board or concrete walls, joints between rated wall or floor components, sealing of penetrating items and blank openings.

BOIL0193-001 10/01/2009

	Rates	Fringes
Boilermakers:.....	$ 37.66	16.36

BRDC0001-001 05/03/2010

	Rates	Fringes
Bricklayer.....	$ 27.21	7.21

BRMD0001-004 04/25/2010

	Rates	Fringes
BRICKLAYER		
Refractory (Firebrick).....	$ 33.55	7.72

CARP0132-001 05/01/2010

	Rates	Fringes
Carpenter/Lather.....	$ 26.38	7.00
Piledriver.....	$ 24.48	7.80

CARP1831-001 04/01/2010

	Rates	Fringes
Carpenters:		
Millwrights	$ 27.91	10.90

CARP2311-002 05/01/2009

	Rates	Fringes
DIVER TENDER	$ 24.48	7.80
DIVER	$ 36.13	7.80

ELEC0026-001 06/01/2010

	Rates	Fringes
Electricians	$ 39.02	12.82+a

a. PAID HOLIDAYS: New Year's Day, Martin Luther King Jr.'s Birthday, Inauguration Day, Memorial Day, Fourth of July, Labor Day, Veterans Day, Thanksgiving Day, the day after Thanksgiving and Christmas Day or days designated as legal holidays by the Federal Government.

ELEC0026-008 07/01/2003

	Rates	Fringes
Motor Repairmen		
Removal and reinstallation of electrical motors	$ 23.69	7.73+3%+a

a. PAID HOLIDAYS:
New Year's Day, Martin Luther King Jr.'s Birthday, Inauguration Day, Memorial Day, Fourth of July,Labor Day, Veterans Day,Thanksgiving Day, the day after Thanksgiving and Christmas Day or days designated as legal holidays by the Federal Government.

ELEC0070-001 05/04/2009

	Rates	Fringes
Line Construction:		
Cable Splicers	$ 30.06	18.75%+4.75
Equipment Mechanic	$ 21.82	19.75%+4.81
Equipment Operators	$ 30.06	18.75%+4.75

Groundman/Truck Driver	$ 15.34	19.75%+4.81
Line Truck with Auger	$ 20.09	19.75%+4.81
Linemen	$ 30.06	18.75%+4.75

ENGI0077-001 05/01/2010

	Rates	Fringes
Power equipment operators: (HEAVY AND HIGHWAY CONSTRUCTION)		
GROUP 1	$ 32.09	7.87+a+b
GROUP 2	$ 31.09	7.87+a+b
GROUP 3	$ 30.63	7.87+a
GROUP 4	$ 29.92	7.87+a
GROUP 5	$ 27.89	7.87+a
GROUP 6	$ 23.35	7.87+a
GROUP 7	$ 32.46	7.87+a

POWER EQUIPMENT OPERATORS CLASSIFICATIONS

GROUP 1: Tower Cranes and Cranes 100 ton and over.

GROUP 2: 35 ton cranes & above, tower & climbing cranes, derricks, concrete boom pump, drill rigs (equivalent to L & Double L), mole.

GROUP 3: Backhoes, cableways, cranes, cherry pickers, elevating graders, hoists, paving mixers, power shovels,tunnel shovels. batch plants, shields, tunnel mining machines, gradalls, front end loaders, 3 1/2 cu. yds. and above, power driven wheel scoops and scrapers (50 cu. yds. struck capacity or above), rail tamper, draglines, boomcat, mucking machines, graders in tunnels, pile driving engines.

GROUP 4: Front end loaders below 3 1/2 cu. yds, boom trucks, hydraulic backhoes 1/2 yds. capacity or below rubber or track mounted, tug boats, power driven wheel scoops & scrapers, blade graders, motor graders, bulldozers, trenching machines, concrete mixer, speed swing pettibone, ballast regulator, concrete pump, mechanic, welder, mechanic welder, shotcrete machines, Hoeram, locomotive (standard, narrow gauge), tuggers.

GROUP 5: High lifts above 10 feet, boilers (skelton), asphalt spreaders, bullfloat finishing machines, concrete finishing machines, concrete spreaders, fine graders, air compressors, welding machines, pumps, generators, well points, deep wells, hydraulic pumps, elevators, freeze

uniits, tunnel motorman or dinky operator, roller, conveyors, well drilling machines, grout pump, fireman.

GROUP 6: Fork lifts, ditch witch, bobcat 1/3 cu. yd. and below, space heaters, sweepers, assistant engineers, oilers.

GROUP 7: Master mechanic.

a. PAID HOLIDAYS: New Years Day, Inaugural Day, Decoration Day, Independence Day, Labor Day, Martin Luther King's Birthday, Veterans' Day, Thanksgiving Day, Friday after Thanksgiving and Christmas Day.

b. PREMIUM PAY:
Tower crane and cranes 100-ton and over to receive $1.00 per hour premium over Group One.

ENGI0077-002 06/01/2010

	Rates	Fringes
Power equipment operators: (PAVING AND INCIDENTAL GRADING)		
GROUP 1	$ 25.29	6.30
GROUP 2	$ 22.40	6.30
GROUP 3	$ 19.24	6.30
GROUP 4	$ 17.40	6.30
GROUP 5	$ 25.88	6.10

POWER EQUIPMENT OPERATORS CLASSIFICATIONS

GROUP 1: Gradall operator, Crane.
GROUP 2: Boom Truck, Milling Machine, Excavator, Rubber Tire Backhoe, Asphalt Paver, Asphalt Plant Engineer, Motor Grader, Track Loader, Rubber Tire Loader, Track Dozer, Concrete Paver.
GROUP 3: Broom Truck, Asphalt Roller.
GROUP 4: Air Compressor, Grade Rollers.
GROUP 5: Mechanic.

ENGI0077-003 07/01/2009

	Rates	Fringes
Power equipment operators: (SEWER, GAS AND WATER LINE CONSTRUCTION)		
GROUP 1	$ 22.48	6.12+a
GROUP 2	$ 22.08	6.12+a
GROUP 3	$ 21.57	6.12+a

GROUP 4.....$ 21.25 6.12+a
GROUP 5.....$ 20.43 6.12+a

POWER EQUIPMENT OPERATORS CLASSIFICATIONS

GROUP 1: Excavators, Cranes, Gradalls.

GROUP 2: Backhoes, Front-end Loaders, Fork alift/Lull, Bulldozers, Motor Graders. Qualified Mechanics, Hydraulic Tamper and Hoe Pack, Paving Mixers, Pile Driving Engines, Batch Plant, Concrete Pumps, Low-Boy Driver, Lube Truck.

GROUP 3: Trenching Machine, Well Drilling Machines, Concrete Mixers, Motor Graders, Truck Driver.

GROUP 4. Roller, Air Compressors, Pumps, Welding Machines, Well Points, Firemen.

GROUP 5: Oiler

a.PAID HOLIDAYS: New Year's Day, Inaugural Day, Washington's Birthday, Decoration Day, Independence Day, Labor Day, Veterans Day, Thanksgiving Day, Christmas Day and Martin Luther King's Birthday.

IRON0005-001 06/01/2009

	Rates	Fringes
Ironworkers:		
Structural, Ornamental and Chain Link Fence	$ 28.83	13.295

IRON0201-001 05/01/2009

	Rates	Fringes
Ironworkers:		
Reinforcing	$ 25.20	14.33

---

* LABO0657-003 06/01/2010

	Rates	Fringes
Laborers: (HEAVY AND HIGHWAY AND SEWER & WATER LINES CONSTRUCTION)		
GROUP 1	$ 21.64	5.97
GROUP 2	$ 21.98	5.97
GROUP 3	$ 22.16	5.97

GROUP 4	$ 22.33	5.97
GROUP 5	$ 22.80	5.97
GROUP 6	$ 23.39	5.97
GROUP 7	$ 23.96	5.97
GROUP 8	$ 24.73	5.97

LABORERS CLASSIFICATIONS:

GROUP 1: Carloaders, choker setter, concrete crewman, crushed feeder, demolition laborers, including salvaging all material, loading, cleaning up, wrecking, dumpmen, flagmen, fence erector and installer (other than chain link), including installation and erection of fence, guard rails, medial rails, reference posts, guide posts and right-of-way markers, form strippers, general laborers, railroad track laborers, riprap man, scale man, stake jumper, structure mover, includes foundation, separation, preparation, cribbing, shoring, jacking and unloading of structures, water nozzleman, timber bucker and faller, truck loader, water boys, tool room men.

GROUP 2: Combined air and water nozzleman, cement handler, dope pot fireman (nonmechanical), form cleaning machine, mechanical railroad equipment (includes spiker, puller, tile cleaner, tamper, pipe wrapper, power driven wheelbarrows, operators of hand derricks, towmasters, scootcretes, buggymobiles and similar equipment), tamper or rammer operator, trestle scaffold builders over one tier high, power tool operator (gas, electric or pneumatic), sandblast or gunnite tailhose man, scaffold erector, (steel or wood), vibrator operator (up to 4 feet), asphalt cutter, mortar men, shorer and lagger, creosote material handler, corrosive enamel or equl, paver breaker and jackhammer operators.

GROUP 3: Multi-section pipe layer, non-metallic clay and concrete pipe layer (including caulker, collarman, jointer, rigger and jacker, thermal welder and corrugated metal culvert pipe layer.

GROUP 4: Asphalt block pneumatic cutter, asphalt roller, walker, chainsaw operator with attachment, concrete saw (walking), high scalers, jackhammer operator (using over 6 feet of steel), vibrator operator (4 feet and over), well point installer, air trac operator.

GROUP 5: Asphalt screeder, big drills, cut of the hole drills (1 1/2 " piston or larger), down the hole drills (3 1/2" piston or larger) gunnite or sandblaster nozzleman, asphalt raker, asphalt tamper, form setter, demolition torch operator, shotcrete nozzlemen and potman.

GROUP 6: Powderman, master form setters.

GROUP 7: Brick paver (asphalt block paver, asphalt block sawman, asphalt block grinder, hastings block or similar type)

GROUP 8: Licensed powdermen.

---

* LABO0657-004 06/01/2010

	Rates	Fringes
Laborers: (HAZARDOUS WASTE REMOVAL, EXCEPT ON MECHANICAL SYSTEMS: Preparation for, removing and encapsulation of hazardous materials from non-mechanical systems)		
Skilled Asbestos Abatement Laborers	$ 17.82	5.97
Skilled Toxic and Hazardous Waste Removal Laborers	$ 20.97	5.97

---

* LABO0657-005 06/01/2010

	Rates	Fringes
Laborers: (TUNNEL, RAISE & SHAFT (FREE AIR) FOR HEAVY AND SEWER & WATER LINES CONSTRUCTION)		
GROUP 1	$ 22.41	5.97
GROUP 2	$ 23.10	5.97
GROUP 3	$ 24.85	5.97
GROUP 4	$ 25.60	5.97

LABORERS CLASSIFICATIONS:

GROUP 1: Brakeman, Bull Gang, Dumper, Trackmen, Concrete Man.

GROUP 2: Chuck Tender, Powdermen in Prime House, Form Setters and Movers, Nippers, Cableman, Houseman, Groutman, Bell or Signalman, Top or Bottom Vibrator Operator.

GROUP 3: Miners, Re-Bar Underground, Concrete or Gunnite Nozzlemen, Powdermen, Timbermen and Re-Timbermen, Wood Steel Including Liner plate or Other Support, Material Motorman, Caulkers, Diamond Drill Operators, Riggers, Cement Finishers-Underground, Welders and Burners, Shield Driver, Air Trac Operator, Shotcrete Nozzlemen and Potman.

GROUP 4: Mucking Machine Operator (Air).

---

* LABO0657-006 06/01/2010

	Rates	Fringes
Laborers: (TUNNEL, RAISE AND SHAFT (COMPRESSED AIR) FOR HEAVY CONSTRUCTION ONLY		
Gauge Pressure Work Period (Pounds) (Hours)		
1-14 7	$ 28.85	5.97
14-18 6	$ 33.95	5.97

FOOTNOTE: On any requirement for air pressure in excess of 18 PSI, work periods and rates should be negotiated at a pre-bid conference.

---

* LABO0657-007 06/01/2010

	Rates	Fringes
Laborers: (PAVING AND INCIDENTAL GRADING)		
Asphalt Raker & Concrete Saw Operator	$ 18.42	4.90
Asphalt Shoveler	$ 17.84	4.90
Asphalt Tammer & Concrete Shoveler	$ 18.09	4.90
Jack Hammer	$ 18.51	4.90
Laborer	$ 17.70	4.90
Sand Setter & Form Setter	$ 19.10	4.90

---

* LABO0657-008 06/01/2010

	Rates	Fringes
LABORERS (BRICK MASONRY WORK)		
Mason Tenders	$ 15.32	5.97
Scaffold Builders, Mortarmen	$ 16.20	5.97

MARB0002-003 07/01/2010

	Rates	Fringes
Marble & Stone Mason Includes Pointing, Caulking and Cleaning of		

```
     All Types of Masonry,
     Brick, Stone and Cement
     Structures..................$ 32.63            13.94
-----------------------------------------------------------------
* MARB0003-001 05/01/2010

                                   Rates          Fringes

Mosaic & Terrazzo Worker,
Tile Layer
     Marble Mason and Tile Layer.$ 25.29             9.59
     Terrazzo Worker.............$ 26.04             9.59
-----------------------------------------------------------------
* MARB0003-004 05/01/2010

                                   Rates          Fringes

Marble, Tile & Terrazzo
Finisher........................$ 20.48             8.44
-----------------------------------------------------------------
 PAIN0051-001 06/01/2010

                                   Rates          Fringes

Painters:
     All Industrial Work.........$ 27.68             7.86
     Bridges, Heavy Highway,
     Lead Abatement and
     Flame/Thermal Spray.........$ 31.32             7.86
     Commercial and Mold
     Remediation, Painters,
     Wallcovers and Drywall
     Finishers...................$ 24.64             7.86
     Metal Polishing and
     Refinishing.................$ 25.64             7.86
-----------------------------------------------------------------
 PLAS0891-001 05/01/2010

                                   Rates          Fringes

Cement Masons:
     HEAVY CONSTRUCTION ONLY.....$ 27.15             9.58
-----------------------------------------------------------------
 PLAS0891-002 06/01/2007

                                   Rates          Fringes

Cement Masons: (PAVING &
INCIDENTAL GRADING)
     Cement Masons...............$ 17.35             4.35
```

Concrete Saw Operators.....$ 17.35 4.35
Form Setters.....$ 17.35 4.35

PLUM0005-001 08/01/2010

	Rates	Fringes
Plumbers	$ 37.67	14.69+a

a. PAID HOLIDAYS: Labor Day, Veterans' Day, Thanksgiving Day and the day after Thanksgiving, Christmas Day, New Year's Day, Martin Luther King's Birthday, Memorial Day and the Fourth of July.

PLUM0602-005 11/01/2010

	Rates	Fringes
Steamfitter, Refrigeration & Air Conditioning Mechanic	$ 36.87	16.72+a

a. PAID HOLIDAYS: New Year's Day, Martin Luther King's Birthday, Memorial Day, Independence Day, Labor Day, Veterans Day, Thanksgiving Day and the day after Thanksgiving and Christmas Day.

SHEE0100-001 01/01/2011

	Rates	Fringes
Sheet Metal Worker	$ 35.59	13.01

TEAM0639-001 06/01/2010

	Rates	Fringes
Truck drivers: (HEAVY & HIGHWAY CONSTRUCTION)		
Tractor trailer, Low Boy	$ 20.50	2.00+a
Truck Drivers	$ 18.50	2.00+a

a. VACATION: Employees will receive one (1) week's paid vacation after one (1) year of service.

TEAM0639-005 06/01/2009

	Rates	Fringes
Truck drivers: (PAVING & INCIDENTAL GRADING)		

All paving projects where
the grading is incidental
to the paving.....$ 18.00 4.00

WELDERS - Receive rate prescribed for craft performing operation to which welding is incidental.

==========

Unlisted classifications needed for work not included within the scope of the classifications listed may be added after award only as provided in the labor standards contract clauses (29CFR 5.5 (a) (1) (ii)).

In the listing above, the "SU" designation means that rates listed under the identifier do not reflect collectively bargained wage and fringe benefit rates. Other designations indicate unions whose rates have been determined to be prevailing.

WAGE DETERMINATION APPEALS PROCESS

1.) Has there been an initial decision in the matter? This can be:

* an existing published wage determination
* a survey underlying a wage determination
* a Wage and Hour Division letter setting forth a position on a wage determination matter
* a conformance (additional classification and rate) ruling

On survey related matters, initial contact, including requests for summaries of surveys, should be with the Wage and Hour Regional Office for the area in which the survey was conducted because those Regional Offices have responsibility for the Davis-Bacon survey program. If the response from this initial contact is not satisfactory, then the process described in 2.) and 3.) should be followed.

With regard to any other matter not yet ripe for the formal process described here, initial contact should be with the Branch of Construction Wage Determinations. Write to:

Branch of Construction Wage Determinations
Wage and Hour Division
U.S. Department of Labor

200 Constitution Avenue, N.W.
Washington, DC 20210

2.) If the answer to the question in 1.) is yes, then an interested party (those affected by the action) can request review and reconsideration from the Wage and Hour Administrator (See 29 CFR Part 1.8 and 29 CFR Part 7). Write to:

Wage and Hour Administrator
U.S. Department of Labor
200 Constitution Avenue, N.W.
Washington, DC 20210

The request should be accompanied by a full statement of the interested party's position and by any information (wage payment data, project description, area practice material, etc.) that the requestor considers relevant to the issue.

3.) If the decision of the Administrator is not favorable, an interested party may appeal directly to the Administrative Review Board (formerly the Wage Appeals Board). Write to:

Administrative Review Board
U.S. Department of Labor
200 Constitution Avenue, N.W.
Washington, DC 20210

4.) All decisions by the Administrative Review Board are final.

==========

END OF GENERAL DECISION

Government of the District of Columbia

STANDARD CONTRACT PROVISIONS

For Use With
Specifications for
District of Columbia Government
Construction Projects
(Revised January 2007)

PLEASE RETAIN FOR YOUR REFERENCE

INDEX

INSTRUCTIONS TO BIDDERS

PAGE

Qualification of Bidders 5
Bid Documents 5
Examination of Bid 5
Preparation for Bids 5
Error in Bids 5
Labor and Material Not Furnished by District 5
Addenda and Interpretations 6
Alternate Bids 6
Bids for All or Part 6
Price Schedule Interpretation 6
Corrections 6
Bond Requirements 6
A. Bid Guaranty 6
B. Performance Bond 7
C. Payment Bond 7
D. Bond Source 7
Signature to Bids 7
Marking and Mailing Bids 8
Receiving Bids, Modifications or Withdrawals 8
Withdrawal of Bids 8
Opening of Bids 8
Award or Rejection 8
Cancellation of Award 9
Contract and Bond 9

GENERAL PROVISIONS

Definitions 10
Specifications and Drawings 10
Changes 11
A. Designated Change Orders 11
B. Other Change Orders 11
C. General Requirements 11
D. Change Order Breakdown 11

EQUITABLE ADJUSTMENT OF CONTRACT TERMS

Differing Site Conditions 12
Suspension of Work 13

INDEX (Continued)

PAGE

Significant Changes in Character of Work ……... ……...13

Termination-Delays……..……..... ...……...14

Termination for Convenience...……. ... ……15

Disputes…….. …...……...……...…19

Payments to Contractor...……..……. ... ……21

Transfer or Assignment...……... ……21

Material and Workmanship. ……...……...21

Surplus Material Use…….……. ...……..22

District Material…….... ……22

Plant…… ……... ……..22

Capability of Workers…….. ……... ……...22

Conformity of Work and Materials……..……. ...……...23

Unauthorized Work and Materials…… ...……23

Inspection and Acceptance …… ... ……..…23

Superintendence by Contractor …… ... ……...24

Permits and Responsibilities …… ... ……....24

Indemnification …… ... ……..24

Protection Against Trespass ……...……..……... …...……24

Conditions Affecting the Work …… ..... ……..24

A. General …… .... ……24

B. Work and Storage Space ……... ……..24

C. Work on Sundays, Legal Holidays and at Night …… ...……24

D. Existing Features ……... ……24

E. Utilities and Vaults ……... ……..25

F. Site Maintenance ……... ……25

G. Private Work ……...……25

H. District of Columbia Noise Control Act of 1977…… ….……25

Other Contracts …..…… .. ……..25

Patent Indemnity. ……... ……26

Additional Bond Security …… ...……..26

Covenant Against Contingency Fees. …… ...……26

Appointment of Attorney.. ……...……..26

District Employees Not to Benefit...…… ...……..26

Waiver...……...……27

Buy American.. …… ...……27

A. Agreement……... ……27

B. Domestic Construction Material …… ...……27

C. Domestic Component …… ...……..27

D. Foreign Material…… .....……27

Taxes
A. Federal Excise Taxes …… ..……27
B. Sales and Use Taxes …… ……..27
Suspension of Work .....……..28
Safety Program…… ……..28
A. General .....……..28
B. Contractor's Program Submission ...……29
Retention of Records …… ...……29

LABOR PROVISIONS Davis-Bacon Act…..…… ……29
Minimum Wages …….. …….....29
B. Withholding …… .. …...30
C. Payroll and Basic Records …… ..... ……30
Convict Labor ..... ……31
Apprentices and Trainees . ……...31
A. Apprentices ……...……..31
B. Trainees …… ...……31
C. Requirements…… ...……31
Contract Work Hours and Safety Standards Act . ……32
A. Overtime Basis ……...……32
B. Liability for Unpaid Wages …… ...……33
C. Disputes ……...……..……33
D. Violation Penalty …… ... ……33
E. Health and Safety Standards … .....……33
Copeland Act — ……34
A. Definition ……...……..34
B. Weekly Compliance Statement … ...……34
C. Payrolls and Records …… ... ……34
D. Payroll Deductions Not Subject to Secretary of Labor Approval … ...……34
E. Payroll Deductions Subject to Secretary of Labor Approval ……... ……...35
F. Applications for Secretary of Labor Approval …… ...……36
G. Action by Secretary of Labor Upon Applications …… ...……..36
H. Prohibited Payroll Deductions …… .... ……36
I. Methods of Payment of Wages …… ..... ……36
Non-segregated Facilities — Termination and Debarment …… .. ……...37

Form - Weekly Statement of Compliance…… .... ..……...38

Form – Fringe Benefits Statement …… .... ……39

ARTICLE 1. QUALIFICATIONS OF BIDDERS—Bidders shall have the capability to perform classes of work contemplated, have the necessary plant and sufficient capital to execute the work properly within specified time.

Any Bidder who has not performed comparable work for the District within the last 5 years shall submit, at the Contracting Officer's discretion, a certified statement of his organization, plant, manpower, financial resources, and construction experience that he considers will qualify him for proposed contract. This information shall be certified by a Certified Public Accountant for contracts over $25,000 and submitted on the AGC Form "Standard Questionnaires and Financial Statement for Bidders", obtainable from the Associated General Contractors of America, Inc.., at 1957 "B" Street, N. W., Washington, D. C., 20008, or on an approved equivalent form. This requirement is not needed if the bidder has submitted such a statement to the District within a year prior to bid opening date, but will be required if bidder has previously submitted such a statement under-one company name or organization or joint venture and is now bidding under another company name or organization or joint venture. A certified statement of prequalification approval by another jurisdiction may be considered as an alternative to foregoing procedure. A bidder shall submit a supplemental statement if requested by the District.

ARTICLE 2. BID DOCUMENTS—The Specifications (including all documents referenced therein and all documents attached thereto), drawings and addenda which form the basis of any bid shall be considered as part thereof and will form part of the bid. Copies of these documents will be furnished to or made available for the inspection of prospective bidders by that office indicated in the advertisement or invitation.

ARTICLE 3. EXAMINATION OF BID DOCUMENTS AND SITE OF WORK—Each Bidder shall carefully examine the site of the proposed work and the bid documents and fully acquaint himself with conditions relating to construction and labor so that he may fully understand the facilities, difficulties and restrictions attending the execution of the work under the bid documents, and he shall judge for and satisfy himself as to conditions to be encountered affecting the character, quality and quantity of the work to be performed and materials to be furnished arid to the requirements of the bid documents. Failure to do so will be at the Bidder's own risk and shall not relieve him from any obligation under his bid or contract.

ARTICLE 4. PREPARATION FOR BIDS—The bid form furnished in the bid proposal and specifications shall be used in strict compliance with the requirements of the Invitation and Supplemental Instructions to Bidders in the specifications. Special care shall be exercised in the preparation of bids. Bidders must make their own estimates of the facilities and difficulties to be anticipated upon execution of the contract, including local conditions, uncertainty of weather and all other contingencies. All designations and prices shall be fully and clearly set forth in the bid submission. ALL PRICES SHALL BE INSERTED IN FIGURES TYPED OR PRINTED LEGIBLY ON THE BID FORM. All corrections on the bid documents must be initialed by the person signing the bid form.

ARTICLE 5. ERROR IN BIDS—Bidders or their authorized agents are expected to examine all bid documents and any addenda thereto, and all other instructions pertaining to the work which will be open to their inspection. Failure to do so will be at the bidder's own risk, and will not constitute reason for relief on plea of error in the bid. IN CASE OF ERROR IN THE EXTENSION OF PRICES IN THE BID, UNIT PRICES WILL GOVERN.

The bidder must submit his plea of error in writing to the Contracting Officer and must be prepared to document and prove his error.

ARTICLE 6. LABOR AND MATERIAL NOT FURNISHED BY DISTRICT—The District will not furnish any labor, material or supplies unless a provision to do so is included in the contract documents.

ARTICLE 7. ADDENDA AND INTERPRETATIONS—No oral interpretations of the meaning of the drawings, specifications or other bid documents will be made to any bidder. Verbal clarification will not be binding on the District. All requests must be in writing and addressed to the Contracting Officer responsible for administering the contract. Requests for interpretations of bid documents must be received by the Contracting Officer not later than 10 days prior to bid opening date. All changes to the bid documents will be made by addenda mailed to all prospective bidders, who have obtained copies of the bid documents, not later than 7 days before bid opening date. In case of discrepancy among addenda, a later dated addendum has priority over earlier dated addenda. It shall be the bidder's responsibility to make inquiry as to any or all addenda issued, and failure of any prospective bidder to receive any such addenda issued by the Contracting Officer shall not relieve the bidder from any obligation under his bid as submitted. Bidders must acknowledge receipt of all addenda on the Bid Form; failure to do so may result in rejection of bid.. All addenda issued shall become part of the bid and contract documents. -

ARTICLE 8. ALTERNATE BIDS—Alternate bids will not be considered unless called for in the Bid Form.

ARTICLE 9. BIDS FOR ALL OR PART—Where bids are not qualified by specific limitations, the District reserves the right to award all or any of the items according to its best interests.

ARTICLE 10. PRICE SCHEDULE INTERPRETATION—Quantities appearing in the Price Schedule are approximate only and are prepared for the comparison of bids. Payment will be made only for actual material requirements accepted and for work performed and accepted. Schedule quantities may be increased., decreased or omitted and there shall be no adjustment in contract unit prices except as provided, and except for such materials actually purchased or work actually performed prior to notification of the change in items affected.

The price for any item, unless otherwise specified, shall include full compensation for all materials, tests, samples, manufacturers' guaranties, tools, equipment, labor and incidental work needed to complete specified items. Prices without exception shall be net, not subject to discount, and shall include all royalties and costs arising from patents, proprietary items, trademarks and copyrights.

ARTICLE 11. CORRECTIONS—Erasures and other changes in bids must be explained or noted over the signature of the bidder.

ARTICLE 12. BOND REQUIREMENTS

A. BID GUARANTY—On all bids of $100,000.00 or more, security is required to insure the execution of the contract. No bid will be considered unless it is so guaranteed. Each bidder must furnish with his bid either a Bid Bond (Form No. DC 2640-5), with good and sufficient sureties, a certified check payable to the order of the Treasurer of the District of Columbia (uncertified check will not be accepted), negotiable United States bonds (at par value), or an irrevocable letter of credit in an amount not less than five percent (5%) of the amount of his bid, as a guaranty that he Will not withdraw said bid within the period specified therein after the opening of the same; or, if no period be specified, within ninety (90) days after said opening, and will, within the period specified therefore, or, if no period be specified, within ten (10) days, after the prescribed forms are forwarded to him for execution (or within any extension of time which may be granted by the officer to whom the bid was addressed) execute and deliver a written contract on the standard District form in accordance with bid as accepted and give bond with good and sufficient sureties, as specified below for the faithful performance and proper fulfillment of such contract and payment of laborers and material men as required by law or, in the event of the withdrawal of said bid within the period above stated, or the failure to enter into such contract and give such bond within the time above stated, that he will pay to the District the difference between the amount specified in said bid and the amount for which the District may procure the required work, if the latter amount be in excess of the former.

In case security is in the form of a certified check or United States bonds, the District may make such disposition of the same as will accomplish the purpose for which

submitted. Certified checks may be held uncollected at the bidder's risk. Certified checks and United States bonds will be returned to the unsuccessful bidders after award of contract and to successful bidders after the signing of prescribed forms of contract and bonds. Guaranty bonds will be returned only upon written application.

B. PERFORMANCE BOND—For any construction contract exceeding $100,000.00, a Performance Bond (Form No. DC 2640-7) shall be required in a penal amount equal to one hundred percent (100%) of the contract price at time of award. Additional performance bond protection shall be required in connection with any modification effecting an increase in price under any contract for which a bond is required pursuant to the above if:

1. The modification is for new or additional work which is beyond the scope of the existing contract; or,

2. The modification is pursuant to an existing provision of the contract and is expected to increase the contract price by $50,000 or twenty-five percent (25%) of the original total contract price, whichever is less.

The penal amount of the bond protection shall be increased so that the total performance bond protection is one hundred percent (100%) of the contract price as revised by both the modification requiring such additional protection and the aggregate of any previous modification. The increased penal amount may be secured either by increasing the bond protection provided by existing surety or sureties or by obtaining an additional performance bond from a new surety.

C. PAYMENT BOND— In accordance with the provisions of Section 504(b) of the District of Columbia Procurement Practices Act of 1985, payment bonds shall be required in an amount not less than fifty percent (50%) of the total amount payable by the terms of the contract.

Additional payment protection shall be required in connection with any notification effecting an increase in price under any contract for which a bond is required pursuant to the above if —

1. The modification is for new or additional work which is beyond the scope of the existing contract; or

2. The modification is pursuant to an existing provision of the contract and is expected to increase the contract price by $50,000 or twenty-five percent (25%) of the original total contract price, whichever is less.

The penal amount of the additional bond protection shall generally be such that the total payment bond protection is fifty percent (50%) of the contract price as revised by both the modification requiring such additional protection, and the aggregate of any previous modifications. The additional protection may be secured either by increasing the bond protection provided by the existing surety or sureties or by obtaining an additional payment bond from a new surety.

D. BOND SOURCE—The bonds may be obtained from any surety company authorized by the U.S. Treasury Department as acceptable sureties on Federal Bonds and authorized to transact business in the District of Columbia by the Director, Department of Insurance, Securities and Banking.

ARTICLE 13. SIGNATURE TO BIDS—Each bid must show the full business address of the bidder and be signed by him with his usual signature. Bids by partnerships must be signed with the partnership name by one of the members of the partnership or by an authorized representative, followed by the signature and designation of the person signing. Bids by corporations must be signed with the name of the corporation, followed by the signature and

designation of the President or Vice President and attested by the Secretary of the corporation or other persons authorized to bind the corporation and the corporate seal affixed thereto. If bid is signed by other than the President or Vice President, evidence of authority to so sign must be furnished in the form of an extract of minutes. of a meeting of the Board of Directors or extract of bylaws certified by the Corporate Secretary and corporate seal affixed thereto. The names of all persons signing shall be typed or printed below the signatures. A bid by a person who affixes to his signature the word “President”, “Vice President”, “Secretary”, “Agent”, or other designation, without disclosing his principal, may be held personally to the bid. Bids submitted by a joint venture must be signed by all authorized parties to the joint venture.

ARTICLE 14. MARKING AND MAILING BIDS—Bids, addenda acknowledgment, and bid guaranty must be securely sealed in suitable envelopes, addressed and marked on the outside with the name of the bidder, invitation number and date of opening.

ARTICLE 15. RECEIVING BIDS, MODIFICATIONS OR WITHDRAWALS—Bids received prior to the time set for opening will be securely kept unopened. The officer whose duty it is to open them will decide when the specified time has arrived and no bid received thereafter will be considered unless: (1) they are sent by registered mail or by certified mail for which an official dated post office stamp (postmark) on the original Receipt for Certified Mail has been obtained and it is determined by the District that the late receipt was due solely to delay in the mails for which the bidder was not responsible; or (2) if submitted by mail (or by telegram if authorized by the Contracting Officer), it is determined by the District that the late receipt was due solely to mishandling by the District after receipt at the District agency: Provided, that timely receipt. at such agency is established upon examination of an appropriate date or time stamp or other documentary evidence of receipt within the control of such agency.

Bidders using certified mail are cautioned to obtain a receipt for certified mail showing legible, dated postmark and to retain such receipt against the chance that it will be required as evidence that a late bid was timely mailed. The only evidence acceptable in this matter is as follows: (1) where the Receipt of Certified Mail identifies the post office station of mailing, evidence furnished by the bidder which establishes, that the business day of the station ended at an earlier time, in which case the time of mailing shall be deemed to be last minute of the business day; or (2) an entry in ink on the Receipt for Certified Mail showing the time of mailing and the initials of postal employee receiving the item and making the entry, with appropriate written verification of such entry from the post office station of mailing, in which case the time of mailing, shall be the time shown in the entry. If the postmark on the original Receipt for Certified Mail does not show a date, the bid shall not be considered.

The time of mailing of late bids submitted by registered or certified mail shall be deemed to be the last minute of the date shown in the postmark on the registered mail receipt or registered mail wrapper or on the Receipt for Certified Mail unless the bidder furnishes evidence from the post office station of mailing which establishes an earlier time.

No responsibility will attach to the District or any of its officers or employees for the premature opening of a bid not properly addressed and identified. Unless specifically authorized, telegraphic bids will not be considered, but modifications, by telegram, of bids already submitted will be considered if received prior to the hour set for opening, but should not reveal the amount of the original or revised bid.

ARTICLE 16. WITHDRAWAL OF BIDS—Bids may be withdrawn on written or telegraphic request received from bidders prior to the time fixed for opening, provided the name of the bidder appears on the outside of the envelope containing the bid. Negligence on the part of the bidder in preparing the bid confers no right for the withdrawal of the bid after it has been opened.

ARTICLE 17. OPENING OF BIDS—At the time fixed for the opening of bids, their contents will be made public by the Office of Contracting and Procurement for the information of bidders and other properly interested persons.

ARTICLE 18. AWARD OR REJECTION—The Contract will be awarded to the lowest responsible Bidder complying with conditions of the bid documents, provided his bid is reasonable and it is in the best interest of the District to accept it. The Bidder, to whom award is made, will be notified by

the Contracting Officer at the earliest possible date. The District, however, reserves the right to reject any and all bids and to waive any informality in bids received whenever such rejection or waiver is in the best interest of the District.

If more than one bid be offered by any one party, by or in the name of his or their clerk, partner, or other person, all such bids may be rejected. This shall not prevent a Bidder from proceeding under Article 8 hereof, nor from quoting different prices on different qualities of material or different conditions of delivery. A supplier or material man who has quoted prices on materials to a Bidder is not thereby disqualified from quoting to other bidders or from submitting a bid directly for the materials or work.

Each Bidder shall submit a bid on all items in the Price Schedule; failure to bid on all items may result in bid rejection.

In addition to requirements for qualification of bidders as set forth in Article 1 hereof, and as determined by the District, proposals will be considered irregular and may be rejected by the Contracting Officer for any of, but not limited to, the following reasons:

A. Incompetency, inadequate plant or insufficient capital as revealed by Bidder's statement on AGC or equivalent form.

B. Evidence of collusion.

C. Uncompleted work which might hinder or prevent proper and prompt execution and completion of work contemplated.

D. Evidence that Bidder has not adequately considered all aspects of contemplated work.

E. Failure to settle bills satisfactorily, claims and judgments due for labor and material on Bidder's contracts in force on bid opening date.

F. Default under previous contracts.

G. Unacceptable rating as listed on published government lists.

H. Proposal submission on form other than that form furnished by District, or altered or partially detached form.

I. Unauthorized additions, deletions, omissions, conditional bids, or irregularities which may make proposal incomplete or ambiguous in meaning.

J. Failure to acknowledge all addenda issued.

K. Failure to submit bid in the properly labeled receptacle at that location designated as the Office of Contracting and Procurement, Bid Room, Suite 700, 441 4th St., N.W., Washington, D.C. 20001 and prior to the time set for opening as governed by the Official Clock designated as such in that Bid Room.

ARTICLE 19. CANCELLATION OF AWARDS—The right is reserved to the District, without any liability upon the District, to cancel the award of any contract at any time prior to approval of a formal written contract signed by the Contractor and the Contracting Officer.

ARTICLE 20. CONTRACT AND BOND—The Bidder to whom award is made must, when required, enter into a written contract on the standard District form, with satisfactory security in the amount required (see Article 12) within the period specified, or no period be specified, within 10 days alter the prescribed forms are presented to him for signature.

GENERAL PROVISIONS
(Construction Contract)

ARTICLE 1. DEFINITIONS

A. "District" as used herein means the District of Columbia, a municipal corporation.

B. "Mayor" as used herein means the elected head of the District as set forth in Public Law 93-198 dated December 24, 1973, Title 4, Part B, Section 422(1).

C. "Contracting Officer" as used herein means the District official authorized to execute and administrate the Contract on behalf of the District.

D. "Contract Documents" or "Contract" as. used herein means Addenda, Contract Form, Instructions to Bidders, General Provisions, Labor Provisions, Performance and Payment Bonds, Specifications, Special Provisions, Contract Drawings, approved written Change Orders and Agreements required to acceptably complete the Contract, including authorized extensions thereof.

ARTICLE 2. SPECIFICATIONS AND DRAWINGS—The Contractor shall keep on the work site a copy of Contract drawings and specifications and shall at all times give the Contracting Officer access thereto. Anything mentioned in the specifications and not shown on the Contract drawings, or shown on the Contract drawings and not mentioned in the specifications, shall be of like effect as if shown or mentioned in both.

All Contract requirements are equally binding. Each Contract requirement, whether or not omitted elsewhere in the Contract, is binding as though occurring in any or all parts of the Contract. In case of discrepancy:

1. The Contracting Officer shall be promptly notified in writing of any error, discrepancy or omission, apparent or otherwise.

2. Applicable Federal and D. C. Code requirements have priority over: the Contract form, General Provisions, Change Orders, Addenda, Contract drawings, Special Provisions and Specifications.

3. The Contract form, General Provisions and Labor Provisions have priority over: Change Orders, Addenda, Contract drawings, Special Provisions and Specifications.

4. Change Orders have priority over: Addenda, Contract drawings and Specifications.

5. Addenda have priority over: Contract drawings, Special Provisions and Specifications. A later dated Addendum has priority over earlier dated Addenda.

6. Special Provisions have priority over: Contract drawings and other specifications.

7. Shown and indicated dimensions have priority over scaled dimensions.

8. Original scale drawings and details have priority over any other different scale drawings and details.

9. Large scale drawings and details have priority over small scale drawings and details.

10. Any adjustment by the Contractor without a prior determination by the Contracting Officer shall be at his own risk and expense. The Contracting Officer will furnish from time to time such detail drawings and other information as he may consider necessary, unless otherwise provided.

ARTICLE 3. CHANGES

A. DESIGNATED CHANGE ORDERS—The Contracting Officer may, at any time, without notice to the sureties, by written order designated or indicated to be a change order, make any change in the work within the general scope of the Contract, including but not limited to changes

1. In the Contract drawings and specifications;
2. In the method or manner of performance of the work;
3. In the District furnished facilities, equipment, materials or services; or
4. Directing acceleration in the performance of the work.

Nothing provided in this Article shall excuse the Contractor from proceeding with the prosecution of the work so changed.

B. OTHER CHANGE ORDERS—Any other written order or an oral order (which term as used in this Section (B) shall include direction, instruction, interpretation, or determination) from the Contracting Officer which causes any such change, shall be treated as a Change Order under this Article, provided that the Contractor gives the Contracting Officer written notice stating the date, circumstances and sources of the order and that the Contractor regards the order as a Change Order.

C. GENERAL REQUIREMENTS—Except as herein provided, no order, statement or conduct of the Contracting Officer shall be treated as a change under this Article or entitle the Contractor to an equitable adjustment hereunder. If any change under this Article causes an increase or decrease in the Contract's cost of, or the time required for, the performance of any part of the work under this Contract whether or not changed by any order, an equitable adjustment shall be made and the Contract modified in writing accordingly; provided, however, that except for claims based on defective specifications, no claim for any change under (B) above shall be allowed for any cost incurred more than 20 days before the Contractor gives written notice as therein required unless this 20 days is extended by the Contracting Officer and provided further, that in case of defective drawings and specifications, the equitable adjustment shall include any increased cost reasonably incurred by the Contractor in attempting to comply with such defective drawings and specifications.

If the Contractor intends to assert a claim for an equitable adjustment under this Article, he must, within 30 days after receipt of a written Change Order under (A) above or the furnishing of a written notice under (B) above, submit to the Contracting Officer a written statement setting forth the general nature and monetary extent of such claim, unless this period is extended by the Contracting Officer. The statement of claim hereunder may be included in the notice under (B) above.

No claim by the Contractor for an equitable adjustment hereunder shall be allowed if asserted after final payment under the Contract.

D. CHANGE ORDER BREAKDOWN—Contract prices shall be used for Change Order work where work is of similar nature; no other costs, overhead or profit will be allowed.

Where Contract prices are not appropriate and the nature of the change is known in advance of construction, the parties shall attempt to agree on a fully justifiable price adjustment and/or adjustment of completion time.

When Contract prices are not appropriate, or the parties fail to agree on equitable adjustment, or in processing claims, equitable adjustment for Change Order work shall be per this Article and Article 4 and shall be based upon the breakdown shown in following

subsections 1. through 7. The Contractor shall assemble a complete cost breakdown that lists and substantiates each item of work and each item of cost.

1. **Labor—**Payment will be made for direct labor cost plus indirect labor cost such as insurance, taxes, fringe benefits and welfare provided such costs are considered reasonable. Indirect costs shall be itemized and verified by receipted invoices. If verification is not possible, up to 18 percent of direct labor costs may be allowed. In addition, up to 20 percent of direct plus indirect labor costs may be allowed for overhead and profit.

2. **Bond**—Payment for additional bond cost will be made per bond rate schedule submitted to the Office of Contracting and Procurement with the executed Contract.

3. **Materials—**Payment for cost of required materials will be F.O.B. destination (the job site) with an allowance for overhead and profit.

4. **Rented Equipment—**Payment for required equipment rented from an outside company that is neither an affiliate of, nor a subsidiary of, the Contractor will be based on receipted invoices which shall not exceed rates given in the current edition of the Rental Rate Blue Book for Construction Equipment published by Data Quest. If actual rental rates exceed manual rates, written justification shall be furnished to the Contracting Officer for consideration. No additional allowance will be made for overhead and profit. The Contractor shall submit written certification to the Contracting Officer that any required rented equipment is neither owned by nor rented from the Contractor or an affiliate of or subsidiary of the Contractor.

5. **Contractor's Equipment**— Payment for required equipment owned by the Contractor or an affiliate of the Contractor will be based solely on an hourly rate derived by dividing the current appropriate monthly rate by 176 hours. No payment will be made under any circumstances for repair costs, freight and transportation charges, fuel, lubricants, insurance, any other costs and expenses, or overhead and profit. Payment for such equipment made idle by delays attributable to the District will be based on one-half the derived hourly rate under this subsection.

6. **Miscellaneous—**No additional allowance will be made for general superintendence, use of small tools and other costs for which no specific allowance is herein provided.

7. **Subcontract Work—**Payment for additional necessary subcontract work will be based on applicable procedures in 1. through 6., to which total additional subcontract work up to an additional 10 percent may be allowed for the Contractor's overhead and profit.

ARTICLE 4. EQUITABLE ADJUSTMENT OF CONTRACT TERMS

The Contractor is entitled to an equitable adjustment of the contract terms whenever the following situations develop:

Differing Site Conditions:

(1) During the progress of the work, if subsurface or latent physical conditions are encountered at the site differing materially from those indicated in the contract or if unknown physical conditions of an unusual nature, differing materially from those ordinarily encountered and generally recognized as inherent in the work provided for in the contract, are encountered at the site, the Contractor, upon discovering such conditions, shall promptly notify the Contracting Officer in writing of the specific differing conditions before they are disturbed and before the affected work is performed.

(2) Upon written notification, the Contracting Officer will investigate the conditions, and if he/she determines that the conditions materially differ and cause an increase or decrease in the cost or time required for the performance of any work under the contract, an adjustment, excluding loss of anticipated profits, will be made and the contract modified in writing accordingly. The Contracting Officer will notify the Contractor of his/her determination whether or not an adjustment of the contract is warranted.

(3) No contract adjustment which results in a benefit to the Contract will be allowed unless the Contractor has provided the required written notice.

(4) No contract adjustment will be allowed under this clause for any effects caused on unchanged work.

Suspension of Work Ordered by the Contracting Officer:

(1) If the performance of all or any portion of the work is suspended or delayed by the Contracting Officer in writing for an unreasonable period of time (not originally anticipated, customary, or inherent to the construction industry) and the Contractor believes that additional compensation and/or contract time is due as a result of such suspension or delay, the Contractor shall submit to the Contracting Officer in writing a request for equitable adjustment within seven (7) calendar days of receipt of the notice to resume work. The request shall set forth the reasons and support for such adjustment.

(2) Upon receipt, the Contracting Officer will evaluate the Contractor's request. If the Contracting Officer agrees that the cost and/or time required for the performance of the contract has increased as a result of such suspension and the suspension was caused by conditions beyond the control or and not the fault of the contractor, its suppliers, or subcontractors at any approved tier, and not caused by weather, the Contracting Officer will make an adjustment (excluding profit) and modify the contract in writing accordingly. The Contracting Officer will notify the Contract of his/her determination whether or not an adjustment of the contract is warranted.

(3) No contract adjustment will be allowed unless the Contractor has submitted the request for adjustment within the time prescribed.

(4) No contract adjustment will be allowed under this clause to the extent that performance would have been suspended or delayed by any other cause, or for which an adjustment is provided for or excluded under any other term of condition of this contract.

Significant Changes in the Character of Work:

(1) The Contracting Officer reserves the right to make, in writing, at any time during the work, such changes in quantities and such alterations in the work as are necessary to satisfactorily complete the project. Such changes in quantities and alterations shall not invalidate the contract nor release the surety, and the Contractor agrees to perform the work as altered.

(2) If the alterations or changes in quantities significantly change the character of the work under the contract, whether or not changed by any such different quantities or alterations, an adjustment, excluding loss of anticipated profits, will be made to the contract. The basis for the adjustment shall be agreed upon prior to the performance of the work. If a basis cannot be agreed upon, then an adjustment will be made either for or against the Contractor in such amount as the Contracting Officer may determine to be fair and reasonable.

(3) If the alterations or changes in quantities significantly change the character of the work to be performed under the contract, the altered work will be paid for as provided elsewhere in the contract.

(4) The term “significant change” shall be construed to apply only to the following circumstances:

(a) When the character of the work as altered differs materially in kind or nature from that involved or included in the original proposed construction; or

(b) When an item of work is increased in excess of 125 percent or decreased below 75 percent of the original contract quantity. Any allowance for an increase in quantity shall apply only to that portion in excess of 125 percent of original contract item quantity, or in the case of a decrease below 75 percent, to the actual amount of work performed.

ARTICLE 5. TERMINATION-DELAYS—If the Contractor refuses or fails to prosecute the work, or any separable part thereof, with such diligence as will insure its completion within the time specified in the Contract, or any extension thereof, or fails to complete said work within specified time, the District may, by written notice to the Contractor, terminate his right to proceed with the work or such part of the work involving the delay. In such event the District may take over the work and prosecute the same to completion, by contract or otherwise, and may take possession of and utilize in completing the work such materials, appliances, and plant as may have been paid for by the District or may be on the site of the work and necessary therefore. Whether or not the Contractor’s right to proceed with the work is terminated, he and his sureties shall be liable for any liability to the District resulting from his refusal or failure to complete the work within the specified time.

If fixed and agreed liquidated damages are provided in the Contract and if the District does not so terminate the Contractor’s right to proceed, the resulting damage will consist of such liquidated damages until the work is completed or accepted.

The Contractor’s right to proceed shall not be so terminated nor the Contractor charged with resulting damage if:

1. The delay in the completion the work arises from unforeseeable causes beyond the control and without the fault or negligence of the Contractor, including but not restricted to acts of God, acts of the public enemy, acts of the District in either its sovereign or contractual capacity, acts of another contractor in the performance of a contract with the District, fires, floods, epidemics, quarantine restrictions, strikes, freight embargoes, climatic conditions beyond the normal which could be anticipated, or delays of subcontractors or suppliers arising from unforeseeable causes beyond the control and without the fault or negligence of both the Contractor and such subcontractors or suppliers (the term subcontractors or suppliers shall mean subcontractors or suppliers at any tier); and

2. The Contractor, within 10 days from the beginning of any such delay, (unless the Contracting Officer grants a further period of time before the date of final payment under the Contract) notifies the Contracting Officer in writing of the causes of delay.

The Contracting Officer shall ascertain the facts and the extent of the delay and extend the time far completing the work when, in his judgment, the findings of fact justify such an extension, and his findings of fact shall be final and conclusive on the parties, subject only to appeal as provided in Article 7 herein.

If, after notice of termination of the Contractor’s right to proceed under the provisions of this Article, it is determined for any reason that the Contractor was not in default under the provisions of this Article, or that the delay was excusable under the provisions of this Article, the rights and

obligations of the parties shall be in accordance with Article 6 herein. Failure to agree to any such adjustment shall be a dispute concerning a question of fact within the meaning of Article 7 herein.

The rights and remedies of the District provided in this Article are in addition to any other rights and remedies provided by law or under the Contract.

The District may, by written notice, terminate the Contract or a portion thereof as a result of an Executive Order of the President of the United States with respect to the prosecution of war or in the interest of national defense. When the Contract is so terminated, no claim for loss of anticipated profits will be permitted.

ARTICLE 6. TERMINATION FOR CONVENIENCE OF THE DISTRICT

A. The performance of work under the Contract may be terminated by the District in accordance with this Article in whole, or in part, whenever the Contracting Officer shall determine that such termination is in the best interest of the District. Any such termination shall be effected by delivery to the Contractor of a Notice of Termination specifying the extent to which performance of work under the Contract is terminated, and the date upon which such termination becomes effective.

B. After receipt of a Notice of Termination, and except as otherwise directed by the Contracting Officer, the Contractor shall:

1. Stop work under the Contract on the date and to the extent specified in the Notice of Termination.

2. Place no further orders or subcontracts for materials, services, or facilities except as may be necessary for completion of such portion of the work under the Contract as is not terminated.

3. Terminate all orders and subcontracts to the extent that they relate to the performance of work terminated by the Notice of Termination.

4. Assign to the District, in the manner, at the times, and to the extent directed by the Contracting Officer, all of the right, title and interest of the Contractor under the orders and subcontracts so terminated, in which case the District shall have the right, in its discretion, to settle or pay any or all claims arising out of the termination of such orders and subcontracts.

5. Settle all outstanding liabilities and all claims arising out of such termination of orders or subcontracts, with the approval or ratification of the Contracting Officer to the extent he may require, which approval or ratification shall be final for all purposes of this Article.

6. Transfer title to the District and deliver in the manner, at the times, and to the extent, if any, directed by the Contracting Officer

:

a. The fabricated or unfabricated parts, work in progress, completed work, supplies, and other material procured as a part of, or acquired in connection with, the performance of the work terminated by the Notice of Termination, and

b. The completed, or partially completed plans, drawings information and other property which, if the Contract bad been completed, would have been required to be furnished to the District.

7. Use his best efforts to sell, in the manner, at the terms, to the extent, and at the price or prices directed or authorized by the Contracting Officer, any property of the types referred to in 6 above provided, however, that the Contractor:

a. Shall not be required to extend credit to any purchaser, and

b. May acquire any property under the conditions prescribed and at a price or prices approved by the Contracting Officer, and

c. Provided further, that the proceeds of any such transfer or disposition shall be applied in reduction of any payments to be made by the District to the Contractor under the Contract or shall otherwise be credited to the price or cost of the work covered by the Contract or paid in such other manner as the Contracting Officer may direct.

8. Complete performance of such part of the work as shall not have been terminated by the Notice of Termination.

9. Take such action as may be necessary, or as the Contracting Officer may direct, for the protection and preservation of the property related to the Contract which is in the possession of the Contractor and in which the District has or may acquire an interest.

10. The Contractor shall proceed immediately with the performance of the above obligations notwithstanding any delay in determining or adjusting the cost, or any item of reimbursable cost, under this Article.

11. "Plant clearance period" means, for each particular property classification (such as raw materials, purchased parts and work in progress) at any one plant or location, a period beginning with the effective date of the termination for convenience and ending 90 days after receipt by the Contracting Officer of acceptable inventory schedules covering all items of that particular property classification in the termination inventory at that plant or location, or ending on such later date as may be agreed to by the Contracting Officer and the Contractor. Final phase of a plant clearance period means that part of a plant clearance period which occurs alter the receipt of acceptable inventory schedules covering all items of the particular property classification at the plant or location.

At any time after expiration of the plant clearance period, as defined above, the Contractor may submit to the Contracting Officer a list, certified as to quantity and quality, of any or all items of termination inventory not previously disposed of, exclusive of items the disposition of which has been directed or authorized by the Contracting Officer, and may request the District to remove such items or enter into a storage agreement covering them. Not later than 15 days thereafter, the District will accept title to such items and remove them or enter into a storage agreement covering the same; provided, that the list submitted shall be subject to verification by the Contracting Officer upon removal of the items or, if the items are stored, within 45 days from the date of submission of the list, and any necessary adjustments to correct the list as submitted, shall be made prior to final settlement.

C. After receipt of a Notice of Termination, the Contractor shall submit to the Contracting Officer his termination claim, in the form with the certification prescribed by the Contracting Officer. Such claim shall be submitted promptly but in no event later than one year from the effective date of termination, unless one or more extensions in writing are granted by the Contracting Officer upon request of the Contractor made in writing within such one year period or authorized extension thereof. However, if the Contracting Officer determines that the facts justify such action, he may receive and act upon any such termination claim at any time after such one year period or extension thereof. Upon failure of the Contractor to submit his termination claim within the time allowed, the Contracting Officer may, subject to any review required by the District's procedures in effect as of the date of execution of the Contract, determine, on the basis of information available to him, the amount, if any, due to the Contractor by reason of the termination and shall thereupon pay to the Contractor the amount so determined.

D. Subject to the provisions of C above, and subject to any review required by the District's procedures in effect as of the date of execution of the Contract, the Contractor and Contracting Officer may agree upon the whole or any part of the amount or amounts to be paid to the Contractor by reason of the total or partial termination of work pursuant to this Article, which amount or amounts may include a reasonable allowance for profit on work done; provided, that such agreed amount or amounts, exclusive of settlement costs, shall not exceed the total Contract price as reduced by the amount of payments otherwise made and as further reduced by the Contract price of work not terminated. The Contract shall be amended accordingly, and the Contractor shall be paid the agreed amount. Nothing in E below prescribing the amount to be paid to the Contractor in the event of failure of the Contractor and the Contracting Officer to agree upon the whole amount to be paid to the Contractor by reason of the termination of work pursuant to this Article, shall be deemed to limit, restrict or otherwise determine or effect the amount or amounts which may be agreed upon to be paid to the Contractor pursuant to this paragraph.

E. In the event of the failure of the Contractor and the Contracting Officer to agree as provided in D above upon the whole amount to be paid to the Contractor by reason of the termination of work pursuant to this Article, the Contracting Officer shall, subject to any review required by the District's procedures in effect as of the date of execution of the Contract, determine, on the basis of information available to him, the amount, if any, due the Contractor by reason of the termination and shall pay to the Contractor the amounts determined by the Contracting Officer, as follows, but without duplication of any amounts agreed upon in accordance with D above:

1. With respect to all Contract work performed prior to the effective date of the Notice of Termination, the total (without duplication of any items) of:

a. The cost of such work;

b. The cost of settling and paying claims arising out of the termination of work under subcontracts or orders as provided in B 5. above, exclusive of the amounts paid or payable on account of supplies or materials delivered or services furnished by the subcontractor prior to the effective date of the Notice of Termination of work under the Contract, which amounts shall be included in the cost on account of which payment is made under E1.a. above; and

c. A sum, as profit on E.1.a. above, determined by the Contracting Officer to be fair and reasonable; provided however, that if it appears that the Contractor would have sustained a loss on the entire Contract had it been completed, no profit shall be included or allowed under this subparagraph and an appropriate adjustment shall be made reducing the amount of the settlement to reflect the indicated rate of loss; and provided further that profit shall be allowed only on preparations made and work done by the Contractor for the terminated portion of the Contract but may not be allowed on the Contractor's settlement expenses. Anticipatory profits and consequential damages will not be allowed. Any reasonable method may be used to arrive at a fair profit, separately or as part of the whole settlement.

2. The reasonable cost of the preservation and protection of property incurred pursuant to B.9; and any other reasonable cost incidental to termination of work under the Contract including expense incidental to the determination of the amount due to the Contractor as the result of the termination of work under the Contract.

F. The total sum to be paid to me Contractor under E.1. above shall not exceed the total Contract price as reduced by the amount of payments otherwise made and as further reduced by the Contract price of work not terminated. Except for normal spoilage, and except to the extent that the District shall have otherwise expressly assumed the risk of loss, there shall be excluded from the amounts payable to the Contractor under E.1. above, the fair value, as determined by the Contracting Officer, of property which is destroyed, lost, stolen or damaged so as to become undeliverable to the District, or to a buyer pursuant to B.7 above.

G. The Contractor shall have the right of appeal, under Article 7 herein, from any determination made by the Contracting Officer under C. or E. above, except that, if the Contractor has failed to submit his claim within the time provided in C above and has failed to request extension of such time, he shall have no such right of appeal. In any case where the Contracting Officer has made a determination of the amount due under C. or E. above, the District shall pay to the Contractor the following:

1. If there is no right of appeal hereunder or if no timely appeal has been taken, the amount so determined by the Contracting Officer, or

2. If an appeal had been taken, the amount finally determined on such appeal.

H. In arriving at the amount due the Contractor under this Article there shall be deducted:

1. all unliquidated advance or other payments on account theretofore made to the Contractor, applicable to the terminated portion of the Contract;

2. any claim which the District may have against the Contractor in connection with the Contract; and

3. the agreed price for, or the proceeds of sale of, any materials, supplies or other things kept by the Contractor or sold, pursuant to the provisions of this Article and not otherwise recovered by or credited to the District.

I. If the termination hereunder be partial, prior to the settlement of the terminated portion of the Contract, the Contractor may file with the Contracting Officer a request in writing for an equitable adjustment of the price or prices specified in the Contract relating to the continued portion of the Contract (the portion not terminated by the Notice of Termination), and such equitable adjustment as may be agreed upon shall be made at such price or prices; however, nothing contained herein shall limit the right of the District and the Contractor to agree upon the amount or amounts to be paid to the Contractor for the completion of the continued portion of the Contract when said Contract does not contain an established Contract price for such continued portion.

J. The District may from time to time, under such terms and conditions as it may prescribe, make partial payments against costs incurred by the Contractor in connection with the terminated portion of the Contract whenever in the opinion of the Contracting Officer the aggregate of such payments shall be within the amount to which the Contractor will be entitled hereunder. If the total of such payments is in excess of the amount finally agreed or determined to be due under this Article, such excess Shall be payable by the Contractor to the District upon demand, together with interest computed at the rate of 6 percent per annum for the period from the date such excess is received by the Contractor to the date on which such excess is repaid to the District; provided however, that no interest shall be charged with respect to any such excess payment attributable to a reduction in the Contractor's claim by reason of retention or other disposition of termination inventory until ten days after the date of such retention or disposition, or such later date as determined by the Contracting Officer by reason of the circumstances.

K. Unless otherwise provided in the Contract or by applicable statute, the Contractor, from the effective date of termination and for a period of three years after final settlement under the Contract, shall preserve and make available to the District at all reasonable times at the office of the Contractor, but without direct charge to the District, all his books, records, documents and other evidence bearing on the costs and expenses of the Contractor under the Contract and relating to the work terminated hereunder, or, to the extent approved by the Contracting Officer, photographs and other authentic reproductions thereof.

ARTICLE 7. DISPUTES

A. All disputes arising under or relating to this contract shall be resolved as provided herein.

B. Claims by a Contractor against the District.

"Claim", as used in Section B of this clause, means a written assertion by the Contractor seeking, as a matter of right, the payment of money in a sum certain, the adjustment or interpretation of contract terms, or other relief arising under or relating to this contract. A claim arising under a contract, unlike a claim relating to that contract, is a claim that can be resolved under a contract clause that provides for the relief sought by the claimant.

(a) All claims by a Contractor against the District arising under or relating to a contract shall be in writing and shall be submitted to the Contracting Officer for a decision. The contractor's claim shall contain at least the following:

(1) A description of the claim and the amount in dispute;
(2) Any data or other information in support of the claim;
(3) A brief description of the Contractor's efforts to resolve the dispute prior to filing the claim; and
(4) The Contractor's request for relief or other action by the Contracting Officer.
(b) The Contracting Officer may meet with the Contractor in a further attempt to resolve the claim by agreement.
November (2004)
SCP. 9
(c) For any claim of $50,000 or less, the Contracting Officer shall issue a decision within sixty (60) days from receipt of a written request from a Contractor that a decision be rendered within that period.
(d) For any claim over $50,000, the Contracting Officer shall issue a decision within ninety (90) days of receipt of the claim. Whenever possible, the Contracting Officer shall take into account factors such as the size and complexity of the claim and the adequacy of the information in support of the claim provided by the Contractor.
(e) The Contracting Officer's written decision shall do the following:
(1) Provide a description of the claim or dispute;
(2) Refer to the pertinent contract terms;
(3) State the factual areas of agreement and disagreement;
(4) State the reasons for the decision, including any specific findings of fact, although specific findings of fact are not required and, if made, shall not be binding in any subsequent proceeding;
(5) If all or any part of the claim is determined to be valid, determine the amount of monetary settlement, the contract adjustment to be made, or other relief to be granted;
(6) Indicate that the written document is the contracting officer's final decision; and
(7) Inform the Contractor of the right to seek further redress by appealing the decision to the Contract Appeals Board.
(f) Any failure by the Contracting Officer to issue a decision on a contract claim within the required time period will be deemed to be a denial of the claim, and

will authorize the commencement of an appeal to the Contract Appeals Board as authorized by D.C. Official Code § 2-309.04.
(g) (1) If a Contractor is unable to support any part of his or her claim and it is determined that the inability is attributable to a material misrepresentation of fact or fraud on the part of the Contractor, the Contractor shall be liable to the District for an amount equal to the unsupported part of the claim in addition to all costs to the District attributable to the cost of reviewing that part of the Contractor's claim.
(2) Liability under paragraph (g)(1) shall be determined within six (6) years of the commission of the misrepresentation of fact or fraud.
(h) The decision of the Contracting Officer shall be final and not subject to review unless an administrative appeal or action for judicial review is timely commenced by the Contractor as authorized by D. C. Official Code § 2-309.04.
(i) Pending final decision of an appeal, action, or fina l settlement, a Contractor shall proceed diligently with performance of the contract in accordance with the decision of the Contracting Officer.
November (2004)
SCP. 10
C. Claims by the District against a Contractor
(a) Claim as used in Section C of this clause, means a written demand or written assertion by the District seeking, as a matter of right, the payment of money in a sum certain, the adjustment of contract terms, or other relief arising under or relating to this contract. A claim arising under a contract, unlike a claim relating to that contract, is a claim that can be resolved under a contract clause that provides for the relief sought by the claimant.
(b) (1) All claims by the District against a Contractor arising under or relating to a contract shall be decided by the Contracting Officer.
(2) The Contracting Officer shall send written notice of the claim to the Contractor. The Contracting Officer's written decision shall do the following:
(a) Provide a description of the claim or dispute;
(b) Refer to the pertinent contract terms;
(c) State the factual areas of agreement and disagreement;
(d) State the reasons for the decision, including any specific findings of fact, although specific findings of fact are not required and, if made, shall not be binding in any subsequent proceeding;
(e) If all or any part of the claim is determined to be valid, determine the amount of monetary settlement, the contract adjustment to be made, or other relief to be granted;
(f) Indicate that the written document is the Contracting Officer's final decision; and
(g) Inform the Contractor of the right to seek further redress by appealing the decision to the Contract Appeals Board.
(3) The decision shall be supported by reasons and shall inform the Contractor of its rights as provided herein.
(4) The authority contained in this clause shall not apply to a claim or dispute for penalties or forfeitures prescribed by statute or regulation which another District agency is specifically authorized to administer, settle, or determine.
(5) This clause shall not authorize the Contracting Officer to settle, compromise, pay, or otherwise adjust any claim involving fraud.
(c) The decision of the Contracting Officer shall be final and not subject to review unless an administrative appeal or action for judicial review is timely commenced by the Contractor as authorized by D.C. Official Code §2-309.04.
(d) Pending final decision of an appeal, action, or final settlement, the Contractor shall proceed diligently with performance of the contract in accordance with the decision of the Contracting Officer.

ARTICLE 8. PAYMENTS TO CONTRACTOR—The District will pay the contract price or prices as hereinafter provided in accordance with District and Federal regulations.

The District will make progress payments monthly as the work proceeds, or at more frequent intervals as determined by the Contracting Officer, on estimates approved by the Contracting Officer. The Contractor shall furnish a breakdown of the total Contract price showing the amount included therein for each principal category of the work, in such detail as requested, to provide a basis for determining progress payments. In the preparation of estimates the Contracting Officer, at his discretion, may authorize material delivered on the site and preparatory work done to be taken into consideration. Material delivered to the Contractor at locations other than the site may also be taken into consideration:

1. If such consideration is specifically authorized by the Contract;

2. If the Contractor furnishes satisfactory evidence that he has acquired title to such material, that it meets Contract requirements and that it will be utilized on the work covered by the Contract; and

3. If the Contractor furnishes to the Contracting Officer an itemized list.

The Contracting Officer at his/her discretion shall cause to be with held retention in an amount sufficient to protect the interest of the District of Columbia. The amount shall not exceed ten percent (10%) of the partial payment. However, if the Contracting Officer, at any time after 50 percent of the work has been completed, finds that satisfactory progress is being made, he may authorize any of the remaining progress payments to be made in full or may retain from such remaining partial payments less than 10 percent thereof. Also, whenever work is substantially complete, the Contracting Officer, if he considers the amount retained to be in excess of the amount adequate for the protection of the District, at his discretion, may release to the Contractor all or a portion of such excess amount. Furthermore, on completion and acceptance of each separate building, public work, or other division of the Contract, on which the price is stated separately in the Contract, payment may be made therefore without retention of a percentage, less authorized deductions.

All material and work covered by progress payments made shall thereupon become the sole property of the District, but this provision shall not be construed as relieving the Contractor from the sole responsibility for all material and work upon which payments have been made or the restoration of any damaged work, or as waiving the right of the District to require the fulfillment of all of the terms of the Contract.

Upon completion and acceptance of all work, the amount due the Contractor under the Contract shall be paid upon presentation at a properly executed voucher and after the Contractor shall have furnished the District with a release, if required, of all claims against the District arising by virtue of the Contract, other than claims in stated amounts as may be specifically excepted by the Contractor from the operation of the release.

ARTICLE 9. TRANSFER OR ASSIGNMENT—Unless otherwise provided by law, neither the Contract nor any interest therein may be transferred or assigned by the Contractor to any other party without the written consent of the Contracting Officer nor without the written acceptance by the surety on the performance and payment bond securing the Contract of the assignee as the Contractor and the principal on such bond; and any attempted transfer or assignment not authorized by this Article shall constitute a breach of the Contract and the District may for such cause terminate the right of the Contractor to proceed in the same manner as provided in Article 5 herein, and the Contractor and his sureties shall be liable to the District for any excess cost occasioned the District thereby.

ARTICLE 10. MATERIAL AND WORKMANSHIP

A. **GENERAL—**Unless otherwise specifically provided in the Contract, all equipment, material and articles incorporated in the work covered by the Contract shall be new and of the most suitable grade for the purpose intended. Unless otherwise specifically provided in the Contract, reference to any equipment, material, article or patented

process, by trade name, make or catalog number, shall be regarded as establishing a standard of quality and shall not be construed as limiting competition., and the Contractor may use any equipment, material, article or process which, in the judgment of the Contracting Officer, is equivalent to that named unless otherwise specified. The Contractor shall furnish to the Contracting Officer for his approval the name of the manufacturer, the model number, and other identifying data and information respecting the performance, capacity, nature and rating of the mechanical and other equipment which the Contractor contemplates incorporating in the work. Machinery and equipment shall be in proper condition. When required by the Contract or when called for by the Contracting Officer, the Contractor shall furnish to the Contracting Officer for approval full information concerning the material or articles which he contemplates incorporating in the work. When so directed, samples shall be submitted for approval at the Contractor's expense, with all shipping charges prepaid. Machinery, equipment, material, and articles installed or used without required approval shall be at the risk of subsequent rejection and subject to satisfactory replacement at Contractor's expense.

B. SURPLUS MATERIALS USE—Whenever specified in the Contract or authorized by the Contracting Officer that materials become the property of the Contractor, which by reference or otherwise shall include disposal of materials, it is understood that the Contractor accepts such materials "as is" with no further expense or liability to the District. If such material specified in the Contract will have a potential or real interest of value, the Contractor shall make allowance in the Contract to show such value.

C. DISTRICT MATERIAL—No materials furnished by the District shall be applied to any other use, public or private, than that for which they are issued to the Contractor. The full amount of the cost to the District of all materials furnished by the District to the Contractor and for which no charge is made, which are not accounted for by the Contractor to the satisfaction of the Contracting Officer, will be charged against the Contractor and his sureties and may be deducted from any monies due the Contractor, and this charge shall be in addition to and not in lieu of any other liabilities of the Contractor whether civil or criminal. Materials furnished by the District for which a charge is made at a rate mentioned in the specifications will be delivered to the Contractor upon proper requisitions therefore and will be charged to his account.

D. Plant —The Contractor shall at all times employ sufficient tools and equipment for prosecuting the various classes of work to full completion in the manner and time required. The Contractor shall at all times perform work in sufficient light and shall provide proper illumination, including lighting required for night work as directed, as a Contract requirement. All equipment, tools, formwork and staging used on the project shall be of sufficient size and in proper mechanical and safe condition to meet work requirements, to produce satisfactory work quality and to prevent injury to persons, the project or adjacent property. When methods and equipment are not prescribed in the Contract, the Contractor is free to use tools, methods and equipment that he satisfactorily demonstrates will accomplish the work in conformity with Contract requirements.

If the Contractor desires to use a method or type of tool or equipment other than specified in the Contract, he shall request approval to do so; the request shall be in writing and shall include a full description of proposed methods, tools and equipment and reason for the change or substitution. Approval of substitutions and changed methods will be on condition that the Contractor will be fully responsible for producing work meeting Contract requirements. If after trial use of the substituted methods, tools and equipment, the Contracting Officer determines that work produced does not meet Contract requirements, the Contractor shall complete remaining work with specified methods, tools and equipment.

E. CAPABILITY OF WORKERS- All work under the Contract shall be performed in a skillful and workmanlike manner. The Contracting Officer may require the Contractor to remove from the work any such employees as the Contracting Officer deems incompetent, careless, insubordinate, or otherwise objectionable, or whose continued employment on the work is deemed by the Contracting Officer to be contrary to the public interest. Such request will be in writing:

F. CONFORMITY OF WORK AND MATERIALS—All work performed and materials and products furnished shall be in conformity, within indicated tolerances, with lines, grades, cross sections, details, dimensions, material and construction requirements shown or intended by the drawings arid specifications.

When materials, products or work cannot be corrected, written notice of rejection will be issued. Rejected materials, products and work shall be eliminated form the project and acceptably replaced at Contractor's expense. The Contracting Officer's failure to reject any portion of the project shall not constitute implied acceptance nor in any way release the Contractor from Contract requirements.

G. UNAUTHORIZED WORK AND MATERIALS—Work performed or materials ordered or furnished for the project deviating from requirements without written authority, will be considered unauthorized and at Contractor's expense. The District is not obligated to pay for unauthorized work. Unauthorized work and materials may be ordered removed and replaced at Contractor's expense.

ARTICLE 11. INSPECTION AND ACCEPTANCE—Except as otherwise provided in the Contract, inspection and test by the District of material and workmanship required by the Contract shall be made at reasonable times and at the site of the work, unless the Contracting Officer determines that such inspection or test of material which is to be incorporated in the work shall be made at the place of production, manufacture or shipment of such material. To the extent specified by the Contracting Officer at the time of determining to make off-site inspection or test, such inspection or test shall be conclusive as to whether the material involved conforms to Contract requirements. Such off-site inspection or test shall not relieve the Contractor of responsibility for damage to or loss of the material prior to acceptance, nor in any way affect the continuing rights of the District after acceptance of the completed work under the terms of the last paragraph of this Article, except as herein above provided.

The Contractor shall, without charge, replace any material and correct any workmanship found by the District not to conform to Contract requirements, unless in the public interest the District consents to accept such material or workmanship with an appropriate adjustment in Contract price. The Contractor shall promptly segregate and remove rejected material from the premises at Contractor's expense.

If the Contractor does not promptly replace rejected material or correct rejected workmanship, the District:

1. May, by contract or otherwise, replace such material and correct such workmanship and charge the cost thereof to the Contractor, or

2. May terminate the Contractor's right to proceed in accordance with Article 5 herein.

The Contractor shall furnish promptly, without additional cost to the District, all facilities, labor and material reasonably needed for performing such safe and convenient inspection and test as may be required by the Contracting Officer. All inspections and tests by the District shall be performed in such manner as not unnecessarily to delay the work. Special, full size, and performance tests shall be performed as described in the Contract. The Contractor shall be charged with any additional cost of inspection when material and workmanship are not ready for inspection at the time specified by the Contractor.

Should it be considered necessary or advisable by the Contracting Officer at any time before acceptance of the work, either in part or in its entirety, to make an examination of work completed, by removing or tearing out same, the Contractor shall, on request, promptly furnish all necessary facilities, labor and material to do same. If such work is found to be defective or nonconforming in any material respect, due to the fault of the Contractor or his subcontractors, he shall defray all the expenses of such examination and of satisfactory reconstruction. If, however, such work is found to meet the requirements of the Contract, an equitable adjustment shall be made in the Contract price

to compensate the Contractor for the additional services involved in such examination and reconstruction and, if completion of the work has been delayed thereby, he shall, in addition, be granted an equitable extension of time.

Unless otherwise provided in the Contract, acceptance by the District will be made as promptly as practicable after completion and inspection of all work required by the Contract. Acceptance shall be final and conclusive except as regards to latent defects, fraud, or such gross mistakes as may amount to fraud, or as regards the District's rights under any warranty or guaranty.

ARTICLE 12. SUPERINTENDENCE BY CONTRACTOR—The Contractor shall give his personal superintendence to the performance of the work or have a competent foreman or superintendent, satisfactory to the Contracting Officer, on the work site at all times during progress, with authority to act for him.

ARTICLE 13. PERMITS AND RESPONSIBILITIES—The Contractor shall, without expense to the District, be responsible for obtaining any necessary licenses, certificates and permits, and for complying with any applicable Federal, State, and Municipal laws, codes and regulations, in connection with the prosecution of the work. He shall be similarly responsible for all damages to persons or property that occurs as a result of his fault or negligence. He shall take proper safety, health and environmental precautions to protect the work, the workers, the public, and the property of others. He shall also be responsible for all materials delivered and work performed until completion and acceptance of the entire construction work, except for any completed unit of construction thereof which theretofore may have been accepted.

ARTICLE 14. INDEMNIFICATION—The Contractor shall indemnify and save harmless the District and all of its officers, agents and servants against any and all claims or liability arising from or based on, or as a consequence or result of, any act, omission or default of the Contractor, his employees, or his subcontractors, in the performance of, or in connection with, any work required, contemplated or performed under the Contract.

ARTICLE l5. PROTECTION AGAINST TRESPASS—Except as otherwise expressly provided in the Contract, the Contractor is authorized to refuse admission either to the premises or to the working space covered by the Contract to any person whose admission is not specifically authorized in writing by the Contracting Officer.

ARTICLE 16. CONDITIONS AFFECTING THE WORK

A. GENERAL—The Contractor shall be responsible for having taken steps reasonably necessary to ascertain the nature and location of the work, and the general and local conditions which can affect the work and the cost thereof. Any failure by the Contractor to do so will not relieve him from responsibility for successfully performing the work as specified without additional expense to the District. The District assumes no responsibility for any understanding or representation concerning conditions made by any of its officers or agents prior to the execution of the Contract, unless such understanding or representation by the District is expressly stated in the Contract.

B. WORK AND STORAGE SPACE—Available work and storage space designated by the District shall be developed as required by the Contract or restored at completion of the project by the Contractor to a condition equivalent to that existing prior to construction. No payment will be made for furnishing or restoration of any work and storage space. If no area is designated or the area designated is not sufficient for the Contractor's operations, he shall obtain necessary space elsewhere at no expense or liability to the District.

C. WORK ON SUNDAYS, LEGAL HOLIDAYS AND AT NIGHT—No work shall be done at any time on Sundays or legal holidays or on any other day before 7 a.m. or after 7 p.m., except with the written permission of the Contracting Officer and pursuant to the requirements of the Police Requirements of the District.

D. EXISTING FEATURES—Subsurface and topographic information including borings data, utilities data and other physical data contained in the Contract or otherwise available, are

not intended as representations or warranties but are furnished as available information. The District assumes no expense or liability for the accuracy of, or interpretations made from, existing features. The Contractor shall be responsible for reasonable consideration of existing features above and below ground which may affect the project.

E. UTILITIES AND VAULTS—The Contractor shall take necessary measures to prevent interruption of service or damage to existing utilities within or adjacent to the project. It shall be the Contractor's responsibility to determine exact locations of all utilities in the field.

For any underground utility or vault encountered, the Contractor shall immediately notify the Contracting Officer and take necessary measures to protect the utility or vault and maintain the service until relocation by owner is accomplished. No additional payment will be made for the encountering of these obstructions.

In case of damage to utilities by the Contractor, either above or below ground, the Contractor shall restore such utilities to a condition equivalent to that which existed prior to the damage by repairing, rebuilding or otherwise restoring as may be directed, at the Contractor's sole expense. Damaged utilities shall be repaired by the Contractor or, when directed by the Contracting Officer, the utility owner will make needed repairs at the Contractor's expense.

No compensation, other than authorized time extensions, will be allowed the Contractor for protective measures, work interruptions, changes in construction sequence, changes in methods of handling excavation and drainage or changes in types of equipment used, made necessary by existing utilities, imprecise utility or vault information or by others performing work within or adjacent to the project.

F. SITE MAINTENANCE—The Contractor shall maintain the project site in a neat and presentable manner throughout the course of all operations, and shall be responsible for such maintenance until final acceptance by the District Trash containers shall be furnished, maintained and emptied by the Contractor to the satisfaction of the Contracting Officer. Excavated earthwork, stripped forms and all other materials and debris not scheduled for reuse in the project shall be promptly removed from the site.

The Contracting Officer may order the Contractor to clean up the project site at any stage of work at no added expense to the District If the Contractor fails to comply with this order, the Contracting Officer may require the work to be done by others and the costs will be charged to the Contractor.

Upon completion of all work and prior to final inspection, the Contractor shall clean up and remove from the project area and adjacent areas all excess materials, equipment, temporary structures, and refuse, and restore said areas to an acceptable condition.

G. PRIVATE WORK—Except as specifically authorized by the Contracting Officer, the Contractor shall not perform any private work abutting District projects with any labor, materials, tools, equipment, supplies or supervision scheduled for the Contract until all work under the Contract has been completed. Contract materials used for any unauthorized purpose shall be subtracted from Contract amount.

H. DISTRICT OF COLUMBIA NOISE CONTROL ACT OF 1977—The contractor shall be in strict compliance with D.C. Law 2-53, District of Columbia Noise Control Act of 1977 and all provisions thereof. Effective March 16, 1978. 24 D.C.Register 5293.

ARTICLE 17. OTHER CONTRACTS—The District may undertake or award other contracts for additional work and the Contractor shall fully cooperate with such other contractors and District employees and carefully coordinate his own work with such additional work as may be directed by the Contracting Officer. The Contractor shall not commit or permit any act which will interfere with the performance of work by any other contractor or by District employees. The District assumes no liability, other than authorized time extensions, for Contract delays and damages resulting from delays and lack of progress by others.

ARTICLE 18. PATENT INDEMNITY—Except as otherwise provided, the Contractor agrees to indemnify the District and its officers, agents, and employees against liability, including costs and expenses, for infringement upon any Letters Patent of the United States (except Letters Patent issued upon an application which is now or may hereafter be, for reasons of national security, ordered by the Federal Government to be kept classified or otherwise withheld from issue) arising out of the performance of the Contract or out of the use or disposal, by or for the account of the District, of supplies furnished or construction work performed hereunder.

ARTICLE 19. ADDITIONAL BOND SECURITY—If any surety upon any bond furnished in connection with the Contract becomes unacceptable to the District, or if any such surety fails to furnish reports as to his financial condition from time to time as requested by the District, the Contractor shall promptly furnish such additional security as may be required from time to time to protect the interests of the District and of persons supplying labor or materials in the prosecution of the work contemplated by the Contract. Provided that upon the failure of the Contractor to furnish such additional security within ten (10) days after written notice so to do, all payments under the Contract will be withheld until such additional security is furnished.

ARTICLE 20. COVENANT AGAINST CONTINGENT FEES—The Contractor warrants that no person or selling agency has been employed or retained to solicit or secure the Contract upon an agreement or understanding for a commission, percentage, brokerage or contingent fee, excepting bona fide employees or bona fide established commercial or selling agencies maintained by the Contractor for the purpose of securing business. For breach or violation of this warranty, the District shall have the right to terminate the Contract without liability or in its discretion to deduct from the Contract price or consideration, or otherwise recover, the full amount of such commission, percentage, brokerage or contingent fee.

ARTICLE 21. APPOINTMENT OF ATTORNEY—The Contractor does hereby irrevocably designate and appoint the Clerk of the Superior Court of the District of Columbia and his successors in office as the true and lawful attorney of the Contractor for the purpose of receiving service of all notices and processes issued by any court in the District, as well as service of all pleadings and other papers, in relation to any action or legal proceeding arising out of or pertaining to the Contract or the work required or performed hereunder.

The Contractor expressly agrees that the validity of any service upon the said Clerk as herein authorized shall not be affected either by the fact that the Contractor was personally within the District and otherwise subject to personal service at the time of such service upon the said Clerk or by the fact that the Contractor failed to receive a copy of such process, notice, pleading or other paper so served upon the said Clerk, provided that said Clerk shall have deposited in the United States mail, certified and postage prepaid, a copy of such process, notice, pleading or other papers addressed to the Contractor at the address stated in the Contract.

ARTICLE 22. DISTRICT EMPLOYEES NOT TO BENEFIT — Unless a determination is made as provided herein, no officer or employee of the District will be admitted to any share or part of this contract or to any benefit that may arise therefrom, and any contract made by the Contracting Officer or any District employee authorized to execute contracts in which they or an employee of the District will be personally interested shall be void, and no payment shall be made thereon by the District or any officer thereof, but this provision shall not be construed to extend to this contract if made with a corporation for its general benefit. A District employee shall not be a party to a contract with the District and will not knowingly cause or allow a business concern or other organization owned or substantially owned or controlled by the employee to be a party to such a contract, unless a written determination has been made by the head of the procuring agency that there is a compelling reason for contracting with the employee, such as when the District's needs cannot reasonably otherwise be met. (DC Procurement Practices Act of l985, D.C. Law 6-85, D.C. Official Code, section 2-310.01, and Chapter 18 of the DC Personnel Regulations) The Contractor represents and covenants that it presently has no interest and shall not acquire any interest, direct or indirect, which would conflict in any manner or degree with the performance of its services hereunder. The Contractor further covenants not to employ any person having such known interests in the performance of the contract.

ARTICLE 23. WAIVER—No waiver of any breach of any provision of the Contract shall operate as a waiver of such provision or of the Contract or as a waiver of subsequent or other breaches of the same or any other provision of the Contract; nor shall any action or non-action by the Contracting Officer or by the Mayor be construed as a waiver of any provision of the Contract or of any breach thereof unless the same has been expressly declared or recognized as a waiver by the Contracting Officer or the Mayor in writing.

ARTICLE 24. BUY AMERICAN

A. AGREEMENT—In accordance with the Buy American Act (41 USC l0a-l0d), and Executive Order 10582. December 17, 1954 (3 CFR, 1954-58 Comp., p. 230), as amended by Executive Order 11051, September 27,1962 (3 CFR, l059—63 Comp., p. 635), the Contractor agrees that only domestic construction material will be used by the Contractor, subcontractors, material men and suppliers in the performance of the Contract, except for non-domestic material listed in the Contract.

B. DOMESTIC CONSTRUCTION MATERIAL—"Construction material" means any article, material or supply brought to the construction site for incorporation in the building or work. An unmanufactured construction material is a "domestic construction material" if it has been mined or produced in the United States. A manufactured construction material is a "domestic construction material" if it has been manufactured in the United States and if the cost of its components which have been mined, produced, or manufactured in the United States exceeds 50 percent of the cost of all its components. "Component" means any article, material, or supply directly incorporated in a construction material. -

C. DOMESTIC COMPONENT—A component shall be considered to have been "mined, produced, or manufactured in the United States" regardless of its source, in fact, if the article, material or supply in which it is incorporated was manufactured in the United States and the component is of a class or kind determined by the District to be not mined, produced or manufactured in the United States in sufficient and reasonably available commercial quantities and of a satisfactory quality.

D. FOREIGN MATERIAL – When steel materials are used in a project a minimal use of foreign steel is permitted. The cost of such materials can not exceed on-tenth of one percent of the total project cost, or $2,500,000, whichever is greater.

ARTICLE 25. TAXES

A. FEDERAL EXCISE—Materials, supplies and equipment are not subject to the Federal Manufacturer's Excise Tax, if they are furnished or used in connection with the Contract provided that title to such materials, supplies and equipment passes to the District under the Contract. The Contractor shall in such cases furnish his subcontractors and suppliers with a purchaser's certificate in the form prescribed by the U.S. Internal Revenue Service.

B. SALES AND USE TAXES—Materials which are physically incorporated as a permanent part of real property are not subject to District of Columbia Sales and Use Tax. The Contractor shall, when purchasing such materials, furnish his suppliers with a Contractor's Exempt Purchase Certificate in the form prescribed in the Sales and Use Tax Regulations of the District of Columbia. Where the Contractor, subcontractor or material man has already paid the Sales and Use Tax on material, as prescribed above, the Sales and Use Tax Regulations of the District of Columbia permit the Contractor, subcontractor or material man to deduct the sales or use tax on the purchase price of the same on his next monthly return as an adjustment. However, the Contractor, subcontractor or material man must satisfy the Chief Financial Officer for the District of Columbia that no sum in reimbursement of such tax was included in the Contract or else that the District has received a credit under the Contract in an amount equal to such tax.

District of Columbia Sales and Use Tax shall be paid on any material and supplies, including equipment rentals, which do not become a physical part of the finished project. (See District of Columbia Sales and Use Tax Administration Ruling No. 6).

The Contractor, subcontractor,or material supplier shall provide proof of compliance with the provisions of D.C. Law 9-260, as amended, codified in D.C. Code46-103, Employer Contributions, prior to award.

Material and supplies required under contracts relating to Glenn Dale Hospital, Glenn Dale, Maryland, and Children's Center, Laurel, Maryland, are subject to the Maryland State Sales and Use Tax, effective July 1, 1968. BIDDERS SHALL INCLUDE SUCH TAX IN THEIR BIDS. Contracts relating to Department of Corrections, Lorton, Virginia, are subject to the Virginia Retail Sales and Use Tax, effective September 1, 1966, when incorporated in public works contracts 'f the District. BIDDERS SHALL INCLUDE SUCH TAX IN THEIR BIDS.

The Contractor, subcontractor, or material supplier shall provide proof of compliance with the applicable tax filing and licensing requirements set forth in D.C. Code, Title 47, Taxation and Fiscal Affairs, prior to contract award.

ARTICLE 26. SUSPENSION OF WORK—The Contracting Officer may order the Contractor in writing to suspend, delay or interrupt all or any part of the work for such period of time as he may determine to be appropriate for the convenience of the District.

If the performance of all or any part of the work is, for an unreasonable period of time, suspended, delayed or interrupted by an act of the Contracting Officer in the administration of the Contract, or by his failure to act within the time specified in the Contract (or if no time is specified, within a reasonable time), an adjustment will be made for an increase in the cost of performance of the Contract (excluding profit) necessarily caused by such unreasonable suspension, delay or interruption and the Contract modified in writing accordingly. However, no adjustment will be made under this Article for any suspension, delay or interruption to the extent:

1. That performance would have been so suspended, delayed or interrupted by any other cause, including the fault or negligence of the contractor, or

2. For which an equitable adjustment is provided or excluded under any other provision of the Contract.

No claim under this Article shall be allowed:

1. For any costs incurred more than 20 days before the Contractor shall have notified the Contracting Officer in writing of the act or failure to act involved (but this requirement shall no apply as to a claim resulting from a suspension order), and

2. Unless the claim, in an amount stated, is asserted in writing as soon as practicable after the termination of such suspension, delay, or interruption, but not later than the date of final payment under the Contract.

ARTICLE 27. SAFETY PROGRAM

A. GENERAL—In order to provide safety controls for the protection of the life and health of District and Contract employees and the general public; prevention of damage to property, materials, supplies, and equipment; and for avoidance of work interruptions in the performance of the Contract, the Contractor shall comply with all applicable Federal and local laws governing safety, health and sanitation including the Safety Standards, Rules and Regulations issued by the American National Standards, U. S. Department of Labor, U. S. Department of Health and Human Services, D. C. Minimum Wage and Industrial Safety Board and the latest edition of "Manual of Uniform Traffic Control Devices" issued by the Federal Highway Administration.

The Contractor shall also take or cause to be taken such additional safety measures as the Contracting Officer may determine to be reasonably necessary.

The Contractor shall designate one person to be responsible for carrying out the Contractor's obligation under this Article.

The Contractor shall maintain an accurate record of all accidents resulting in death, injury, occupational disease, and/or damage to property, materials, supplies, and equipment incident to work performed under the Contract. Copies of these reports shall be furnished to the Contracting Officer within two working days after occurrence.

The Contracting Officer will notify the Contractor of any noncompliance with the foregoing provisions and the action to be taken. The Contractor shall, after receipt of such notice, immediately take corrective action. Such notice, when delivered to the Contractor or his representative at the site of the work, shall be deemed sufficient for the purpose. If the Contractor fails or refuses to comply promptly, the Contracting Officer may issue an order stopping all or part of the work until satisfactory corrective action has been taken. No part of the time lost due to any such stop orders shall be made the subject of claim for extension of time or for excess costs or damages by the Contractor.

This Article is applicable to all subcontractors used under the Contract and compliance with these provisions by the subcontractors will be the responsibility of the Contractor.

(In Contracts involving work of short duration or of non-hazardous character, the following Section B. will be deleted by Special Provision)

B. CONTRACTOR'S PROGRAM SUBMISSION—Prior to commencement of the work, the Contractor shall:

1. Submit in writing to the Contracting Officer for his approval his program for complying with this Article for accident prevention.

2. Meet with the Contracting Officer's Safety Representative after submission of the above program to develop a mutual understanding relative to the administration of the overall safety program.

ARTICLE 28. RETENTION OF RECORDS—Unless otherwise provided in the Contract, or by applicable statute, the Contractor, from the effective date of Contract completion and for a period of three years after final settlement under the Contract, shall preserve and make available to the District at all reasonable times at the office of the Contractor but without direct charge to the District, all his books, records, documents, and other evidence bearing on the costs and expenses of the Contractor under the Contract.

LABOR PROVISIONS
(Construction Contract)

ARTICLE 1. DAVIS-BACON ACT (40 USC 276a-276a 7) —Each Contractor and subcontractor at any tier contracting for any part of Contract work in excess of $2,000 for construction alteration, and/or repair, including painting and decorating of public buildings and public works and which requires or involves the employment of mechanics and/or laborers shall be subject to the Davis-Bacon Act provisions as follows:

A. MINIMUM WAGES—

1. All mechanics and laborers employed or working upon the site of the work or under the United States Housing Act of 1937 or under the Housing Act of 1949 in the construction or development of the project, will be paid unconditionally and not less often than once a week, and without subsequent deduction or rebate on any account (except such payroll deductions as are permitted by regulations issued by the United States Department of Labor, hereinafter referred to as the Secretary of Labor under the Copeland Act (29 CFR Part 3)), the full amount of wages and bona fide fringe benefits (or cash equivalents thereof) due at time of payment computed at wage rates not less than those contained in the wage determination decision of the Secretary of Labor which is attached hereto and made a part hereof, regardless of any contractual relationship which may be alleged to exist between the contractor and such Laborers and mechanics; and the wage determination decision shall be posted by the contractor at the site of the work in a prominent place where it can be easily seen by the workers. For the purpose of this clause, contributions made or costs reasonably anticipated under section l(b)(2) of the Davis-Bacon Act on behalf of laborers or mechanics are considered wages paid to such laborers or mechanics, subject to the provisions of 29 CFR 5.5(a)(l)(iv). Also for the purpose of this clause; regular contributions made or costs incurred for more than a weekly period under plans, funds, or programs, but covering the particular weekly period, are deemed to be constructively made or incurred during such weekly period.

2. The contracting officer shall require that any class of laborers or mechanics, including apprentices and trainees, which is not listed in the wage determination and which is to be employed under the contract, shall be classified or reclassified conformably to the wage determination and a report of the action taken shall be sent by the Contracting Officer to the Secretary of Labor. In the event the interested parties cannot agree on the proper classification or reclassification of a particular class of laborers and mechanics, including apprentices and trainees, to be used, the question accompanied by the recommendation of the Contracting Officer shall be referred to the Secretary for final determination.

3. The Contracting Officer shall require, whenever the minimum wage rate prescribed in the contract for a class of laborers or mechanics includes a fringe benefit which is not expressed as an hourly wage rate and the contractor is obligated to pay a cash equivalent of such a fringe benefit, an hourly cash equivalent thereof to be established. In the event the interested parties cannot agree upon a cash equivalent of the fringe benefit, the question, accompanied by the recommendation of the Contracting Officer, shall be referred to the Secretary of Labor for determination.

4. If the Contractor does not make payments to a trustee or other third person, he may consider as part of the wages of any laborer or mechanic the amount o any costs reasonably anticipated in providing benefits under a plan or program of a type expressly listed in the wage determination decision of the Secretary of Labor which is a part of this contract: Provided, however, The Secretary of Labor has found, upon the written request of the Contractor, that the applicable standards of the Davis-Bacon Act have been met. The Secretary of Labor may require the

contractor to set aside in a separate account assets for the meeting of obligations under the plan or program.

B. WITHHOLDING.—The Contracting Officer may withhold or cause to be withheld from the contractor so much of the accrued payments or advances as may be considered necessary to pay laborers and mechanics, including apprentices and trainees, employed by the contractor or any subcontractor on the work the full amount of wages required by the contract. In the event of failure to pay any laborer or mechanic, including any apprentice or trainee, employed or working on the site of the work or under the United States Housing Act of 1937 or under the Housing Act of 1949 in the construction or development of the project, all or part of the wages required by the contract, the District may, after written notice to the contractor, sponsor, applicant, or owner, take such action as may be necessary to cause the suspension of any further payment, advance, or guarantee of funds until such violations have ceased.

C. PAYROLLS AND BASIC RECORDS. —

1. Payrolls and basic records relating thereto will be maintained during the course of the work and preserved for a period of three years thereafter for all laborers and mechanics working at the site of the work, or under the United States Housing Act of 1937, or under the Housing Act of 1949, in the construction or development of the project. Such records will contain the name and address of each such employee, his correct classification, rates of pay. (including rates of contributions or costs anticipated of the types described in section l(b)(2) of the Davis-Bacon Act), daily and weekly number of hours worked, deductions made and actual wages paid. Whenever the Secretary of Labor has found under 29 CFR 5.5(a)(l) (iv) that the wages of any laborer or mechanic include the amount of any costs reasonably anticipated in providing benefits under a plan or program described in section l(b)(2)(B) of the Davis-Bacon Act, the contractor shall maintain records which show that the commitment to provide such benefits in enforceable, that the plan or program is financially responsible, and that the plan or program has been communicated in writing, to the laborers or mechanics affected, and records which show the costs anticipated or the actual cost incurred in providing such benefits.

2. The contractor will submit weekly a copy of all payrolls to the Contracting Officer if the agency is a party to the contract, but if the agency is not such a party the contractor will submit the payrolls to the applicant, sponsor, or owner, as the case may be, for transmission to the Contracting Officer. The copy shall be accompanied by a statement signed by the employer or his agent indicating that the payrolls are correct and complete, that the wage rates contained therein are not less than those determined by the Secretary of Labor and that the classifications set forth for each laborer or mechanic conform with the work he performed. A submission of a "Weekly Statement of Compliance" which is required under this contract and the Copeland regulations of the Secretary of Labor (29 CFR, Part 3) and the filing with the initial payroll or any subsequent payroll of a copy of any findings by the Secretary of Labor under 29 CFR 5.5(a)(1)(iv) shall satisfy this requirement. The prime contractor shall be responsible for the submission of copies of payrolls of all subcontractors. The contractor will make the records required under the labor standards clauses of the contract available for inspection by authorized representatives of the District and the Department of Labor, and will permit such representatives to interview employees during working hours on the job. Contractors employing apprentices or trainees under approved programs shall include a notation on the first weekly certified payrolls submitted to the Contracting Officer that their employment is pursuant to an approved program and shall identify' the program.

ARTICLE 2. CONVICT LABOR (18 USC 438)—Convict labor shall not be used on Contract work unless otherwise provided by law.

ARTICLE 3. APPRENTICES AND TRAINEES

A. APPRENTICES—Apprentices shall be permitted to work as such only when they are registered, individually, under a bona fide apprenticeship program registered with the Apprenticeship Council, D.C. Department of Labor. The allowance ratio of apprentices to journeymen in any craft classification shall not be greater than the ratio permitted to the Contractor a to his entire work force under the registered program. Any employee listed on a payroll at an apprentice wage rate, who is not a trainee as defined in Section B. of this Article or is not registered as above, shall be paid the wage rate determined by the Secretary of Labor or the classifications of work he actually performed. The Contractor and Subcontractor shall furnish to the Contracting Officer written evidence of the registration of his appropriate ratios and wage rates for the areas of construction, prior to using any apprentice on the Contract.

B. TRAINEES—Trainees will be permitted to work as such when they are bona fide trainees employed pursuant to a program approved by the Contracting Officer and Apprenticeship Council, D.C. Department of Labor.

C. REQUIREMENTS—The Contractor agrees to hire for the performance of the Contract a number of apprentices or trainees or both, in each occupation, which bears to the average number of the journeymen in that occupation to be employed in the performance of the Contract the applicable ratios as determined by the Apprenticeship Council, 0. C. Department of Labor.

1. The Contractor shall assure that 25 percent of such apprentices or trainees in each occupation are in their first year of training, when feasible. Feasibility here involves a consideration of:

a. The availability of training opportunities for first year apprentices;

b. The hazardous nature of the work for beginning workers;

c. Excessive unemployment of apprentices in their second and subsequent years of training.

2. The Contractor shall maintain records of employment, by trade, of the number of apprentices and trainees, apprentices and trainees by first year of training, and of journeymen, and the wages paid and hours of work of such apprentices, trainees and journeymen. The Contractor shall make these records available for inspection upon request of the Contracting Officer and the Apprenticeship Council, 0. C. Department of Labor.

3. The Contractor who claims compliance based on the criterion stated in 29 CFR5.a. agrees to maintain records of employment as described in 29 CFR5.a..3(a)(2) on non-governmental and non-governmentally assisted construction work done during the performance of the Contract in the same labor market area. The Contractor shall make these records available for inspection upon request of the Contracting Officer and the Apprenticeship Council, D. C. Department of Labor.

4. The Contractor agrees to supply one copy of the written notices as required in accordance with 29 CFR. 5.a.4(c) at the request of the Contracting Officer. The Contractor shall supply at 3 month intervals during performance of the Contract and after completion of the Contract performance a statement containing a breakdown by craft of hours worked and wages paid for first year apprentices and trainees, other apprentices and trainees, and journeymen. Two copies of the statement shall be submitted to the Contracting Officer, who will submit a copy to the Apprenticeship Council, D. C. Department of Labor.

5. Section 5, D. C. Law 2—156, AC] 2—325, dated December 29, 1978, is hereby incorporated as part of this Amendment as follows:

> "All prime contractors and subcontractors who contract with the District of Columbia Government to perform construction or renovation work with a single contract or cumulative contracts of at least $500,000, let within a twelve (12) month period, shall be required to register an apprentice.—ship program with the District of Columbia Apprenticeship Council." 25 D.C. Register 6991.

ARTICLE 4. CONTRACT WORK HOURS AND SAFETY STANDARDS ACT (40 USC 327- 330)

A. OVERTIME BASIS—Each Contractor and subcontractor at any tier contracting for any part of Contract work which may require or involve the employment of laborers, mechanics, watchmen or guards, apprentices or trainees shall not require or permit any laborer, mechanic, watchman or guard, apprentice or trainee in any workweek in which he is employed on such work, to work in excess of eight (8) hours in any calendar day or in excess of forty (40) hours in such workweek unless such laborer, mechanic, watchman or guard, apprentice or trainee receives compensation at a rate not less than one and one—half times his basic rate of pay for all hours worked in excess of eight (8) hours in any calendar day or in excess of forty (40) hours in such workweek, as the case may be.

B. LIABILITY FOR UNPAID WAGES—In the event of violation of the provisions of Section A, the Contractor and any subcontractor responsible therefore shall be liable to any affected employee for his unpaid wages. In addition, such Contractor and subcontractor shall be liable to the District for Liquidated damages. Such liquidated damages shall be computed with respect to each individual laborer, mechanic, watchman or guard, apprentice or trainee employed in violation of any provision of Section A, in the awn of $10 for each calendar day on which such employee was required or permitted to work in excess of eight (8) hours or in excess of the standard workweek of forty (40) hours without payment of the overtime wages required by Section A.

The Contracting Officer may withhold or cause to be withheld from the Contractor such sums as administratively determined to satisfy any liability of the Contractor and subcontractors for unpaid wages and liquidated damages as herein provided. In the event of failure to pay any laborer, mechanic, watchman, or guard, apprentice or trainee employed or working on the work site, all or part of the wages required by the Contract, the Contracting Officer may, after written notice to the Contractor, take such action as may be necessary to cause the suspension of any further payment, advance or guarantee of funds until such violations have ceased.

C. DISPUTES—Any Contractor or subcontractor aggrieved by the withholding of a sum as liquidated damages as provided shall have the right, within sixty (60) days thereafter, to appeal to the Contracting Officer in the case of liquidated damages withheld for the use and benefit of the District. The Contracting Officer shall have authority to review the administrative determination of liquidated damages and to issue a final order affirming such determination; or if it is found that the sum determined is incorrect or that the Contractor or subcontractor violated these Labor Provisions inadvertently notwithstanding the exercise of due care on his part and that of his agents, recommendations may be made to the Secretary of Labor that an appropriate adjustment in liquidated damages be made, or that the Contractor or subcontractor be relieved of liability for such liquidated damages. The Secretary will review all pertinent facts in the matter and may conduct such investigation as he deems necessary so as to affirm or reject the recommendation. The decision of the Secretary shall be final. In all such cases in which a Contractor or subcontractor may be aggrieved by a final order for the withholding of liquidated damages as herein before provided, the Contractor or subcontractor may, within sixty (60) days after such final order, file a claim per Article 7 of the General Provisions, provided, however, that final orders of the Contracting Officer or the Secretary of Labor as the case may be, shall be conclusive with respect to findings of fact if such findings are supported by substantial evidence.

D. VIOLATION PENALTY—If the Contractor or subcontractor who employs, directs & controls any laborer or mechanic employed in the performance of any work contemplated by the Contract, shall intentionally violate any provision herein, he shall be deemed guilty of a misdemeanor, and for each and every such offense shall, upon conviction, be punished by a fine of not to exceed $1,000 or by imprisonment for not more than six (6) months, or by both such fine and imprisonment, in the discretion of the court having jurisdiction thereof (Section 106 Title 1, P.L. 87—851, 40 USC Sec. 332, 76 Stat. 359).

E. HEALTH AND SAFETY STANDARDS—It is a condition. of the Contract, and shall be made a condition of each subcontract under the Contract, that the Contractor and any subcontractor shall not require any laborer or mechanic employed in performance of the Contract to work in surroundings or wider working condition which are unsanitary, hazardous, or dangerous to his health or safety, as determined under construction safety and health standards per 29 CFR Part 1518.

The Secretary of Labor is authorized to make such inspections, hold such hearings, issue such orders, and make such decisions based on findings of fact, as are deemed necessary to gain compliance with this Section and any health and safety standard promulgated by the Secretary. In the event that the Secretary of Labor determines non-compliance under the provisions of this Section after an opportunity for an adjudicatory hearing by the Secretary of any condition of the Contract, the District shall have the right to cancel the Contract, and to enter into other contracts for the completion of the Contract work, charging any additional cost to the Contractor.

ARTICLE 5. COPELAND ACT (18 USC 874, and 40 USC 276c) - Each Contractor and subcontractor at any tier contracting for any part of Contract work in excess of $2,000.0O shall be subject to the Copeland Act provisions as follow:

A. DEFINITION—As used in this Article, the term “employee” shall not apply to persons in classifications higher than that of laborer or mechanic and those who are the immediate supervisors of such employees.

B. WEEKLY COMPLIANCE STATEMENT—The Contractor and each subcontractor engaged in the construction, prosecution, completion or repair of any public building or public work shall furnish each week a statement with respect to the wages paid each of his employees engaged on work covered by these Labor Provisions during the preceding weekly payroll period. The statement shall be executed by the Contractor or subcontractor, or by an authorized officer or employee of the Contractor or subcontractor, who supervises the payment of wages, and shall be on the form attached at the end of these Labor Provisions and entitled ‘Weekly Statement of Compliance” (Form No. DC 2640-11).

Each weekly statement required shall be delivered by the Contractor or subcontractor, within seven (7) days after regular payment date of the payroll period, to a representative of the Contracting Officer in charge at the site of the building or work. After each examination and check as may be made, such statement, or copy thereof, shall be kept available, or shall be transmitted together with a report of any violation, in accordance with applicable procedures prescribed by the US. Department of Labor.

Upon a written finding by the Contracting Officer, the Secretary of Labor may provide reasonable limitations, variations, tolerances and exemptions from the requirements of this Section subject to such conditions as the Secretary of Labor may specify.

C. PAYROLLS AND RECORDS—The Contractor and each subcontractor shall preserve his weekly payroll records for a period of three (3) years from date of completion of the Contract. The payroll records shall set out accurately and completely the name, address- and Social Security Number of each laborer and mechanic, his correct classification, rate of pay, daily and weekly number of hours worked, deductions made, and actual wages paid. Such payroll records shall be made available at all times for inspection by the Contracting Officer, and by authorized representatives of the U.S. Department of Labor.

D. PAYROLL DEDUCTIONS NOT SUBJECT TO SECRETARY OF LABOR APPROVAL— Deductions made under the circumstances or in the situations described in paragraphs of this Section may be made without application to and approval at the Secretary of Labor:

1. Any deduction made in compliance with the requirements of Federal, State, or local law, such as Federal or State withholding income taxes and Federal social security taxes.

2. Any deduction of sums previously paid to the employee as a bona fide prepayment of wages when such prepayment is made without discount or interest. A "bona fide prepayment of wages" is considered to have been made only when cash or its equivalent has been advanced to the person employed in such manner as to give him complete freedom of disposition of the advanced funds.

3. Any deduction of amounts required by court process to be paid to another, unless the deduction is in favor of the Contractor, subcontractor, or any affiliated person, or when collusion or collaboration exists.

4. Any deduction constituting a contribution on behalf of the person employed to funds established by the employer, or representatives of employees, or both, for the purpose of providing either from principal or income, or both, medical or hospital care, pensions or annuities or retirement, death benefits, compensation for injuries, illness, accidents, sickness, or disability, or for insurance to provide any of the foregoing, or unemployment benefits, vacation pay, savings accounts, or similar payments for the benefit of employees, their families and dependents: Provided, however, that the following standards are met:

a. The deduction is not otherwise prohibited by law;

b. it is either voluntarily consented to by the employee in writing and in advance of the period in which the work is to be done and such consent is not a condition either for the obtaining of or for the continuation of employment, or provided for in a bona fide collective bargaining agreement between the Contractor or subcontractor and representatives of his employees;

c. No profit or other benefit is otherwise obtained, directly or indirectly, by the Contractor or subcontractor or any affiliated person in the form of commission, dividend, or otherwise; and

d. The deductions - shall serve the convenience and interest of the employee.

5. Any deduction contributing toward the purchase of United States Defense Stamps and Bonds when voluntarily authorized by the employee.

6. Any deduction requested by the employee to enable him to repay loans to or to purchase shares in credit unions organized and operated in accordance with Federal, State and District credit union statutes.

7. Any deduction voluntarily authorized by the employee for the making of contributions to governmental or quasi-governmental agencies, such as the American Red Cross.

8. Any deduction voluntarily authorized by the employee for the making of contributions to Community Chests, United Givers Funds, and similar charitable organizations.

9. Any deduction to pay regular union initiation fees and membership dues, not including fines or special assessments; provided, however, that a collective bargaining agreement between the Contractor or subcontractor and representatives of his employees provides for such deductions and the deductions are not otherwise prohibited by law.

10. Any deduction not more than for the "reasonable cost" of. board, lodging, or other facilities meeting the requirements of Section 3(m) of the Fair Labor Standards Act of 1938, as amended, and Part 531 of said title. When such a deduction is made the additional records required under 516.25(a) of this title shall be kept.

E. PAYROLL. DEDUCTIONS SUBJECT TO SECRETARY OF LABOR APPROVAL—The Contractor and any subcontractor may apply to the Secretary of Labor for permission to make any deduction not permitted under Section D. The Secretary may grant permission whenever be finds that:

1. The Contractor, subcontractor or any ai1iated person does not make a profit or benefit directly from the deduction, either in the form of a commission, dividend or otherwise;

2. The deduction, is not otherwise prohibited by law;

3. The deduction is either:

a. voluntarily consented to by the employee in writing and in advance of the period in which the work is to be done and such consent is not a condition either for the obtaining of employment or its continuance, or

b. provided for in a bona fide collective bargaining agreement between the Contractor or subcontractor and representatives of its employees; and

4. The deduction services the convenience and interest of the employee.

F. APPLICATIONS FOR SECRETARY OF LABOR APPROVAL—Any application for the making of payroll deductions under Section E. shall comply with the requirements prescribed in Paragraphs 1 through 5:

1. The application shall be in writing and shall be addressed to the Secretary of Labor.

2. The application shall identify the Contract under which the work in question is to be performed. Permission will be given for deductions only on specific, identified contracts, except upon a showing of exceptional circumstances.

3. The application shall state affirmatively that there is compliance with the standards set forth in Section B. The affirmation shall be accompanied by a full statement of the facts indicating such compliance.

4. The application shall include a description of the proposed deduction, the purpose to be served thereby, and the classes of laborers or mechanics front whose wages proposed deduction would be made.

5. The application shall state the name and business of any third person to whom any funds obtained from the proposed deductions are to be transmitted and the affiliation of such person, if any, with the applicant.

G. ACTION BY SECRETARY OF LABOR UPON APPLICATIONS—The Secretary will decide whether or not the requested deduction is permissible under provisions of Section B, and shall notify the applicant in writing of his decision.

H. PROHIBITED PAYROLL DEDUCTIONS—Deductions not elsewhere stipulated and which are not found to be permissible under Section B are prohibited.

I. **METHODS OF PAYMENT OF WAGES—**The payment of wages shall be by cash, negotiable instruments payable on demand, or the additional forms of compensation for which deductions are permissible. No other methods of payment shall be recognized on work subject to the Copeland Act.

ARTICLE 6. RESERVED

ARTICLE 7. NONSEGREGATED FACILITIES—The Contractor certifies that he does not and will not maintain or provide for his employees any segregated facility at any of his establishments; that he does not and will not permit his employees to perform their services at any location under his control where segregated facilities are maintained; and that he will obtain and retain identical certifications from proposed subcontractors prior to award or subcontracts.

"Segregated facilities" shall mean any waiting room, work area, wash and rest rooms, restaurant and other eating area, time clock, locker room and other storage or dressing area, parking lot, drinking fountain, recreation or entertainment area, transportation and housing facility, provided for employees which is segregated by explicit directive or is segregated on the basis of race, color, age, sex, religion or national origin, because of habit, local custom or otherwise. Penalty for violation or making false statements is prescribed in 18 USC 1001.

DISTRICT OF COLUMBIA
WEEKLY STATEMENT OF COMPLIANCE
(Construction)

Project No. Invitation No.	Contract No.	Date

WAGES AND HOURS

	Total This Period	Total To Date
Straight Time Hours Worked		
Overtime Hours Worked		
Overtime and Straight Time Hours Combined		
Wages Earned		

I, _____, _____
(Name of signatory party) (Title)

do hereby state

(1) That I pay or supervise the payment of the persons employed by _____ _____ on the _____;
(Contractor or Subcontractor) (Building or Work)

that during the payroll period commencing on the _____ day of _____, 19____, and ending on the _____ day of _____, 19____, all persons employed on said project have been paid full weekly wages earned, that no rebates have been or will be made either directly or indirectly to or on behalf of said _____ _____
(Contractor or Subcontractor)

from the full weekly wages earned by any person and that no deductions have been made either directly or indirectly from the full wages earned by any person, other than permissible deductions as defined in 29 CFR Part 3 issued by the Secretary of Labor under the Copeland Act as amended (48 Stat. 948; 63 Stat. 108; 72 Stat. 967; 76 Stat. 537; 40 USC 276c), and described below:

(2) That any payroll otherwise under the Contract required to be submitted for the above period are correct and complete; that the wage rates for laborers or mechanics contained therein are not less than the applicable wage rates contained in any wage determination incorporated into the Contract; that the classifications set forth therein for each laborer or mechanic conform with the work he performed.

(3) That any apprentice employed in the above period is duly registered in a bona fide apprenticeship program registered with the Bureau of Apprenticeship Training, U.S. Department of Labor.

NOTE—Fringe Benefits Statement and Signature Block are on reverse.

Form No. DC 2640-11

FRINGE BENEFITS STATEMENT

The Contractor, or subcontractor as appropriate, hereby states that:

(WHERE ALL OR A MAJORITY OF THE FRINGE BENEFITS ARE PAID TO APPROVED PLANS, FUNDS, OR PROGRAMS)

( ) Section 1—In addition to the basic hourly wage rates paid to each employee listed in the above referenced payroll, payments of fringe benefits as listed in the Contract have been or will be made to appropriate programs for the benefit of such employees, except as noted in Section 3 below.

(WHERE ALL OR A MAJORITY OF THE FRINGE BENEFITS ARE PAID IN CASH)

( ) Section 2—Each employee listed in the above referenced payroll has been paid, as indicated on the payroll, the basic hourly wage rate plus an additional payment in the amount of the required fringe benefits as listed in the Contract, except as noted in Section 3 below.

WHERE PART OF THE FRINGE BENEFITS ARE PAID IN CASH AND PART ARE PAID TO PLANS, FUNDS, OR PROGRAMS)

( ) Section 3—All of the fringe benefit payments required by the Contract have been or will be made to appropriate programs, or have been made by cash payments in lieu thereof, or both, to the classifications and in the amounts set forth below:

CLASSIFICATION (Or Classification Code)	HOURLY AMOUNT		IDENTITY AND LOCATION OF PLAN, FUND OR PROGRAM
	Paid To Program	Paid In Cash	

Signature	Title

The willful falsification of either of the statements which appear above may subject the Contractor to civil or criminal prosecution. See 18 USC 1001 and 1020 and 31 USC 231.

Rev. July 1973

Attachment 1
Aerial images of Sites

Aerial Park Map

Ward 7

Benning Stoddert

100 Stoddert Pl., SE

0 50 100 200

1 inch equals 200 feet

- DPR Facility
- Public School
- DC Park boundary
- Ward boundary

Map: ORTHO_Benning Stoddert
Date: Jan 26, 2007
Scale: 1:2,400
Data Source: OCTO GIS, DPR
Photo Imagery: 2005 Earthdata
Coordinate System: NAD 1983 StatePlane MD
Prepared by: DC Dept of Parks and Recreation/fob

Information on this map is for illustration only. The user acknowledges and agrees that the use of this information is at the sole risk of the user. No endorsement, liability, or responsibility for information or opinions expressed is assumed or accepted by any agency of the District of Columbia Government.

Aerial Park Map

Ward 5

Brentwood Park

6th St., between New York and Florida Aves., NE

0 50 100 200

1 inch equals 100 feet

- DPR Facility
- Public School
- DC Park boundary
- Ward boundary

Map: ORTHO_Brentwood Park
Date: Jan 26, 2007
Scale: 1:1,200
Data Source: OCTO GIS, DPR
Photo Imagery: 2005 Earthdata
Coordinate System: NAD 1983 StatePlane MD
Prepared by: DC Dept of Parks and Recreation/fob

Information on this map is for illustration only. The user acknowledges and agrees that the use of this information is at the sole risk of the user. No endorsement, liability, or responsibility for information or opinions expressed is assumed or accepted by any agency of the District of Columbia Government.

Aerial Park Map

Ward 8

Congress Heights

7th St., south of Alabama Ave., SE

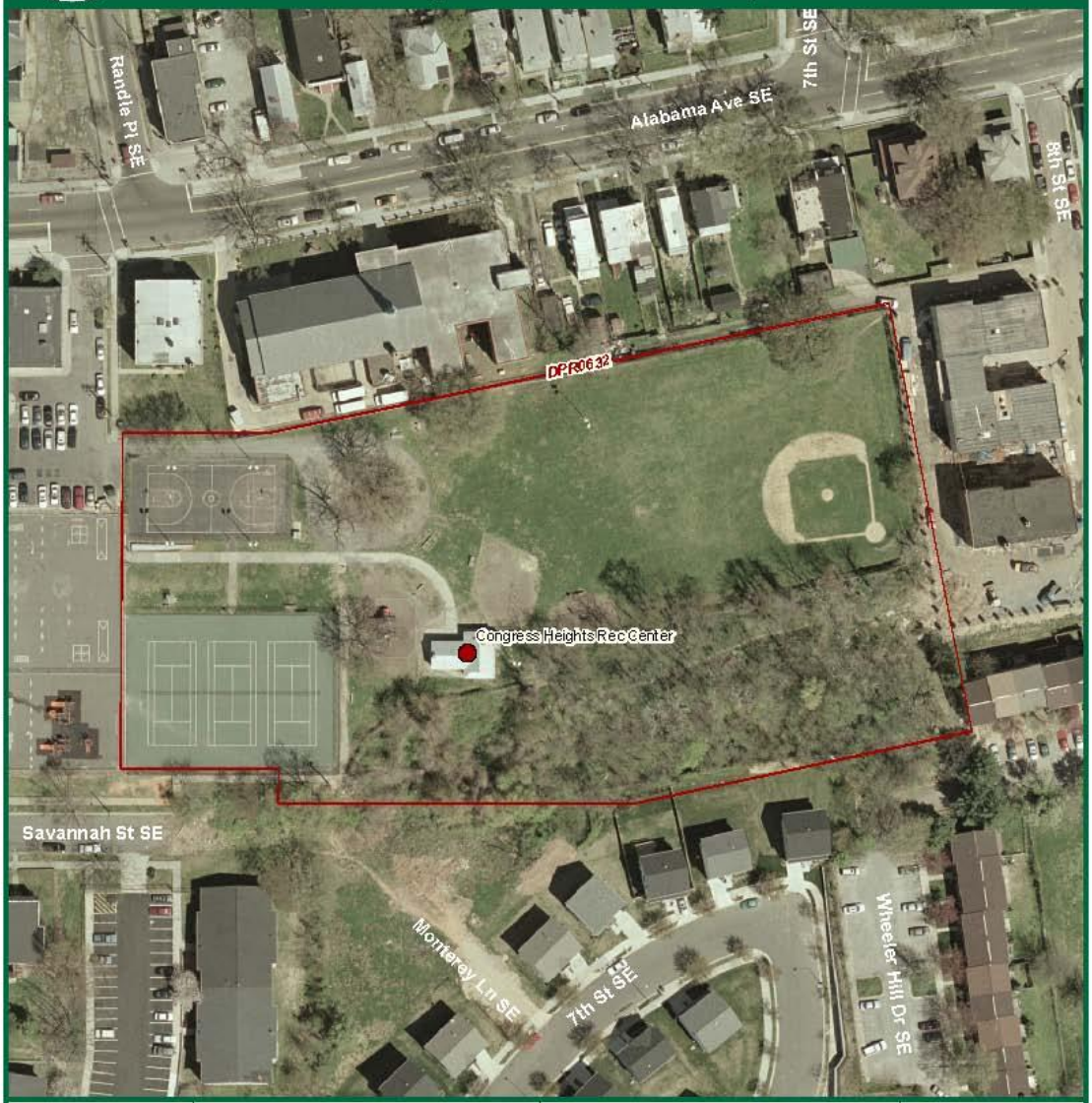

0 50 100 200

1 inch equals 100 feet

- DPR Facility
- Public School
- DC Park boundary
- Ward boundary

Map: ORTHO_Congress Heights
Date: Jan 26, 2007
Scale: 1:1,200
Data Source: OCTO GIS, DPR
Photo Imagery: 2005 Earthdata
Coordinate System: NAD 1983 StatePlane MD
Prepared by: DC Dept of Parks and Recreation/fob

Information on this map is for illustration only. The user acknowledges and agrees that the use of this information is at the sole risk of the user. No endorsement, liability, or responsibility for information or opinions expressed is assumed or accepted by any agency of the District of Columbia Government.

Aerial Park Map

Ward 8

Douglass

Douglass Rec Ctr. (Ft. Stanton Park to St. Elizabeth Hospital)

0 50 100 200

1 inch equals 100 feet

- DPR Facility
- Public School
- DC Park boundary
- Ward boundary

Map: ORTHO_Douglass
Date: Jan 26, 2007
Scale: 1:1,200
Data Source: OCTO GIS, DPR
Photo Imagery: 2005 Earthdata
Coordinate System: NAD 1983 StatePlane MD
Prepared by: DC Dept of Parks and Recreation/fob

Information on this map is for illustration only. The user acknowledges and agrees that the use of this information is at the sole risk of the user. No endorsement, liability, or responsibility for information or opinions expressed is assumed or accepted by any agency of the District of Columbia Government.

Aerial Park Map

Ward 2

Georgetown

Volta Pl. and Q St., to 33rd and 34th Sts., NW

0 50 100 200

1 inch equals 100 feet

- DPR Facility
- Public School
- DC Park boundary
- Ward boundary

Map: ORTHO_Georgetown
Date: Jan 26, 2007
Scale: 1:1,200
Data Source: OCTO GIS, DPR
Photo Imagery: 2005 Earthdata
Coordinate System: NAD 1983 StatePlane MD
Prepared by: DC Dept of Parks and Recreation/fob

Information on this map is for illustration only. The user acknowledges and agrees that the use of this information is at the sole risk of the user. No endorsement, liability, or responsibility for information or opinions expressed is assumed or accepted by any agency of the District of Columbia Government.

Aerial Park Map

Ward 4

Hamilton

13th and 14th Sts., to Hamilton & Gallatin Sts., NW

0 50 100 200

1 inch equals 100 feet

- DPR Facility
- Public School
- DC Park boundary
- Ward boundary

Map: ORTHO_Hamilton
Date: Jan 26, 2007
Scale: 1:1,200
Data Source: OCTO GIS, DPR
Photo Imagery: 2005 Earthdata
Coordinate System: NAD 1983 StatePlane MD
Prepared by: DC Dept of Parks and Recreation/fob

Information on this map is for illustration only. The user acknowledges and agrees that the use of this information is at the sole risk of the user. No endorsement, liability, or responsibility for information or opinions expressed is assumed or accepted by any agency of the District of Columbia Government.

Aerial Park Map

Ward 5

Harry Thomas

Lincoln Rd. and 2nd St., to R and T Sts., NE

0 50 100 200

1 inch equals 100 feet

- DPR Facility
- Public School
- DC Park boundary
- Ward boundary

Map: ORTHO_Harry Thomas
Date: Jan 26, 2007
Scale: 1:1,200
Data Source: OCTO GIS, DPR
Photo Imagery: 2005 Earthdata
Coordinate System: NAD 1983 StatePlane MD
Prepared by: DC Dept of Parks and Recreation/fob

Information on this map is for illustration only. The user acknowledges and agrees that the use of this information is at the sole risk of the user. No endorsement, liability, or responsibility for information or opinions expressed is assumed or accepted by any agency of the District of Columbia Government.

Aerial Park Map

Ward 6

Joy Evans

6th St., between L and M Sts., SE

0 50 100 200

1 inch equals 100 feet

- DPR Facility
- Public School
- DC Park boundary
- Ward boundary

Map: ORTHO_Joy Evans
Date: Jan 26, 2007
Scale: 1:1,200
Data Source: OCTO GIS, DPR
Photo Imagery: 2005 Earthdata
Coordinate System: NAD 1983 StatePlane MD
Prepared by: DC Dept of Parks and Recreation/fob

Information on this map is for illustration only. The user acknowledges and agrees that the use of this information is at the sole risk of the user. No endorsement, liability, or responsibility for information or opinions expressed is assumed or accepted by any agency of the District of Columbia Government.

Aerial Park Map

Ward 1

Kalorama

Kalorama Rd., between Columbia Rd. and 19th St., NW

0 50 100 200

1 inch equals 100 feet

- DPR Facility
- Public School
- DC Park boundary
- Ward boundary

Map: ORTHO_Kalorama
Date: Jan 26, 2007
Scale: 1:1,200
Data Source: OCTO GIS, DPR
Photo Imagery: 2005 Earthdata
Coordinate System: NAD 1983 StatePlane MD
Prepared by: DC Dept of Parks and Recreation/fob

Information on this map is for illustration only. The user acknowledges and agrees that the use of this information is at the sole risk of the user. No endorsement, liability, or responsibility for information or opinions expressed is assumed or accepted by any agency of the District of Columbia Government.

Aerial Park Map

Ward 2

Kennedy

P St., between 6th and 7th Sts., NW

0 50 100 200

1 inch equals 100 feet

- DPR Facility
- Public School
- DC Park boundary
- Ward boundary

Map: ORTHO_Kennedy
Date: Jan 26, 2007
Scale: 1:1,200
Data Source: OCTO GIS, DPR
Photo Imagery: 2005 Earthdata
Coordinate System: NAD 1983 StatePlane MD
Prepared by: DC Dept of Parks and Recreation/fob

Information on this map is for illustration only. The user acknowledges and agrees that the use of this information is at the sole risk of the user. No endorsement, liability, or responsibility for information or opinions expressed is assumed or accepted by any agency of the District of Columbia Government.

Aerial Park Map

Ward 1

Marie Reed

18th St. and Kalorama Rd., NW

0 50 100 200

1 inch equals 100 feet

- DPR Facility
- Public School
- DC Park boundary
- Ward boundary

Map: ORTHO_Marie Reed
Date: Jan 26, 2007
Scale: 1:1,200
Data Source: OCTO GIS, DPR
Photo Imagery: 2005 Earthdata
Coordinate System: NAD 1983 StatePlane MD
Prepared by: DC Dept of Parks and Recreation/fob

Information on this map is for illustration only. The user acknowledges and agrees that the use of this information is at the sole risk of the user. No endorsement, liability, or responsibility for information or opinions expressed is assumed or accepted by any agency of the District of Columbia Government.

Aerial Park Map

Ward 4

Petworth

Taylor St., between 8th and 9th Sts., NW

0 50 100 200

1 inch equals 100 feet

- DPR Facility
- Public School
- DC Park boundary
- Ward boundary

Map: ORTHO_Petworth
Date: Jan 26, 2007
Scale: 1:1,200
Data Source: OCTO GIS, DPR
Photo Imagery: 2005 Earthdata
Coordinate System: NAD 1983 StatePlane MD
Prepared by: DC Dept of Parks and Recreation/fob

Information on this map is for illustration only. The user acknowledges and agrees that the use of this information is at the sole risk of the user. No endorsement, liability, or responsibility for information or opinions expressed is assumed or accepted by any agency of the District of Columbia Government.

Aerial Park Map

Ward 7

Ridge

Ridge Rd. and Burns St., SE

0 50 100 200

1 inch equals 200 feet

- DPR Facility
- Public School
- DC Park boundary
- Ward boundary

Map: ORTHO_Ridge
Date: Jan 26, 2007
Scale: 1:2,400
Data Source: OCTO GIS, DPR
Photo Imagery: 2005 Earthdata
Coordinate System: NAD 1983 StatePlane MD
Prepared by: DC Dept of Parks and Recreation/fob

Information on this map is for illustration only. The user acknowledges and agrees that the use of this information is at the sole risk of the user. No endorsement, liability, or responsibility for information or opinions expressed is assumed or accepted by any agency of the District of Columbia Government.

Aerial Park Map

Ward 6

Sherwood

9th and 10th Sts., to F and G Sts., NE

0 50 100 200

1 inch equals 100 feet

- DPR Facility
- Public School
- DC Park boundary
- Ward boundary

Map: ORTHO_Sherwood
Date: Jan 26, 2007
Scale: 1:1,200
Data Source: OCTO GIS, DPR
Photo Imagery: 2005 Earthdata
Coordinate System: NAD 1983 StatePlane MD
Prepared by: DC Dept of Parks and Recreation/fob

Information on this map is for illustration only. The user acknowledges and agrees that the use of this information is at the sole risk of the user. No endorsement, liability, or responsibility for information or opinions expressed is assumed or accepted by any agency of the District of Columbia Government.

Aerial Park Map

Ward 1

Walter Pierce Park

Adams Mill and Ontario Rds., NW

0 50 100 200

1 inch equals 100 feet

- DPR Facility
- Public School
- DC Park boundary
- Ward boundary

Map: ORTHO_Walter Pierce Park
Date: Jan 26, 2007
Scale: 1:1,200
Data Source: OCTO GIS, DPR
Photo Imagery: 2005 Earthdata
Coordinate System: NAD 1983 StatePlane MD
Prepared by: DC Dept of Parks and Recreation/fob

Information on this map is for illustration only. The user acknowledges and agrees that the use of this information is at the sole risk of the user. No endorsement, liability, or responsibility for information or opinions expressed is assumed or accepted by any agency of the District of Columbia Government.

Triangle Park-18th and Argyle Terr.

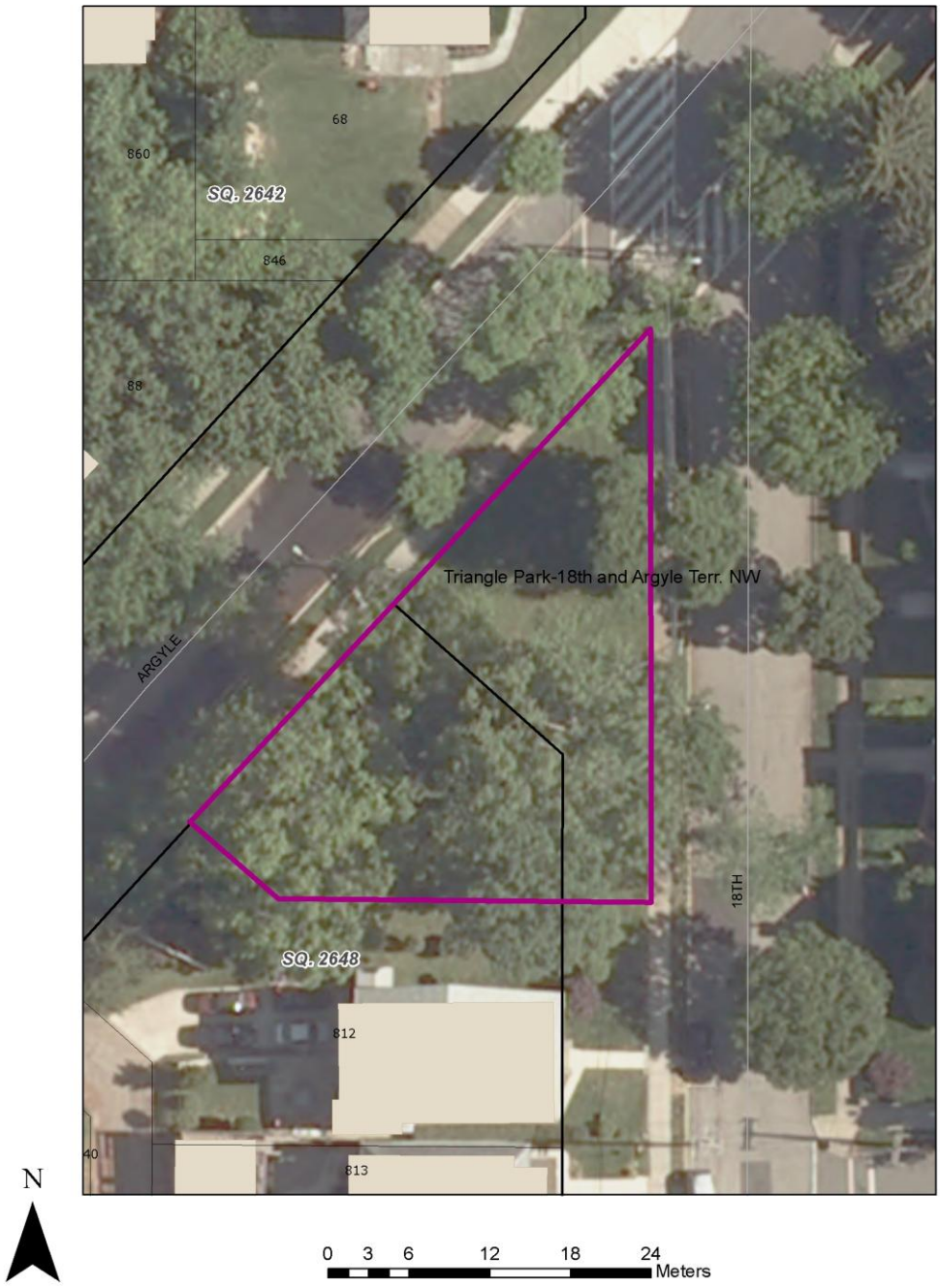

Benning Park: Benches- 2 benches near playground

Congress heights: 1 picnic table and I bench near playground

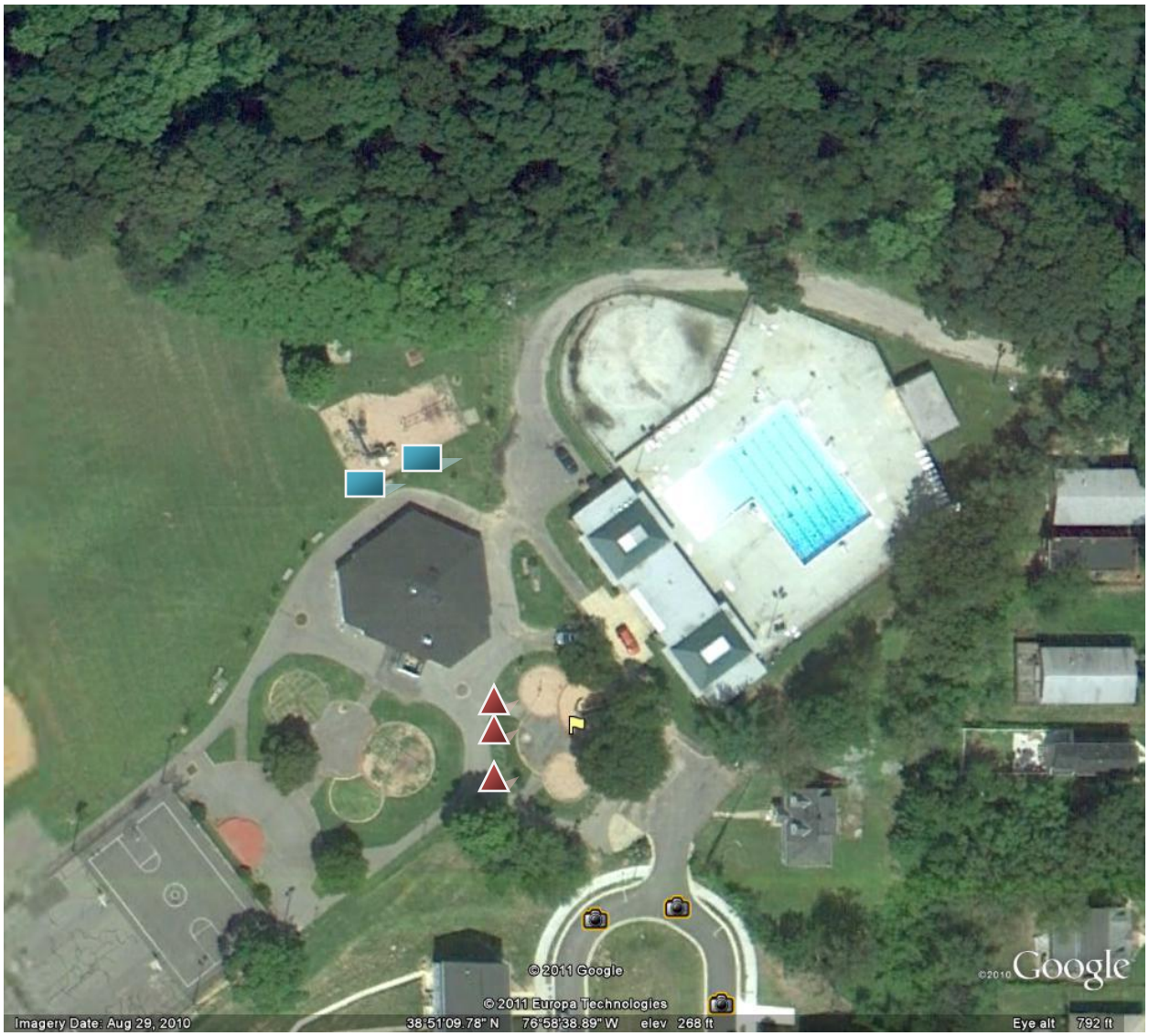

Douglass Community Center: 2 picnic tables near playground and 3 backless benches in circle

Ridge Playground: 2 benches near playground

Benning Stoddert: 2 benches on hill

Sherwood Recreation: 1 bench and 1 picnic table

Joy Evans: 1 bench near playground

Brentwood Village Playground

Harry Thomas Recreation center- 1 bench near play area

Triangle Park- 18th and Argyle

Petworth- 1 bench

Hamilton Park- 1 picnic table

Georgetown Recreation- 1 picnic table

Kennedy Recreation- 1 bench near BBall court and 1 picnic table near play area

Walter Pierce- 2 picnic tables and 1 bench in dog park area

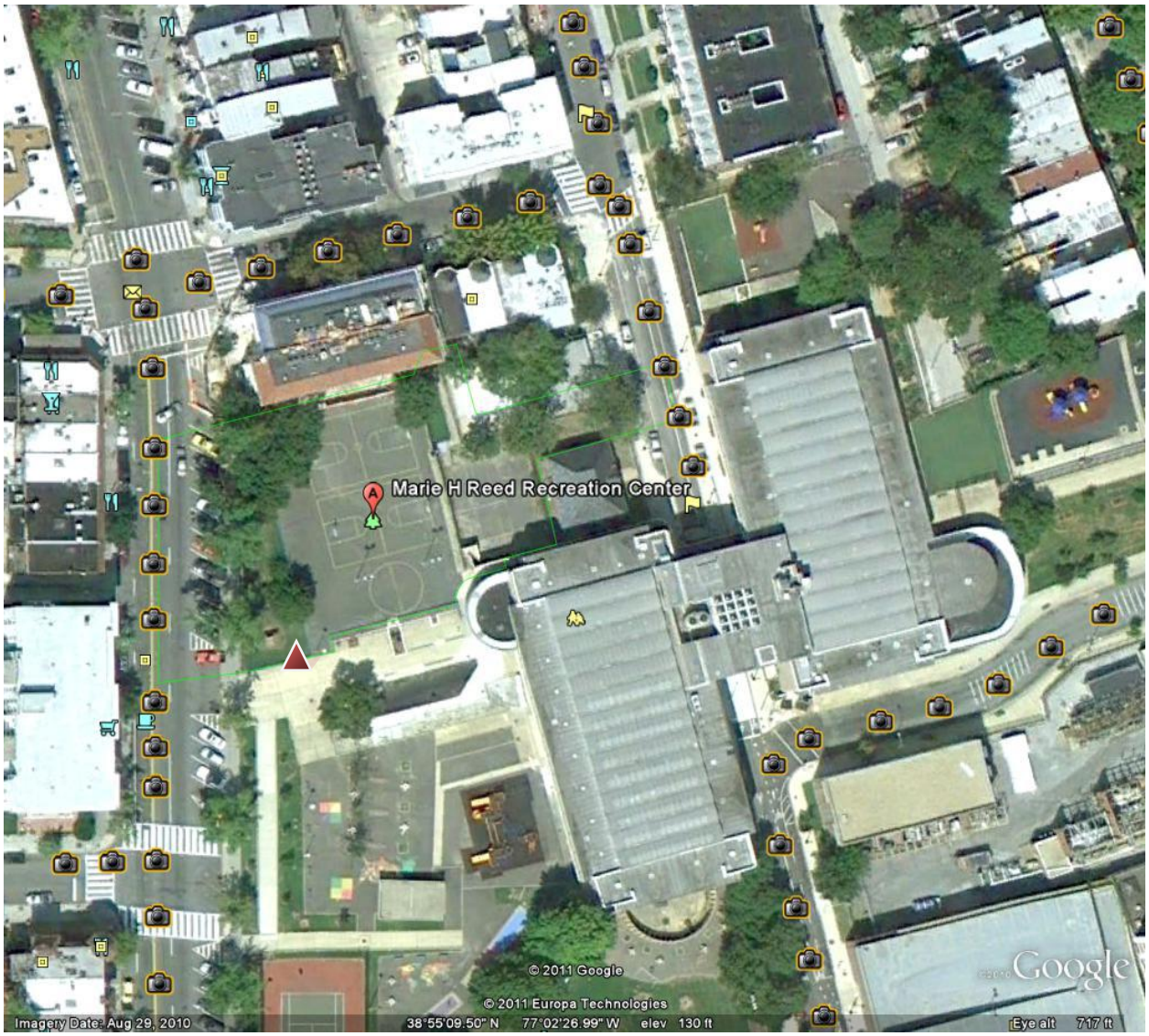

Marie Reed-1 bench near entrance

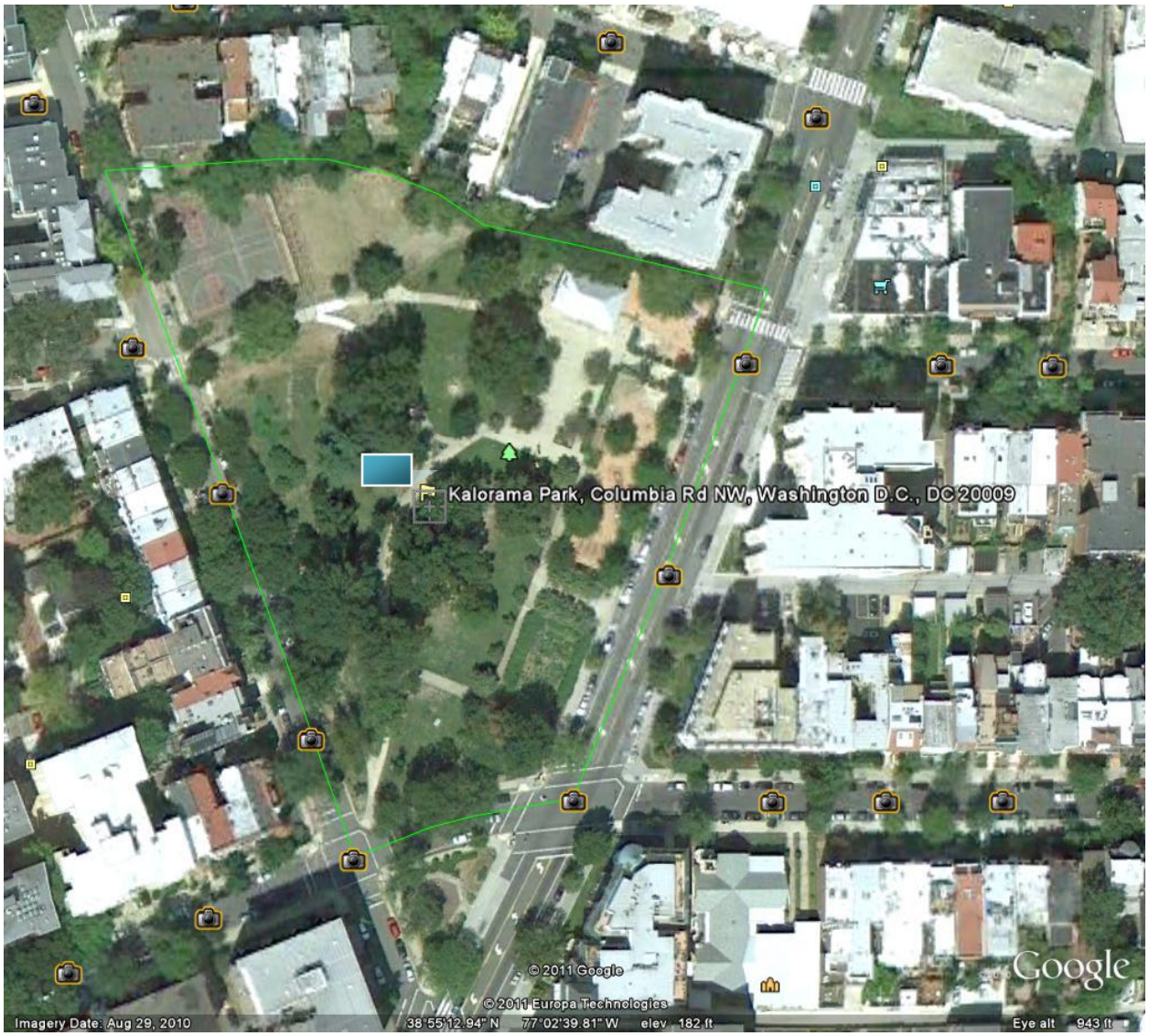

Kalorama Park- 1 picnic table in the park

Attachment 3 Concrete pad detail

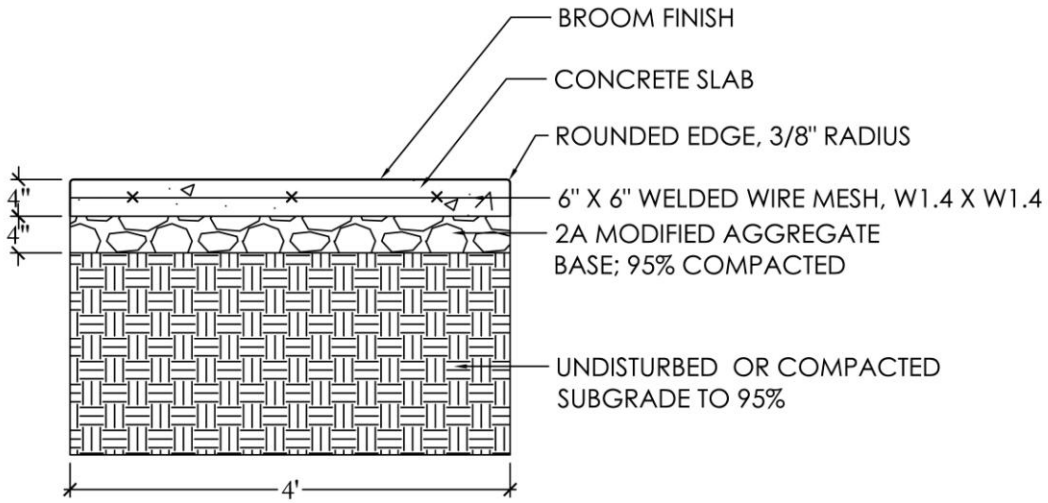

GENERAL INFORMATION

1) Verfiy the exact location and elevation of all underground utilities and other structures before starting work. Call Miss Utility: 1-800-257-7777

2) Use extreme care to protect roots of existing trees. Do not stockpile rubble or other debris at the base of trees. Tree protection is to be used to prevent damage during site work.

3) Use extreme care to protect all existing elements to remain from damage or displacement. Remove any debris or trash unearthed during excavation and dispose of legally.

4) Layout and staking of bench slab is to be done in the field by contractor and approved by the COTR prior to the start of construction.

5) Consult drawing for location(s) of bench slab. Bench slab is 4 (four) feet wide X 6 (six) feet long unless specified otherwise on drawing.

6) Provide four (4) inches of compacted aggregate base (95% compaction) to reduce the possible heaving (expansion/contaction) from frost.

7) Tamp aggregate on two (2) inch lifts to provide a compact, firm surface, allowing for good drainage. Aggregate shall be compacted to 95%.

8) Use 6" x 6" welded wire mesh to enhance the strength and bearing potential of the concrete.

9) Pour concrete for bench slab to a depth of four (4) inches. Round all exposed edges to a 3/8" radius edge.

10) Apply a broom finish surface. Contractor is responsible for concrete until it sets. If graffiti or unwanted marks are visible, contractor must correct.

DATE: 12/04	NORTH: NA	CONCRETE BENCH SLAB	DISTRICT OF COLUMBIA DEPARTMENT OF PARKS AND RECREATION 3149 16th Street, N.W. Washington, D.C. 20010 202-673-7687 www.dpr.dc.gov
SCALE: 3/4" = 1' - 0"			
SHEET TITLE: DETAIL			

Attachment 4 Recommended furnishing

For the following sites:

Model RB-28

1. Congress Heights
2. Benning Park
3. Ridge
4. Benning Stoddert
5. Sherwood Rec. Center
6. Joy Evans
7. Brentwood Park
8. Harry Thomas
9. 18th and Argyle
10. Georgetown
11. Kennedy

VICTOR STANLEY, INC.®
-Manufacturers of Quality Site Furnishings since 1962-

P.O. DRAWER 330 - DUNKIRK, MD 20754 USA
TOLL FREE: (800) 368-2573 (USA & CANADA)
TEL (301) 855-8300 - FAX (410) 257-7579
WEB SITE: HTTP://WWW.VICTORSTANLEY.COM

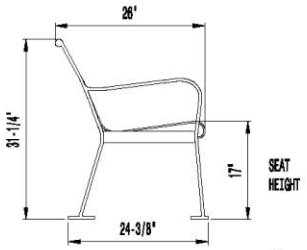

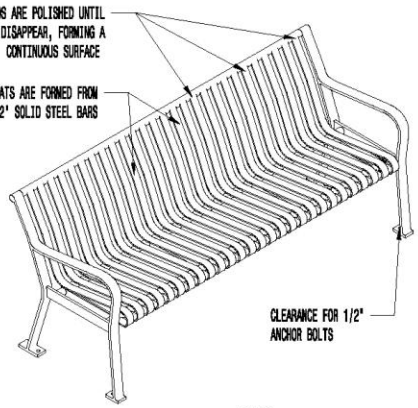

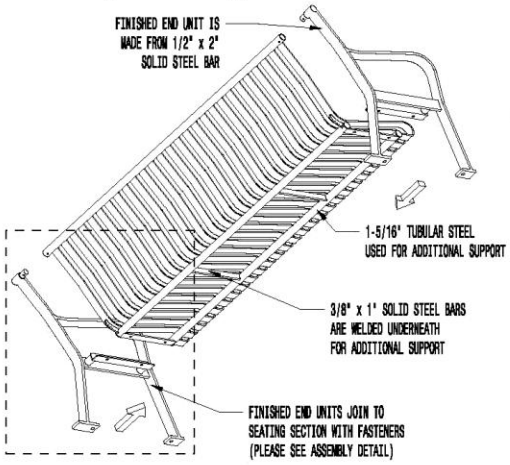

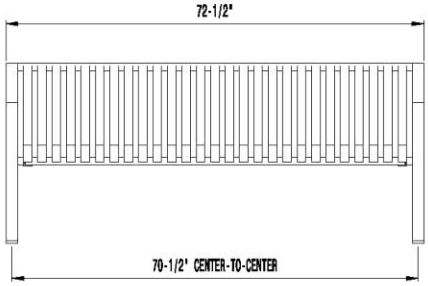

AVAILABLE OPTIONS
- POWDER COATING
  - 11 STANDARD COLORS, CUSTOM COLORS (INCLUDING THE RAL RANGE)
  - OPTIONAL FAUX WOOD FINISH
- INTERMEDIATE & CENTER ARMRESTS
  - 4', 6', & 8', AVAILABLE WITH OPTIONAL SOLID STEEL ARMRESTS

LENGTHS
- STANDARD 4'
- STANDARD 6' LENGTH SHOWN
- STANDARD 8'

ASSEMBLY DETAIL

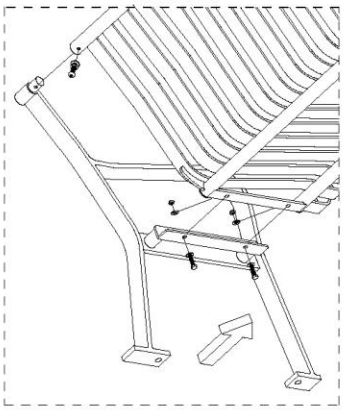

NOTES:
1. DRAWINGS NOT TO SCALE. DO NOT SCALE DRAWINGS.
2. ALL FABRICATED METAL COMPONENTS ARE STEEL SHOTBLASTED, ETCHED, PHOSPHATIZED, PREHEATED, AND ELECTROSTATICALLY POWDER-COATED WITH T.G.I.C. POLYESTER POWDER COATINGS. PRODUCTS ARE FULLY CLEANED AND PRETREATED, PREHEATED AND COATED WHILE HOT TO FILL CREVICES AND BUILD COATING FILM. COATED PARTS ARE THEN FULLY CURED TO COATING MANUFACTURER'S SPECIFICATIONS. THE THICKNESS OF THE RESULTING FINISH AVERAGES 8-10 MILS (200-250 MICRONS).
3. IT IS NOT RECOMMENDED TO LOCATE ANCHOR BOLTS UNTIL BENCH IS IN PLACE. THIS VICTOR STANLEY, INC. PRODUCT MUST BE PERMANENTLY AFFIXED TO THE GROUND. CONSULT YOUR LOCAL CODES FOR REGULATIONS.
4. ANCHOR BOLTS NOT PROVIDED BY VICTOR STANLEY, INC.
5. FOR HIGH SALT ABUSIVE CLIMATES, HOT DIP GALVANIZING BEFORE POWDER COATING IS AVAILABLE. SEE WRITTEN SPECIFICATIONS FOR DETAILS.
6. ALL SPECIFICATIONS ARE SUBJECT TO CHANGE. CONTACT MANUFACTURER FOR DETAILS.
7. THIS PRODUCT IS SHIPPED PARTIALLY UNASSEMBLED.

RB-28

STEELSITES™ RB SERIES

ALL STEEL CONTOURED BENCH
SHOWN: STANDARD 6-FOOT LENGTH

COPYRIGHT 2009 VICTOR STANLEY, INC. ALL RIGHTS RESERVED
REV. 7/29/09 DRAWN L.D.L. 2009-270

VICTOR STANLEY, INC.®
-Manufacturers of Quality Site Furnishings since 1962-

CR-138 Classic Series bench.
Visit **www.victorstanley.com** for details.

Sites:

1. Petworth – to match existing benches on site.

VICTOR STANLEY, INC.
-Manufacturers of Quality Site Furnishings since 1962-

P.O. DRAWER 330 - DUNKIRK, MD 20754 USA
TOLL FREE: (800) 368-2573 (USA & CANADA)
TEL (301) 855-8300 - FAX (410) 257-7579
WEB SITE: HTTP://WWW.VICTORSTANLEY.COM

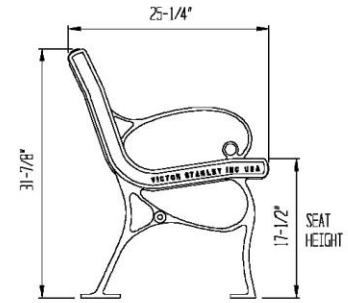

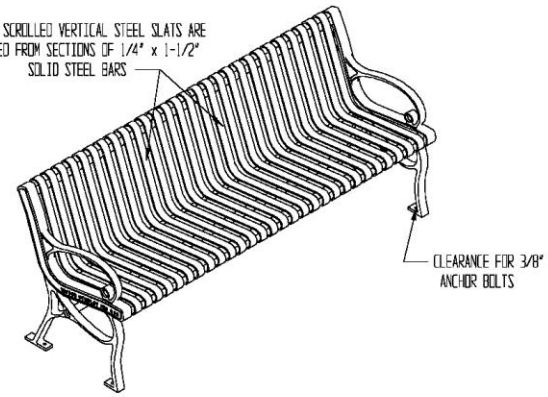

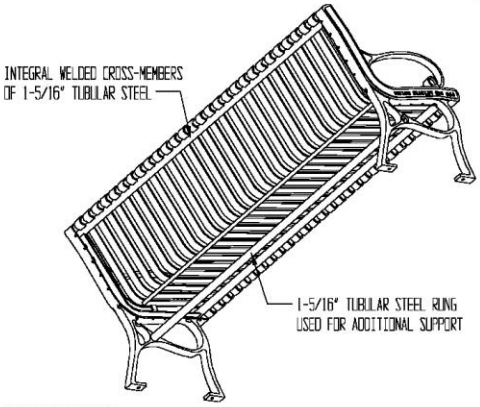

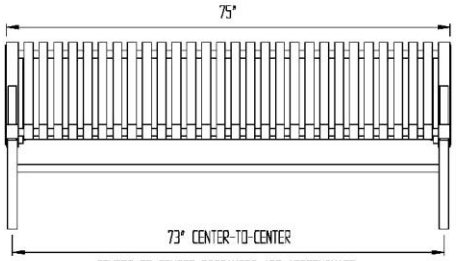

CENTER-TO-CENTER DISTANCES ARE APPROXIMATE
(VARIATIONS IN CASTINGS ARISE FROM DIFFERENT RATES OF COOLING)

AVAILABLE OPTIONS:
- POWDER COATING
  - 10 STANDARD COLORS, CUSTOM COLORS (INCLUDING THE RAL RANGE)
- CUSTOM PLAQUES
  - ENGRAVED CAST BRONZE PLAQUES

INTERMEDIATE & CENTER ARMRESTS
- 4' & 6' AVAILABLE WITH OPTIONAL ARMRESTS
- AVAILABLE WITH FULL CENTER CASTING

LENGTHS
- STANDARD 4'
- STANDARD 6' LENGTH SHOWN

NOTES:
1. DUCTILE IRON CASTINGS COME WITH A TEN YEAR WARRANTY AGAINST BREAKAGE.
2. DRAWING NOT TO SCALE. DO NOT SCALE DRAWINGS.
3. ALL FABRICATED METAL COMPONENTS ARE STEEL SHOTBLASTED, ETCHED, PHOSPHATIZED, PREHEATED, AND ELECTROSTATICALLY POWDER-COATED WITH T.G.I.C. POLYESTER POWDER COATINGS. PRODUCTS ARE FULLY CLEANED AND PRETREATED, PREHEATED AND COATED WHILE HOT TO FILL CREVICES AND BUILD COATING FILM. COATED PARTS ARE THEN FULLY CURED TO COATING MANUFACTURER'S SPECIFICATIONS. THE THICKNESS OF THE RESULTING FINISH COAT AVERAGES 8-10 MILS (200-250 MICRONS).
4. IT IS NOT RECOMMENDED TO LOCATE ANCHOR BOLTS UNTIL BENCH IS IN PLACE. THIS VICTOR STANLEY INC. PRODUCT MUST BE PERMANENTLY AFFIXED TO THE GROUND. CONSULT YOUR LOCAL CODES FOR REGULATIONS.
5. ANCHOR BOLTS NOT PROVIDED BY VICTOR STANLEY, INC.
6. FOR HIGH SALT ABUSIVE CLIMATES, HOT DIP GALVANIZING BEFORE POWDER COATING IS AVAILABLE. SEE WRITTEN SPECIFICATIONS FOR DETAILS.
7. ALL SPECIFICATIONS ARE SUBJECT TO CHANGE. CONTACT MANUFACTURER FOR DETAILS.
8. THIS PRODUCT IS SHIPPED PARTIALLY UNASSEMBLED.

CR-138

CLASSIC SERIES STANDARD BENCH WITH DUCTILE IRON END FRAMES
SHOWN: STANDARD 6-FOOT LENGTH

COPYRIGHT 2004 VICTOR STANLEY, INC. ALL RIGHTS RESERVED

REV. 9/1/04 DRAWN C.D.B. 2004-319

Model FS-53-
Recycled wood
slats

The following sites:

1. Marie Reed
2. Walter Pierce
3. Douglass

Recommended furnishing for all sites that need picnic tables

Model FRST-6

VICTOR STANLEY, INC.®
-Manufacturers of Quality Site Furnishings since 1962-

P.O. DRAWER 330 - DUNKIRK, MD 20754 USA
TOLL FREE: (800) 368-2573 (USA & CANADA)
TEL (301) 855-8300 - FAX (410) 257-7579
WEB SITE: HTTP://WWW.VICTORSTANLEY.COM

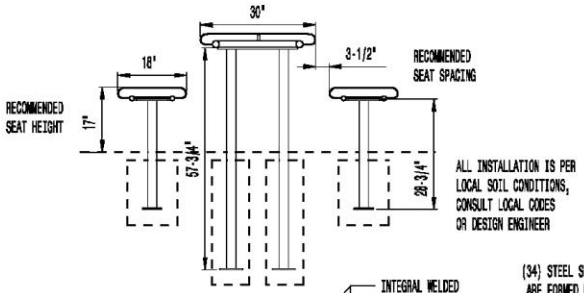

ALL INSTALLATION IS PER LOCAL SOIL CONDITIONS, CONSULT LOCAL CODES OR DESIGN ENGINEER

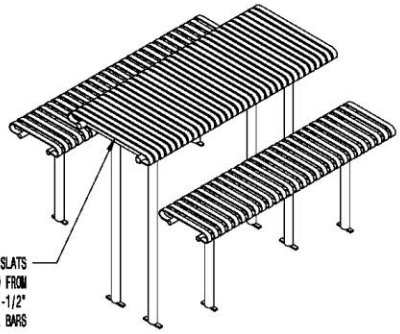

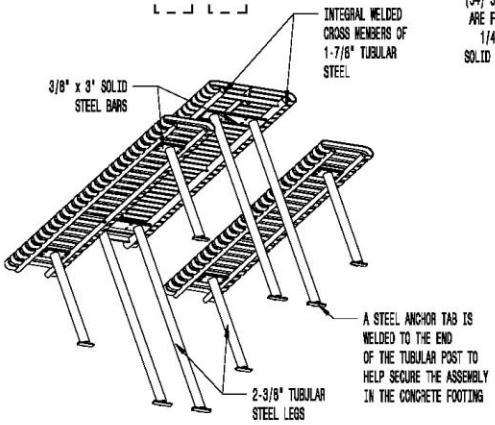

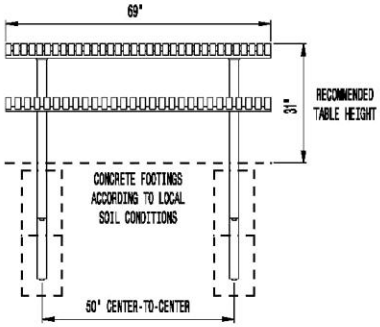

AVAILABLE OPTIONS:
- POWDER COATING
  - 12 STANDARD COLORS, CUSTOM COLORS (INCLUDING THE RAL RANGE)
- MOUNTING
  - STANDARD IN-GROUND AND SURFACE
  - AVAILABLE WITH ADA COMPLIANT LEG POSITIONING
  - (ADA COMPLIANT TABLE/LEG COMBINATIONS 8' FRST-6 WITH (2) 6' FRB-6 BENCHES AND 6' FRST-6 WITH (2) 4' FRB-6 BENCHES)

LENGTHS
- STANDARD 6' LENGTH SHOWN
- STANDARD 8'

MOUNTING
- STANDARD IN-GROUND AND SURFACE

NOTES:
1. DRAWINGS NOT TO SCALE. DO NOT SCALE DRAWINGS.
2. ALL FABRICATED METAL COMPONENTS ARE STEEL SHOTBLASTED, ETCHED, PHOSPHATIZED, PREHEATED, AND ELECTROSTATICALLY POWDER-COATED WITH T.G.I.C. POLYESTER POWDER COATINGS. PRODUCTS ARE FULLY CLEANED AND PRETREATED, PREHEATED AND COATED WHILE HOT TO FILL CREVICES AND BUILD COATING FILM. COATED PARTS ARE THEN FULLY CURED TO COATING MANUFACTURER'S SPECIFICATIONS. THE THICKNESS OF THE RESULTING FINISH AVERAGES 8-10 MILS (200-250 MICRONS).
3. THIS VICTOR STANLEY, INC. PRODUCT MUST BE PERMANENTLY AFFIXED IN THE GROUND. CONSULT YOUR LOCAL CODES FOR REGULATIONS.
4. FOR HIGH SALT ABUSIVE CLIMATES, HOT DIP GALVANIZING BEFORE POWDER COATING IS AVAILABLE. SEE WRITTEN SPECIFICATIONS FOR DETAILS.
5. ALL SPECIFICATIONS ARE SUBJECT TO CHANGE. CONTACT MANUFACTURER FOR DETAILS.
6. THIS PRODUCT IS SHIPPED PARTIALLY UNASSEMBLED.

FRST-6 SPECIAL

AS SPECIFIED BY GARDEN VALLEY CLEVELAND PROJECT

STEELSITES™ SERIES

STANDARD ALL STEEL TABLE
SHOWN: STANDARD 6-FOOT LENGTH WITH IN-GROUND MOUNT
STANDARD (2) FRB-6 6-FOOT LENGTH BENCHES WITH STANDARD IN-GROUND MOUNT

COPYRIGHT 2010 VICTOR STANLEY, INC. ALL RIGHTS RESERVED
REV. 4/9/10 DRAWN L.D.L. 2010-115