AMENDMENT OF SOLICITATION / MODIFICATION OF CONTRACT

1. Contract Number	Page of Pages
	1 | 2

2. Amendment/Modification Number	3. Effective Date	4. Requisition/Purchase Request No.	5. Solicitation Caption
DCKT-2011-B-0016-0006	See 16C Below		Build-Out of Tire Shop

6. Issued by: Code

Office of Contracting and Procurement
Transportation and Specialty Equipment Commodity Group
2000 14th Street NW, 6th Floor
Washington, DC 20009

7. Administered by (If other than line 6)

8. Name and Address of Contractor (No. street, city, county, state and zip code)

Code Facility

X	9A. Amendment of Solicitation DCKT-2011-B-0016
	9B. Dated (See Item 11) 10/29/10
	10A. Modification of Contract Order No.
	10B. Dated (See Item 13)

11. THIS ITEM ONLY APPLIES TO AMENDMENTS OF SOLICITATIONS

☐ The above numbered solicitation is amended as set forth in item 14. The hour and date specified for receipt of Offers ☒ is extended. ☐ is not extended. Offers must acknowledge receipt of this amendment prior to the hour and date specified in the solicitation or as amended, by one of the following methods: (a) By completing Items 8 and 15, and returning 1 copies of the amendment: (b) By acknowledging receipt of this amendment on each copy of the offer submitted; or (c) BY separate letter or fax which includes a reference to the solicitation and amendment number. FAILURE OF YOUR ACKNOWLEDGMENT TO BE RECEIVED AT THE PLACE DESIGNATED FOR THE RECEIPT OF OFFERS PRIOR TO THE HOUR AND DATE SPECIFIED MAY RESULT IN REJECTION OF YOUR OFFER. If by virtue of this amendment you desire to change an offer already submitted, such may be made by letter or fax, provided each letter or telegram makes reference to the solicitation and this amendment, and is received prior to the opening hour and date specified.

12. Accounting and Appropriation Data (If Required)

13. THIS ITEM APPLIES ONLY TO MODIFICATIONS OF CONTRACTORS/ORDERS, IT MODIFIES THE CONTRACT/ORDER NO. AS DESCRIBED IN ITEM 14

	A. This change order is issued pursuant to (Specify Authority): The changes set forth in Item 14 are made in the contract/order no. in item 10A.
	B. The above numbered contract/order is modified to reflect the administrative changes (such as changes in paying office, appropriation data etc.) set forth in item 14, pursuant to the authority of 27 DCMR, Chapter 36, Section 3601.2.
	C. This supplemental agreement is entered into pursuant to authority of:
	D. Other (Specify type of modification and authority)

E. IMPORTANT: Contractor ☐ is not ☒ is required to sign this document and return 1 copies to the issuing office.

14. Description of Amendment/Modification (Organized by UCF Section headings, including solicitation/contract subject matter where feasible.)

Solicitation DCKT-2011-B-0016 is amended to provide formal answers to questions posed by potential bidders and to include revised drawings, specifications and details as outlined on Page 2 of this amendment.

The bid submission date is extended to December 21, 2010 at 2:00 PM

Except as provided herein, all terms and conditions of the document referenced in item (9A or 10A) remain unchanged and in full force and effect.

15A. Name and Title of Signer (Type or print)		16A. Name of Contracting Officer James Roberts	
15B. Name of Contractor (Signature)	15C. Date Signed	16B. District of Columbia (Signature of Contracting Officer)	16C. Date Signed 12/13/10

A. One Hundred Thirty Six (136) formal responses to questions posed by perspective bidders are provided in Attachment A22 to this amendment. These responses represent the final answers to questions asked. If the same question had been responded to in a previous amendment, the response in this amendment replaces those answers.

B. Attachment No.1 Revised Specification Section 07100: Caulking and Sealants.

C. Attachment No.2 Revised Specification Section 09301: Ceramic Tiles.

D. Attachment No.3 Revised Specification Section 07400: Quarry Tile.

E. Attachment No.4 Lighting Fixtures Schedule.

F. Attachment No.5 Security Camera Specification.

G. Attachment No.6 Metal Gate Plans.

H. Attachment No.7 Elevator Interior Specifications.

I. Attachment No.8 Plumbing Fixtures Schedule.

J. Attachment No.9 Revised Door/ Frame Schedule.

K. Attachment No.10 Control Sequences for Heating & Cooling.

L. Attachment No.11 Water & Drainage Sketches.

M. Attachment No.12 Revised Drawing for Section C-2A; Utility Plan.

N. Attachment No.13 Revised Specification Section 02150: Wheel Stops.

O. Attachment No.14 Revised Specification Section 07510: Insulation.

P. Attachment No.15 Revised Specification Section 11011: Casework, Cabinets & Equipment.

Q. Attachment No.16 Revised Specification Section 07200: Roof Walkway Pavers.

R. Attachment No.17 ADA Compliance & Diagrams for Bathrooms.

S. Attachment No.18 Revised Bathroom Plans.

T. Attachment No.19 Bathroom Signage and Diagram.

U. Attachment No.20 Staircase & Landing Guard Rail Diagram

V. Attachment No.21 Additional Revisions to Specification Document.

BUILD OUT OF TIRE SHOP AND ADMINISTRATIVE OFFICES

SECTION 07100 – CAULKING AND SEALANTS

PART 1 - GENERAL

1.1 RELATED DOCUMENTS

A. Drawings and general provisions of the Contract, including General and Supplementary Conditions and other Division 1 Specification Sections, apply to this Section.

1.2 DESCRIPTION OF WORK:

A. Under this section furnish and install everything usually considered necessary for a complete caulking job and ordinarily provided, whether or not actually mentioned, including:

1. Caulking of all door and window frames, louvers, vents, etc., in exterior walls.

2. Caulking of all door, window frames, louvers, grilles, vents, etc., in interior walls.

3. Work under this section shall be coordinated with work in other sections so that joints will be watertight.

Indicated Seal drawings for exterior opening other than specified above and other locations where caulking is

1.3 RELATED WORK SPECIFIED ELSEWHERE:

Caulking is indicated Seal drawings for exterior opening other than specified above and other locations where

A. Concrete Work: Section 03301

B. Masonry Work: Section 04010

C. Glazing: Section 08200

D. Hollow Metal Frames: Section 08111

E. Ceramic Tile: Section 09310

F. Acoustic Tile: Section 09510

1.4 SUBMITTALS:

A. Refer to Section 1.3, Special Stipulations, for submittal requirements, Paragraph 3, Samples, Catalogue Cuts, etc., and Paragraph 4, Certified Statement by Contractor.

B. Prior to making deliveries submit samples on:

1. Each type of compound (including primers): 2 pint samples or 2 cartridges.

2. Duplicate samples of oakum and/or foam fillers.

1.5 PRODUCT DELIVERY, STORAGE, AND HANDLING:

A. Deliver materials to project site in manufacturer's unopened original packaging.

B. Store materials off ground in a dry place at temperatures between 46°F and 80°F.

1.6 QUALITY CONTROL AND GUARANTEE:

A. Work shall be performed by a specialty subcontractor with a minimum experience of two years.

B. Furnish written guarantee that joints sealed will remain watertight and bonded to material surfaces for a period of two years from date of final acceptance of work. Contractor and specialty subcontractor are required to counter-sign guarantee.

PART 2 - PRODUCTS

2.1 CAULKING AND SEALING COMPOUNDS:

A. Caulking compound, oil and resin base type, (for building construction) Federal Specification TT-C-00598 C (I)

B. Sealer Compound, rubber base, two component (for caulking, sealing and glazing in building construction): Federal Specification TT-S-227 B (I).

1. Polysulfide type.

2. Urethane type.

C. Sealing compound, synthetic rubber base, single component, chemically curing for caulking, sealing and glazing in building construction, Federal Speciflcation TT-S-230 A (I).

1. Acrylic Terpolymer type.

2. Acrylic Polymeric Type

D. Sealing Compound: Silicone rubber base (for caulking, sealing, and glazing in buildings and other structures): Federal Specification TT-S-001543 A.

2.2 PRIMERS AND FILLERS:

A. Primers shall be of type recommended by manufacturer of caulking or sealing compound.

B. Joint Fillers:

1. For oil and resin base type compounds: picked oakum or as approved.

2. For sealing compounds: Fillers, expansion joints, bituminous and nonbituminous (preformed, for concrete), Federal Specification HH-F-341, type II, nonbituminous, class A, sponge rubber or foam dam of urethane, polyethylene, neoprene, or polyvinyl-chloride as recommended by the manufacturer of the caulking compound used.

PART 3 - EXECUTION

3.1 GENERAL:

A. All exterior joints shall be caulked with either a polysulfide, acrylic polymeric type compound unless noted otherwise. Polysulfide base compound shall not be used where contact with bituminous products will occur.

B. All interior joints shall be caulked with an oil and resin type compound unless noted otherwise.

C. All horizontal surfaces subject to traffic shall be caulked with a urethane type compound unless noted otherwise.

D. All ceramic tile and glass like surfaces shall be caulked with a silicone type compound unless noted otherwise.

3.2 JOINT PREPARATION AND CAULKING:

A. Prior to commencing work all openings or joints shall be examined and prepared for caulking.

1. Cleaned out to minimum depth of 3/4 inch.

2. Primed as recommended by manufacturer of caulking compound.

B. Prior To Caulkinq With Compound:

1 First caulked with non-staining picked oakum to within 3/4 in. of outer edge of joint where oil and resin type compound is required.

2. Caulked with a compressible foam tube or gasket so that depth of compound is 1/2 the joint width where any type of sealing compound is required.

C. Application:

1. Where application by gun is impracticable compound may be applied with knife.
2. Caulking shall be used in strict accordance with the manufacturer's recommendations.
3. Caulking shall completely seal entire joint.
4. Finished joint shall be smooth, even and of same thickness for the entire length of the caulked joint except for tube gasket forming a thinner center section where required.

END OF SECTION

BUILD OUT OF TIRE SHOP AND ADMINISTRATIVE OFFICES

SECTION 09310 – CERAMIC TILE

PART 1 - GENERAL

1.1 RELATED DOCUMENTS

A. Drawings and general provisions of the Contract, including General and Supplementary Conditions and other Division 1 Specification Sections, apply to this Section.

1.2 SUMMARY

A. **Description of Work**: Work of this Section includes, but is not limited to, the following:
1. Floor Finishes as shown drawings.
2. Access panels for items of mechanical, plumbing and electrical Work located behind or above finished walls or ceilings which require access, whether or not such panels are indicated on Drawings.

1.3 RELATED WORK SPECIFIED ELSEWHERE

A. Concrete Work: Section 03012
B. Masonry Work: Section 04200
E. Quarry Tile: Section 09910
F. Stone and Marble (Interior): Section 09110
H. Toilet Partitions: Section 10200
I. Miscellaneous Building Accessories: Section 10300
J. Plumbing: Section 15
K. Electrical: Section 16

1.4 SUBMITTALS

A. See Special Stipulations for submittal requirements.
B. Submit the following samples:

1. Glazed Wall Tile:
   a. Panel for each color and type.
   b. Minimum of four tiles per panel.
2. Ceramic Mosaic Tile:
   a. Panel for each color, pattern, and type.
   b. Minimum panel size: 8 x 8 inches.
3. Trim Shapes: Each color, type and shape.
4. Accessories: Each color, type and style.
5. Thresholds or Edging Strips:
   a. Each type: 12 inch minimum length.

b. Show color, shape, material and finish.

6. Control Joint Material:

a. Filler Strip: 12 inch length.
b. Sealer: One tube or 1/2 pint if in liquid form.

7. Grout: 1/2 pint sample.

C. Certificates:

1. Tile: Furnish Master Grade Certificate for all tile in accordance with ANSI A-137.1-1967.

2. Mortars, Adhesive and Grouts: Certificate showing compliance with applicable standards for products used.

D. Manufacturer's instructions shall be furnished for commercial Portland Cement Mortar, dry-set materials and mastic grout.

PART 2 - PRODUCTS

2.1 PRODUCT LABELING. DELIVERY AND HANDLING:

A. Deliver materials in manufacturers' original sealed containers.

1. Labels legible and intact identifying brand name and contents.
2. Tile cartons grade-sealed by manufacturer in accordance with ANSI A137.l-1067.
3. Grade-seals unbroken.
4. Manufactured mortars and grouts in containers labeled with hallmarks certifying compliance with reference standards.
5. Organic adhesive containers to bear hallmark of either Adhesive and Sealant Council or Tile Contractors Association of America certifying compliance with ANSI A136.1.
3. Deliver mastic grout ready for use.

B. Deliver dry set mortar in sealed, moistureproof Store materials under cover in manner to prevent damage or contamination.

2.1.1 JOB CONDITIONS:

A. Environmental:

1. Set and grout tile in Portland Cement Mortar when ambient temperature is at least 50°F. and rising.

2. Comply with minimum temperature recommendations of manufacturers for bonding and grouting materials in other than Portland Cement Mortar.

B. Protection:

1. Protect adjoining work surfaces before tile work begins.

2.2 PRODUCTS AND MANUFACTURERS

2.2.1 TILE:

A. General Requirements:

1. Standard Grade: ANSI Al37.1.
2. Glazed wall tile shall be frost-proof type when used on exterior or in refrigerated spaced.
3. Factory mounting: Factory mount ceramic mosaic tile and other tile designated as "mounted" into sheets of patterns selected.
4. Colors, finishes, patterns and sizes:
5. Slip-resistant floor tile:

   a. For all showers, drying areas entries or vestibules and similar wet areas.
   b. Abrasive content: Section 6a2.9, ANSI A137.1.

6. Shopes shall be in accordance with the ANSI 1327.1 as follows:

Item	Mortar Set	Thin Set
Cap	A4402 or A4640	S4449 or S4649
Wainscot Base	A3401 or A3641	A3401 or A3641
Base (no A3610 Wainscot)		
Outside Corners	A4402 or A4460	S4449 or 54469
Inside Corners	Butt Joint Only	

B. Glazed Porcelain Type Ceramic Mosaic Tile: Floor

1. Conforming to Section Ga, ANSI A137.1.
2. Edge: Cushion; thickness: 3/16 inch minimum.

C. Glazed Natural Clay Type Ceramic Mosaic Tile:Floor

1. Conforming to Section Ga, ANSI A137.1.
2. Edge: Cushion.

D. Glazed Ceramic Porcelain Mosaic Tile:

1. Conforming to Section 6b, ANSI A137.1.
2. Edge: Cushion; 3/16 inch minimum.

2.2.2 ACCESSORIES

A. Soap holders and grab; recessed style with extended lip drain. Similar to American Olean No.641.

B. Marble Threshold:

1. Domestic marble conforming to ASTM 0503-67, Exterior Marble,or Group A classification in accordance with the Marble Institute of America.
2. Marble shall have an abrasive hardness Ha)with a minimum of 10 when tested in accordance with ASTM C-241
3. Thickness not less than 1-1/4 inches except for level edges.
4. Honed finish on all exposed surfaces.
5. One piece for full width of door openings up to 4 feet.

2.2.3 SETTING MATERIALS:

A. Portland Cement: ASTM 0150-71, Type I.

B. Sand: ASTM C144-70.

C. Hydrated Lime: ASTM 0206 or 0207,Type 5,Special Finishing Hydrated lime. ID. Water: Clean free from deleterious amounts of oil, acidialkali, or organic matter.

D. Reinforcement:

1. Welded wire fabric conforming to ASTM A-185-70, size 221616.
2. Keydeck galvanized reinforcing Style No. 2160-2-1619 as manufactured by Keystone steel and Wire, is acceptable.

F. Dry-set mortar conforming to ANSI A118.l.

2.2.4 GROUTING MATERIALS:

A. Colors as specified under Section 1.10, Color Design.

B. White Portland Cement: ASTM Cl50, Type I.

C. Inorganic mineral pigments, acid free, non-fading, lime and alkali proof colors which will not react with other ingredients.

D. Commercial Portland Cement grout of type recommended by the manufacturer of the tile.

E. Mastic grout conforming to Tile Council of America Formula 768-4, C!E. Kaiser Company, Kolor-Bleup is acceptable.

F. Epoxy Grout conforming to Tile Council of America Formula UGh or ANSI A118.3.

1. Grout shall be unsanded for glazed tile.
2. Grout shall be chemical resistant for kitchens.

2.2.5 EXPANSION JOINT MATERIALS:

A. Back-up Material:

1. Flexible and compressible type, premolded,closed cell, vinyl, neoprene, or other approved material, strips. Similar to Progress Unlimited, Inc., FF-1 or FF-2 gasket which are acceptable.
2. Non-staining and compatible with sealants used.

B. Sealant:

1. Colors as specified in Section 1.10: Color.
2. Non-snag type with minimum shore and hardness of 35.
3. Conforming to Federa Specification TT-S-230; TT-S-227, Type I for joints in horizontal surfaces and Type II For joints in vertical surfaces;or TT-S-001543,Class A or B.

PART 3 - EXECUTION

3.1 INSPECTION OF SURFACES:

A. Inspection:

1. Examine surfaces to receive tile and accessories for installation begins for:

   a. Defects or conditions adversely affecting quality and execution of tile installation:
   b. Deviations beyond allowable tolerances of surfaces to receive tile.
   c. Maximum variation on sub-floor: 1/4 inch in 10 ft
   d. Maximum varljion in vertical surfaces: 1/4 inch in 8 ft
   e. Variations exceeding the above are not acceptable.

2. Do not proceed with installation work until unsatisfactory conditions are corrected.

B. Conditions of Surfaces to Receive Tile:

1. Surfaces shall be firm, dry, clean and free of oily or waxy films.
2. Grounds, waterproof membranes, metal pans, anchors, plugs, hangers, bucks, electrical and mechanical work in or behind tile shall be installed prior to proceeding with tile work.

3.2 INSTALLATION:

A. Prepare surface, fit, set or bond, grout and clean in accordance with applicable requirements of ANSI standards for setting method specified except as otherwise noted.

B. Area shall be measured and tile work laid out in a workmanlike manner so that:
1. Floor and wall tiles are full size wherever possible with no tile less than 1/2 sizes; saw cut where necessary.
2. Courses are maintained as indicated on drawings;
3. Where wainscot height is dimensioned, courses shall not exceed dimension by more than 1/2 tile;
4. Caps - internal and external angle pieces are full tiles (cutting permitted only as directed); and
5. Joints between shapes and flats are on least exposed surfaces.

C. Ceramic Mosaic Floor Tile - Portland Cement Mortar setting beds:
1. Conform to ANSI AlO8.2.
2. Setting beds - 3/4 inch minimum thickness and screeded levels or to slopes as shown, but not over 1-1/4 inches thick.
3. Reinforced with mesh placed at center of bed and held back 1 inch away from walls or expansion joints.
4. Bed shall be .1 part Portland Cement, 5 parts sand and 1/5 part lime.
5. Back of tile or setting bed given a 1/16 inch thick skim coat of neat Portland Cement paste just prior to placing tile.
6. Area as large as can be covered before mortar takes initial set, laid in one operation.

   a. If part of setting bed is not covered in such operation, the uncovered portion shall be removed back to clean bevelled edge close to finish tile.

   b. Tile shall be beat into place within 1 hour after placing mortar setting bed.

   c. Joints between sheets of mounted tile uniform with joints between mounted tile.
7. When mortar beds have set, sufficiently grout and cure all joints.
8. Expansion and control joints minimum 1/3 inch wide,Thru tile and bed, shall be provided for each 24 feet of width and length and at all walls as recommended by the Tile Council of America. Rooms less than 12 x 12 feet do not require expansion joints.

NOTE: Contractor shall have the option to set floor tile in accordance with ANSI Spec. 108.5. Ceramic Tile installed with Dry-set Portland Cement Mortar. Where there are no depressed slab areas indicated on the drawings, floor tile shall be set in accordance with ANSI Spec. 108.5.

9. Install marble thresholds with mortar as used for setting ceramic tile. ~~Joints between pieces shall be tight and not over 1/16 inch wide.~~
10. Install edge strips:

    a. At openings without thresholds and similar, discontinuous edges of floor tile meeting other flooring materials occur. Floors shall finish flush unless shown otherwise.

b. Set edge strips centered under door where strips occur at door openings.

c. Set edge strips where ceramic tile covered base is combined with other types of flooring.

D. Grouting of Joints:

1. color as selected under Section 1.10, color Design.
2. Wall tile joints shall be grouted with neat cement grout, Commercial Portland Cement grouts or mastic grout, unless otherwise noted.
3. Floor tile joints shall be grouted Commercial Portland Cement grout recommended by manufacturer of tile, unless noted otherwise.
4. Use chemical resistant epoxy grout in kitchens.

E. Expansion and Control Joints:

1. Strips installed full depth of mortar bed.
2. Tile joint sealed with polymer sealant not less than 1/8 inch deep.

3.3 REPAIRS, PROTECTION AND CLEANING:

A. Remove all loose, broken, cracked or otherwise defaced tiles and replace with perfect tiles.

B. As each room is finished, provide adequate protection as required. Damaged work shall be replaced with new. Do not permit traffic over completed work for 72 hours.

C. Finished work shall be left clean:

1. Remove all traces of cement, mortar, grout and dust.
2. Acid will not be permitted for cleaning unglazed tile until 10 days after setting and will not be permitted at all for cleaning glazed tile.

END OF SECTION

SECTION 07400 - QUARY TILE

PART 1 - GENERAL

1.1 RELATED DOCUMENTS

A. Drawings and general provisions of the contract, including General and Supplementary Conditions and Division 1 Specification Sections, apply to this Section.

1.2 DESCRIPTION OF WORK:

B. This section includes the furnishing and installing of all quarry tile, mortar beds, setting mortar and by adhesive and grout.

1. Under this section furnish and install everything usually considered necessary for a complete job and ordinarily provided whether or not actually mentioned, including examination and preparation of surface to receive tile. See drawings and furnish schedule.

2. Work under this section shall be coordinated with work set forth in other sections so that work shall proceed in an orderly manner,

1.3 RELATED WORK SPECIFIED ELSEWHERE:

A. Concrete Work: Section 03301

B. Masonry Work: Section 04010

C. Ceramic Tile: Section 09310

D. Toilet Partitions: Section 10200

E. Plumbing: Section 15

F. Electrical: Section 16.

1.3 SUBMITTALS:

A. See Special Stipulations for submittal requirements

B. Submit the following samples:

1. Tile: Two pieces each color and type.

2. Grout: Two 1/2 pint samples.

3. control joint materials:

a. Filler strip: 12 inch length.

b. Sealer: One tube or 1/2 pint if in liquid form.

4. Edge strip: 12 inch long sample.

C. Certificates:

1. Tile: Furnish Master Grade Certificate for all tile in accordance with ANSI A 137.1.

2. Mortars, adhesives and grouts: Dry set, epoxy, furan.

D. Manufacturer Instructions for commercial Portland Cement grout, epoxy, or furan products used.

1.4 PRODUCT LABELING, DELIVERY, AND HANDLING:

A. Delivery materials in manufacturers original sealed containers.

1. Labels legible and intact identifying band name and contents.

2. Tile catons grade-sealed by manufacturer in accordance with ANSI A137.1-1967. Grade seal printed on cartons.

3. Manufacturers mortars, grouts and adhesives in containers with hallmarks certifying compliance with reference standards.

B. Deliver grouts ready for use.

C. Deliver dry set mortar in sealed moisture-proof containers.

D. Store materials under cover in manner to prevent damage or contamination.

1.5 JOB CONDITIONS:

A. Environmental:

1. Set and grout tile in Portland cement mortar when ambient temperature is at least 50°F, and rising.

2. Comply with minimum temperature recommendations of manufacturers for bonding and grouting materials in other than Portland cement mortar.

B. Protect adjoining work surfaces before tile work begins.

PART 2 - PRODUCTS

2.1 QUARRY TILE:

A. Conform to Section 7, ANSI A137.1 Standard grade.

B. Sizes, colors and patterns as specified under Section

1. Nominal face size shall be 6x6 inches unless noted otherwise.

2. Edges shall be square unless noted otherwise.

C. Tile shall be grease and acid resistant, underside scored for bond, floor tile shall have an adhesive aggregate embedded inexposed surface conforming to requirements of Section 6, par. Ga. 2.9 of ANSI A137.1 to produce a slip resistant finish except when tile has a textured surface pattern.

D. Tile shall have a factory applied wax coating on the exposed face when furan resin mortar or grout is used.

E. Base:

1. ~~Q3565, bull nose top edge surface applied.~~

2. 03566, straight top edge for flush joint with other finishes

F. Step nosing: trim shope Q6665.

2.2 EDGE STRIP AI4D THRESHOLDS:

A. Edge Strips:

1. Terrazzo type divider strip with 1/8 inch thick top sections with 3/16 inch recess for composition flooring where applicable, manufactured in either extruded one piece style or two piece style of zinc or brass.

2. Similar to American terrazzo Strip Co. type K. or as approved.

B. Marble Threshold:

1. Domestic marble conforming to ASTM C503, Exterior Marble, or Group A classification in accordance with the Marble Institute of America.

2. Marble shall have an abrasive hardness (Ha) with a minimum of 10 when tested in accordance with ASTM C241.

3. Thickness not less than 1-1/4 inches except for bevel edges.

4. One piece for full width of door openings up to 4 feet.

2.3 SETTING MATERIALS:

A. Portland Cement: ASTM ClSO, Type 1.

B. Sand: ASTM C144-70.

C. Hydrated Lime: ASTM C206 or C207, Type S. Special Finishing Hydrated Lime

D. Water: Clean and free from deleterious amounts of oil, acid alkali, organic matter.

E. Reinforcement:

1. Welded wire fabric conforming to ASTM A185, size 221616.

2. Keydeck galvanized reinforcing, style No. 2160-2-1619, as manufactured by Keystone Steel and Wire is acceptable.

F. Dry set mortar conforming to ANSI A118,1

G. Furan material shall conform to ASTM C395

1. Two component mix consisting of a liquid furan resin and a powder hardener suitable for tile work.
2. Resin shall not contain any non-polytnerized solid or more than 3 percent water by weight.
3. Powder shall consist of hardener and inert filler.
4. Epoxy material shall conform to ANSI A110.3

2.4 GROUTING MATERIALS:

A. Colors as specified under Section 1.10, Color Design.

B. Furan material shall be the same as specified for mortar.

C. Epoxy material shall conform to ANSI A11B.3

D. White Portland Cement: ASTM CISO, Type 1.

E. Inorganic mineral pigments, acid free, non-fading, lime and alkaliproof colors which will not react with other ingredients.

F. Commercial Portland cement grout of type recommended by manufacturer of the tile.

2.5 EXPANSION JOINT MATERIALS:

A. Back-Up Material:

1. Flexible and compressible type premolded closed cell vinyl neoprene, or other approved material strips. Similar to Progress Unlimited, Inc. FF-1 or FF-2 gaskets which are acceptable.
2. Non-staining and compatible with sealants used.

B. Sealant:

1. Color as specified under Section 1.10, Color Design.
2. Non-sag type with a minimum shore A hardness of 35.
3. Conforming to Federal Specification TT-S-230, TT-S-227, Type I, or TT-S-001543, Class A or B.

PART 3 - EXECUTION

3.1 INSPECTION OF SURFACES:

A. Inspection:

1. Examine surfaces to receive tile before installation begins form.
   a. Defects or conditions adversely affecting quality and execution of tile installation.

   b. Deviations beyond 1/4 inch in 10 fteet in sub-floor or 1/4 inch in 8 feet for base in vertical surfaces.

   c. Variations exceeding the above are not acceptable.

2. Do not proceed with installation work until unsatisfactory conditions are corrected.

B. Conditions For Surfaces To Receive Tile:

1. Surfaces shall be firm, dry, clean and free of oily or waxy films.

2. Grounds,waterproof membranes or metal pans, anchors, plugs frames, electrical and mechanical work in or behind tile work shall be installed prior to proceeding with tile work.

3.2 INSTALLATION:

A. Prepare surfaces, fit, set or bond, grout and clean in accordance with applicable requirements of ANSI standards for setting method specified except as otherwise noted.

1. Surfaces swept clean, holes patched, all debris removed and slabs shall be cured and dimentionally stable.

2. Concrete surfaces to receive with tile using either Furan resin mortar or epoxy resin mortar shall be prepared as follows:

   a. Etch concrete with solution of one part 31.5% nuriatic acid to 2 parts water by volume, apply to deck until solution runs, rinse thoroughly with

water and allow to dry.

b. After rinsing deck neutralize with a solution of one cup ammonia to one gallon of water liberally applied until solution runs, allow to remain a minimum of thirty minutes, rinse thoroughly and allow to dry.

c. Concrete surfaces to receive epoxy mortar shall be free of sealers, coatings, oil, dirt and dust. Surfaces shall be reasonably dry with no free water on surface.

d. Surfaces shall be free of chalky laitence or powdery material.

e. Surfaces with chalky laitence, sealers, coatings and oil shall be cleaned as specified in Paragraph 2.

NOTE: Proof of satisfactory experience with other Manufactures recommended method of surface preparation for a period of not less than 5 years shall be submitted with manufacturers instruction for application.

B. General:

1. Areas shall be measured and tile work laid out in a workmanlike manner to pattern specified in Section 1.10.

2. Floor tile shall be full size wherever possible, cutting tile at wall line or for penetrations only.

3. Joints shall be uniform and true, maintained straight from wall to wall, not over 3/8 in. in width for entire length in either direction.

4. Internal and external angle pieces of base shall be full tiles.

5. ~~Exposed external corners shall have bull~~ nosed edges unless noted otherwise.

6. Materials and workmanship shall be in strict compliance with the American National Standards Institute Specifications and the "Handbook for Ceramic Tile Installation" as published by the Tile Council of America, Inc., unless specifically modified herein.

C. Portland Cement Mortar Bed:

1. Conform to ANSI A108.3

2. Mortar mix shall be 1 part portland cement, 5 parts sand and 1/5 part limes, by volume.

3. Mortar bed shall be 1-!(inches minimum thickness and screeded level except 3/4 inch minimum where sloped to drains.

4. Bed shall be reinforced with mesh placed at center of bed and held back 1 inch away from walls, and expansion joints.

D. Setting Tile Neat Cement:

1. Back of tile or setting bed given a 1/16 inch thick skim coat of neat portland cement paste just prior to placing tile.

2. Tile shall be beat into place within 1 hour after placing mortar setting bed.

3. Area as large as can be covered before mortar takes initial set, laid in one operation.

4. If part of setting bed is not covered in such operation, uncovered portion shall be removed back to clean bevelled edge close to finished tile work.

NOTE: Contractor shall have the option to set tile in accordance with ANSI Spec. A108.5 Ceramic Tile Installed ~~with Dry-set Portland Cement Mortar.~~

5 . When mortar beds have set sufficiently grout and cure all joints.

a. Color as selected by submittal & as directed by the COTR.

b. Grout with neat cement grout, commercial Portland cement grout or mastic grout unless otherwise noted.

E. Setting Tile in Furan or Epoxy Resin:

1. Conform to ANSI A108.6 for epoxy resin and to manufacturing Specifications for Furan resin.

2. Setting bed:

a. Continuous, not less than 1/8 inches thick, applied with notched edge trowel to an area than can be tiled during the "open time" of the mortar.

b. On a previously placed cement mortar bed that has cured. Not less than 24 hours or on plane clean concrete. Setting bed shall be completely cured and dry for furan setting materials.

3. Apply mortar to backs of tiles to completely fill all grooves.

4. Place tile on setting bed.and bear lightly to a true, level place.

5. Allow setting bed to cure for twenty-four hours at a floor temperature of 60°F.

6. Joints shall be grouted with a furan or epoxy mortar as used for setting bed.

F. Expansion Joints:

1. Expansion or control joints 3/8 inches wide, thru tile and bed, shall be provided for each 24 feet of width and length and at all walls as recommended by The Tile Council of America, Inc. Rooms less than 12x12 feet do not require expansion joints.

2. Filler Strips shall be installed full depth or mortar bid to within 1/4 inch of tile surface.

3. Tile joint sealed with polymer sealant not less than 1/4 inch deep in lieu of grout after grouting and pointing.

G. Thresholds and Edge Strips:

1. Install marble thresholds with mortar as used for setting tile with fight-narrow joints between pieces.

2. Installing edge strips:

a. At openings without thresholds and similar discontinuous edges of floor tile meeting other flooring materials occur. Floors shall finish flush unless shown otherwise.

b. Set edge strips centered under door where strips occur at door openings.

3.3 REPAIRS. PROTECTION AND CLEANING:

A. Remove all loose, broken, cracked or otherwise defected tiles and replace with perfect tiles.

B. Finished work shall be left clean:

1. Remove all traces of cement, mortar, grout and dust.

2. Acid will not be permitted for cleaning tile until 10 days after setting.

END OF SECTION

LIGHTING FIXTURES:

OFFICE AREAS:
LITHONIA 2PM3NGB 332

CORRIDORS:
LITHONIA 2PM232NGB232

MECHANICAL AREAS:
LITHONIA EJSA SERIES

STAIRS:
LITHONIA 1THP2

EXIT LIGHTS:
LITHONIA LVSW1R OR 2R AS REQUIRED

HIGH BAY AREAS:
EXISTING HIGH BAY FLUORESCENT FIXTURES

Security camera specifications

- The contractor shall install 5 (five) strategically located exterior cameras.

- All the cameras shall be high resolution color dome models with vandal resistant housing, mounted high on the building with built in illuminator capable of illuminating up to 90' away.

- All installed cameras shall report to a Digital Video Recorder. The recorder shall be connected to the LAN for remote access for viewing and playback of video. The system shall be able to accommodate 8 (eight) additional cameras.

- The contractor shall furnish and install 2 -17" flat screen monitors for local live viewing,

- The contractor shall furnish a one year warranty on all parts and labor on all the equipment and installation. The one year warranty shall begin on the date of acceptance of the work.

- **Open IP Standards**
- **Up to 1.3 Megapixel Resolution (1280 X 1024)**
- **Up to 30 Images per Second (ips) at 1280 x 720**
- **Interchangeable CS-Mount Lenses (Optional)**
- **Auto Back Focus for High Precision Focusing**
- **H.264 and MJPEG Compression**
- **Day/Night Capability**
- **Video Setup Jack**
- **Sensitivity Down to 0.03 lux**
- **Power over Ethernet (IEEE 802.3af) or 24 VAC**
- **Focus Button with Delay Enables Precision Focus Through Bubble**
- **Up to 2 Simultaneous Video Streams**
- **Web Viewing, up to 16 Cameras Simultaneously**
- **Local Storage (Micro SD) for Alarm Capture**

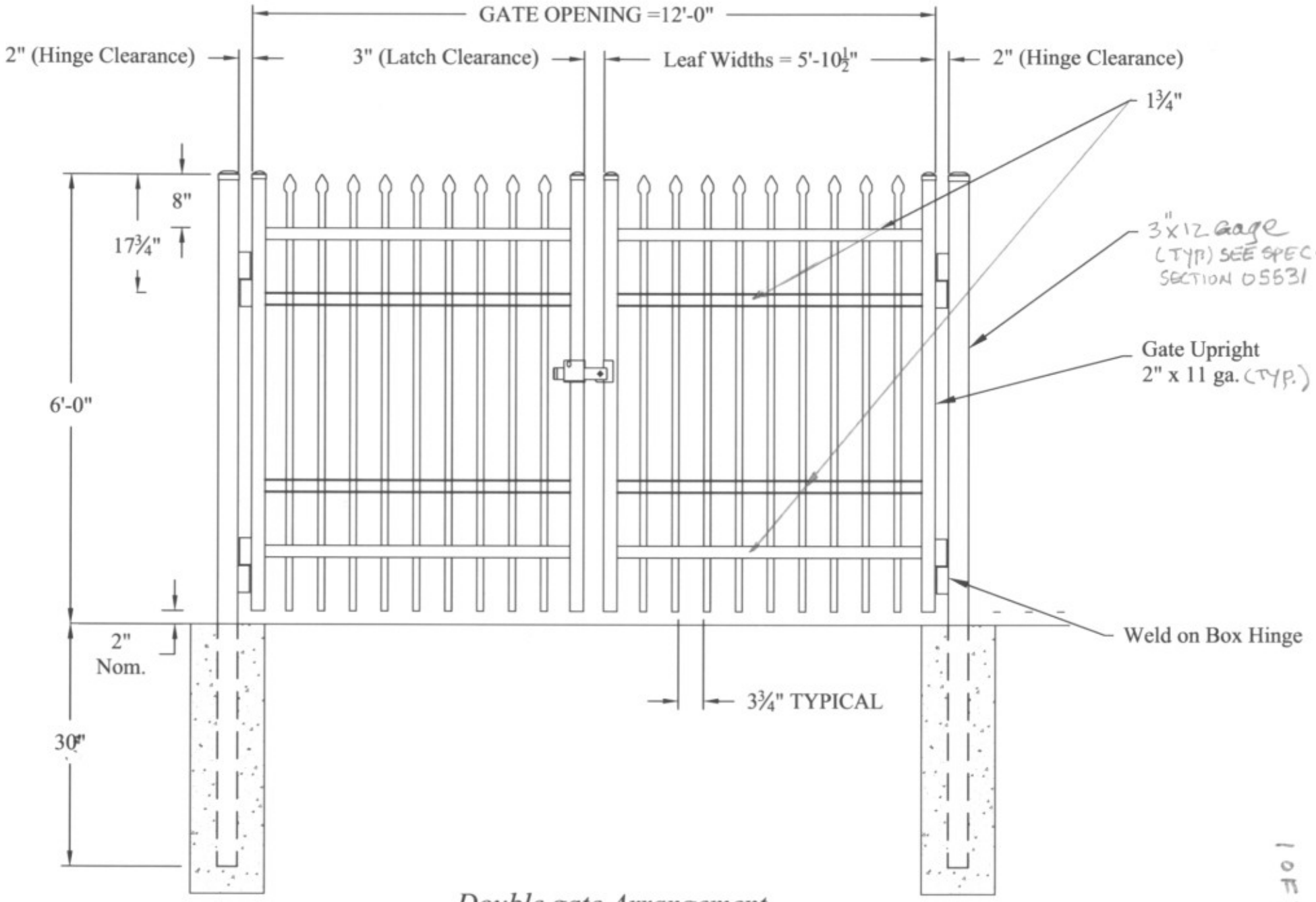

Double gate Arrangement

1 of 3

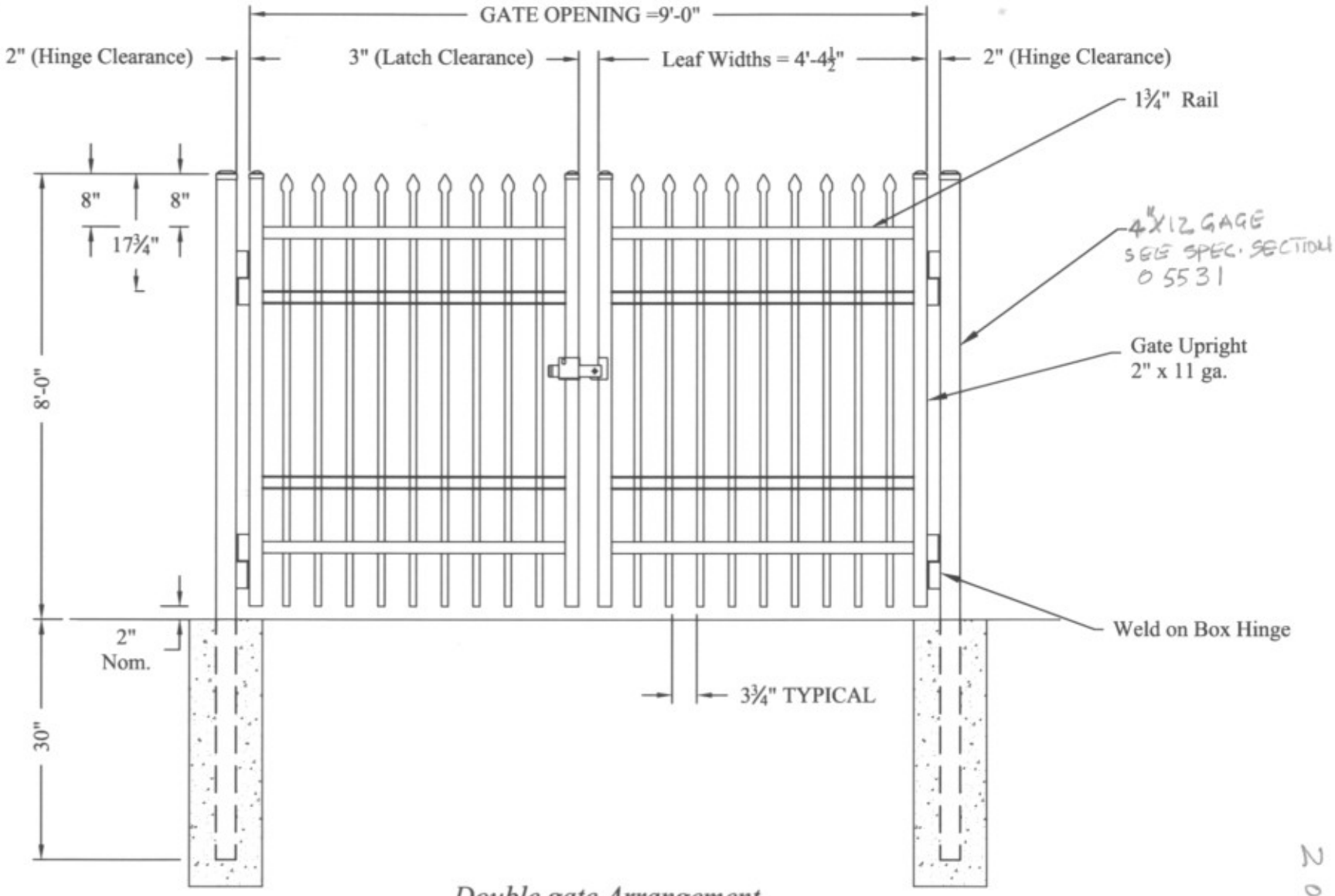

Double gate Arrangement

2 of 3

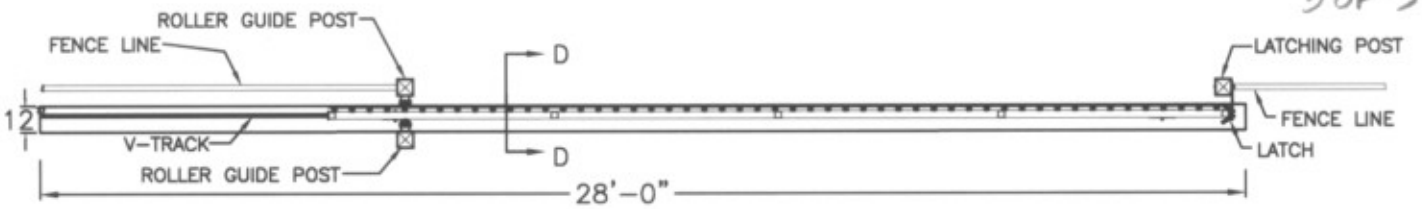

PLAN

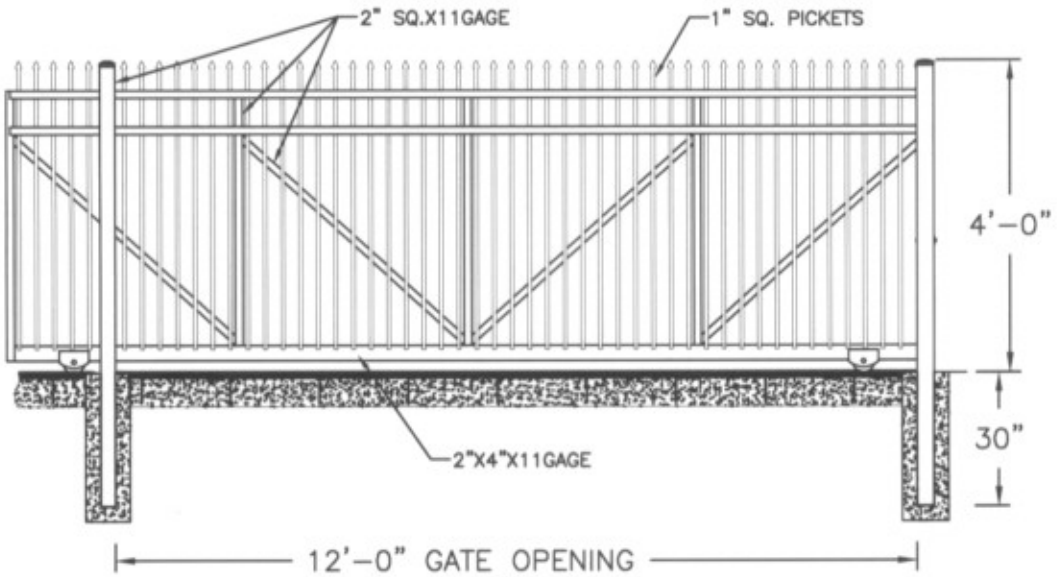

3 RAIL Roll Gate

(SEE MANUFACTUERS' GUIDE FOR INSTALLATION)

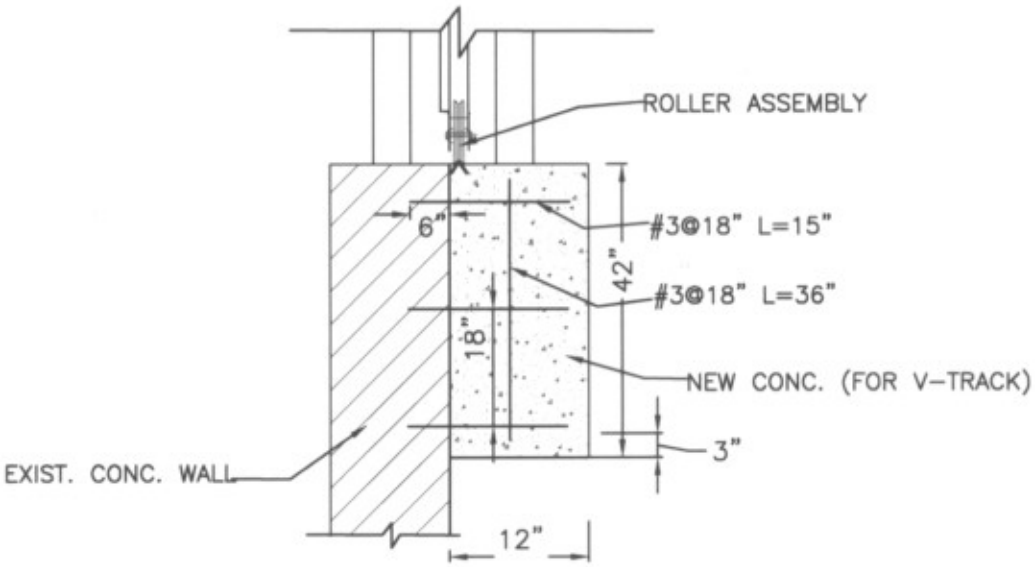

SECTION D-D

NTS

Elite Interiors
7 Series

RETRO

HOME

Cab Package

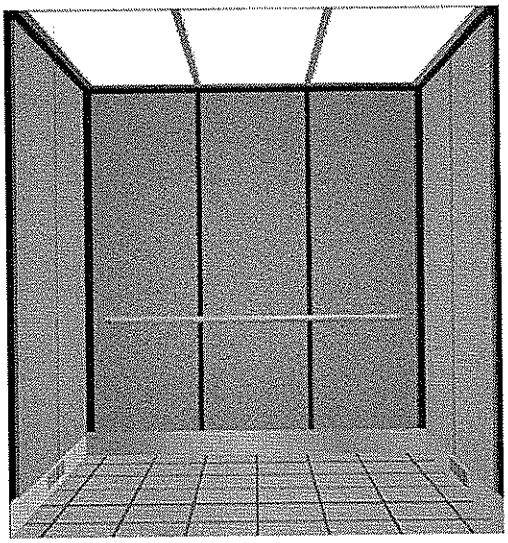

Package 7-1

Interior Details:

- Seven raised panels faced with standard grade plastic laminate and edge-banded in black PVC
- Satin stainless steel base (toe-kick) with punched ventilation slots
- Black plastic laminate reveals between panels and frieze above panels
- Aluminum frame ceiling with removable diffuser panels
- Satin stainless steel rear wall handrail (Either flat bar or tubular)

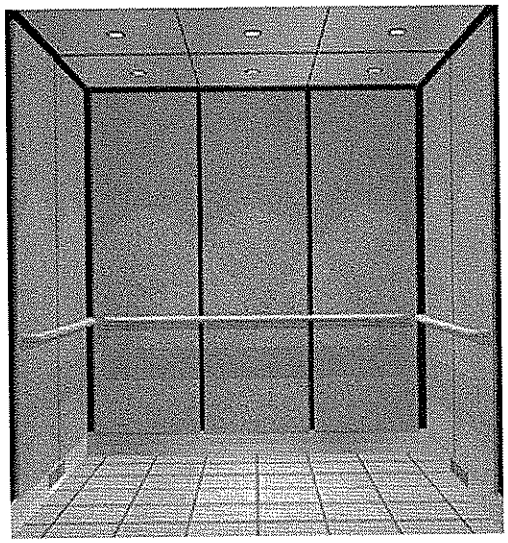

Package 7-2

Interior Details:

- Seven raised panels faced with standard grade plastic laminate and edge-banded in black PVC
- Satin stainless steel base (toe-kick) with punched ventilation slots
- Black plastic laminate reveals between panels and frieze above panels
- Halogen downlight ceiling faced with satin stainless steel and black painted reveals separating six panels
- Satin stainless steel rear and side wall handrails (Either flat bar or tubular)

Interior Details:

- Seven raised panels faced & edge wrapped with textured stainless steel
- Satin stainless steel base (toe-kick) with punched ventilation slots
- Black plastic laminate reveals between panels and frieze above panels
- Halogen downlight ceiling faced with satin stainless steel and black

PROTO TYPE PLUMBING FIXTURES:

WATER CLOSET: AMERICAN STANDARD "MADERA" 17" HIGH WITH CHURCH OPEN FRONT SOLID WHITE PLASTIC SEAT WITH CHECK HINGES AND SLOAN NO. 111 FLUSH VALVE.

LAVATORY: LUCERNE WITH 4-INCH CENTER DELTA 2520 HDF FAUCET AND METAL GRID STRAINER.

URINAL: LYNBROOK WITH SLOAN180-1 FLUSH VALVE.

SERVICE SINK: NO.7692 WITH RIM GUARD AND 8320-243 FAUCET AAND TRAP STANDARD.

SINK: 18 GAUGE STAINLESS STEEL ELKAY OR EQUAL TO LR-1919 WITH DELTA 140 FAUCET AND ½ HORSEPOWER DISPOSER.

WATER COOLER: OASIS OR EQUAL BARRIER FREE MODEL P8AMEE.

WALL HYDRANTS: JONESPSEC OR EQUAL TO SUIT WALL THICHNESS.

DOOR/FRAME SCHEDULE

DOOR NO	# OF DOORS	DOOR SIZE W	DOOR SIZE H	DOOR SIZE TH	DOOR MATL.	DOOR TYPE	FRAME DETAILS MATL.	FRAME DETAILS TYPE	FRAME DETAILS JAMB	FRAME DETAILS HEAD	FRAME DETAILS THRESHOLD	FIRE RATING	REMARKS	DOOR HARDWARE SCHEDULE
1	6	2'-8"	4'-10"	1 3/4"	HM	D-9	HM	2	C	C	T4	–	BATH ROOM STALL DOORS	HARDWARE SET No. HW- 9
11	3	2'-0"	4'-10"	1 3/4"	HM	D-10	HM	2	C	C	T5	–	BATH ROOM STALL DOORS	HARDWARE SET No. HW- 5
2	2	3'-0"	6'-8"	1 3/4"	HM	D-2	HM	2	B	B	T2	1 1/2 HR.	CORRIDOR	HARDWARE SET No. HW-4
3	5	3'-0"	6'-8"	1 3/4"	HM	D-3	HM	2	B	B	–	1 HR	OFFICE	HARDWARE SET No. HW-1
4	7	3'-0"	6'-8"	1 3/4"	HM	D-4	HM	2	A	E	T1	1 1/2 HR.	STAIR	HARDWARE SET No. HW-7
5	5	PR 2'-0"	6'-8"	1 3/4"	HM	D-5	HM	3	C	C	–	1 HR	OFFICE	HARDWARE SET No. HW-2
6	1	PR 2'-0"	6'-8"	1 3/4"	GLASS	D-6	ALUM.	3	D	D	T-2	–	STORE FRONT	HARDWARE SET No. HW-8
7	4	PR 2'-0"	6'-8"	1 3/4"	HM	D-7	HM	3	–	F	–	–	CLOSET	HARDWARE SET No. HW- 3
8	10	2'-8"	6'-8"	1 3/4"	HM	D-8	HM	1	B	B	T-3	1 HR	TOILET/COSTODIAN	HARDWARE SET No. HW-6
9	1	3'-0"	6'-8"	1 3/4"	HM	D-4	HM	2	B	B	T1	1 HR	LOCKER	HARDWARE SET No. HW-6
10	1	3'-0"	6'-8"	1 3/4"	HM	D-1	HM	2	B	B	–	1 1/2 HR.	OFFICE	HARDWARE SET No. HW-1

DOOR HARDWARE SETS

A. Hardware Set No. HW-1

Item	Description	Mnfr.-	BHMA
3 Hinges	BB1199-26D (A5111)	HAG	626
1 Lockset (Office)	CL3451-ASD (F82)	CR	626
1 Wall Stop	400	RM	---

B. Hardware Set No. HW-2

Item	Description	Mnf	BHMA
6 Hinges	BB1199-26D (A5111)	HAG	626
2 Lockset	CL3455-ASD (F84)	CR	626
2 Closer	4041-3077EDA DA	LCN	689
2 Wall Stop	400	RM	---

C. Hardware Set No. HW-3

Item (Each to have)	Description	Mnfr.	BHMA
8 Hinges	3CB1 4.5X4.5 NRB	IVE	652
2Full dummy trim	L9110XXL11-741 615	SCH	630
	10-091 FRONT	--	----
2Roller Latch	RL1152	IVE	626
2Overhead Stop	900S	GLY	630

D. Hardware Set No. HW-4

Item	Description	Mnfr.	BHMA
3 Hinges	BB 1199-260 (A5111)	HAG	626
1 Latchset (Passage)	CL3410-ASD (F75)	CR	626
1 Closer	4041-3077EDA DA	LCN	689
1 Kickplate	K 1062-10"	RM	626
1 Wall Stop	400	RM	--

E. Hardware Set No. HW-5

Item	Description	Mnfr.	BHMA
3 Hinges	3CB1 4.5X4.5	IVE	652
1 Lockset (Privacy set)	L9040 615 L583-363	SCH	630
1 Overhead Stop	900S	GLY	630
3Silencer	SR64	IVE	GRY

1 Closer	4041-3077EDA DA	LCN	689
1 Kickplate	K1062-10"	RM	626
1 Wall Stop	400	RM	---

G. Hardware Set No. HW-7

Item	Description	Mnfr.	BHMA
3 Hinges	BB 1199-26D (A5111)	HAG	626
1 Panic Hardware	F-18-C-LE Avalon (ANSI 08)	MaN	626
1 Closer	4041-3077EDA DA	LCN	689
1 Kickplate	K1062-10"	RM	626
1 Wall Stop	400	RM	---

H. Hardware Set No. HW-8

Item	Description	Mnfr.	BHMA
6 Storefront Pivots	Offset Type	Kawneer	---
2 Push Pull Devices	CO-12/CP-II	Kawneer	626
2 Concealed Closer	2030 (Single-Acting)	LCN	689

I. Hardware Set No. HW-9

Item	Description	Mnfr.	BHMA
1Lockset/Latchset	LOCKSET D405 /ATHENS EXTRA HEAVY DUTY CYLINDER	SCHLAGE	---
3Hinges	FBB-179, 4.5X4.5" FULL MORTISE.	STANLEY	---
1 Silencers	#20, GREY.	IVES	---
1 Door Stop	#438, B-26D FINISH	IVES	---
1 Strike	ANSI STRIKE 10-026 626 FINISH	SCHLAGE	---
1Closer	MODEL 4010 SERIES REGULAR ARM METAL COVER FINISH 626	LCN	

CONTROL SEQUENCES:

ROOF TOP UNITS:

PROVIDE A ROOM THERMOSTAT FOR EACH UNIT WITH A SUBBASE. LOCATION TO BE DETERMINED TO OPERATE AS FOLLOWS:
COOLING:
PROVIDE AND INSTALL ECONOMIZER CONTROL INCLUDING DAMPERS AS REQUIRED TO OPERATE THE DAMPERS AND COMPRESSOR AS REQUIRED TO MAINTAIN ITS SET POINT

HEATING:
WHEN INDEX TO HEAT, THERMOSTAT SHALL CYCLE GAS BURNER AS REQUIRED TO MAINTAIN ITS SET POINT.

PROVIDE A TIME CLOCK WITH 7-DAY CONTROLS TO OPERATE THE UNIT FAN CONTINOUSLY WHEN IN THE "DAY" MODE AND CYCLE FAN AND CLOSE THE OUTDOOR AIR DAMPER DURING THE "NIGHT"MODE WHEN INDEX TO "HEAT".

HIGH-BAY HEATING AND VENTILATING UNITS:

PROVIDE ROOM THERMOSTAT WITH A 7-DAY CLOCK TO CONTROL UNIT FOR EACH UNIT TO OPERATE AS FOLLOWS:

TO OPEN THE OUTDOOR AIR DAMPER AND OPERATE THE UNIT FAN CONTINUOUSLY AND CYCLE THE GAS BURNER AS REQUIRED DURING THE "DAY" OPERATION AND THE OPERATE THE UNIT ON A REDUCED TEMPERATURE SETTING AT NIGHT.

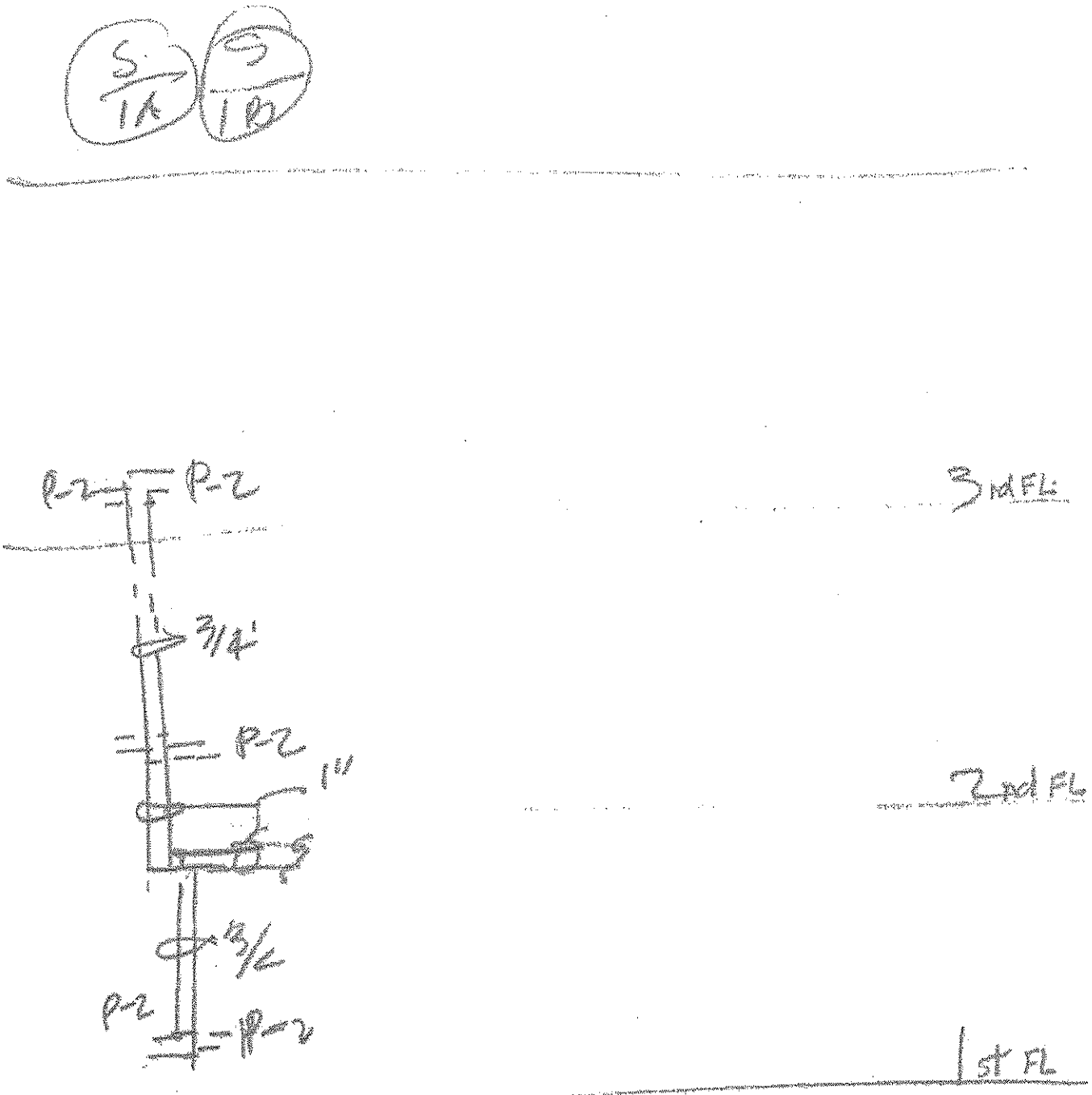

WATER MAIN DIAGRAM

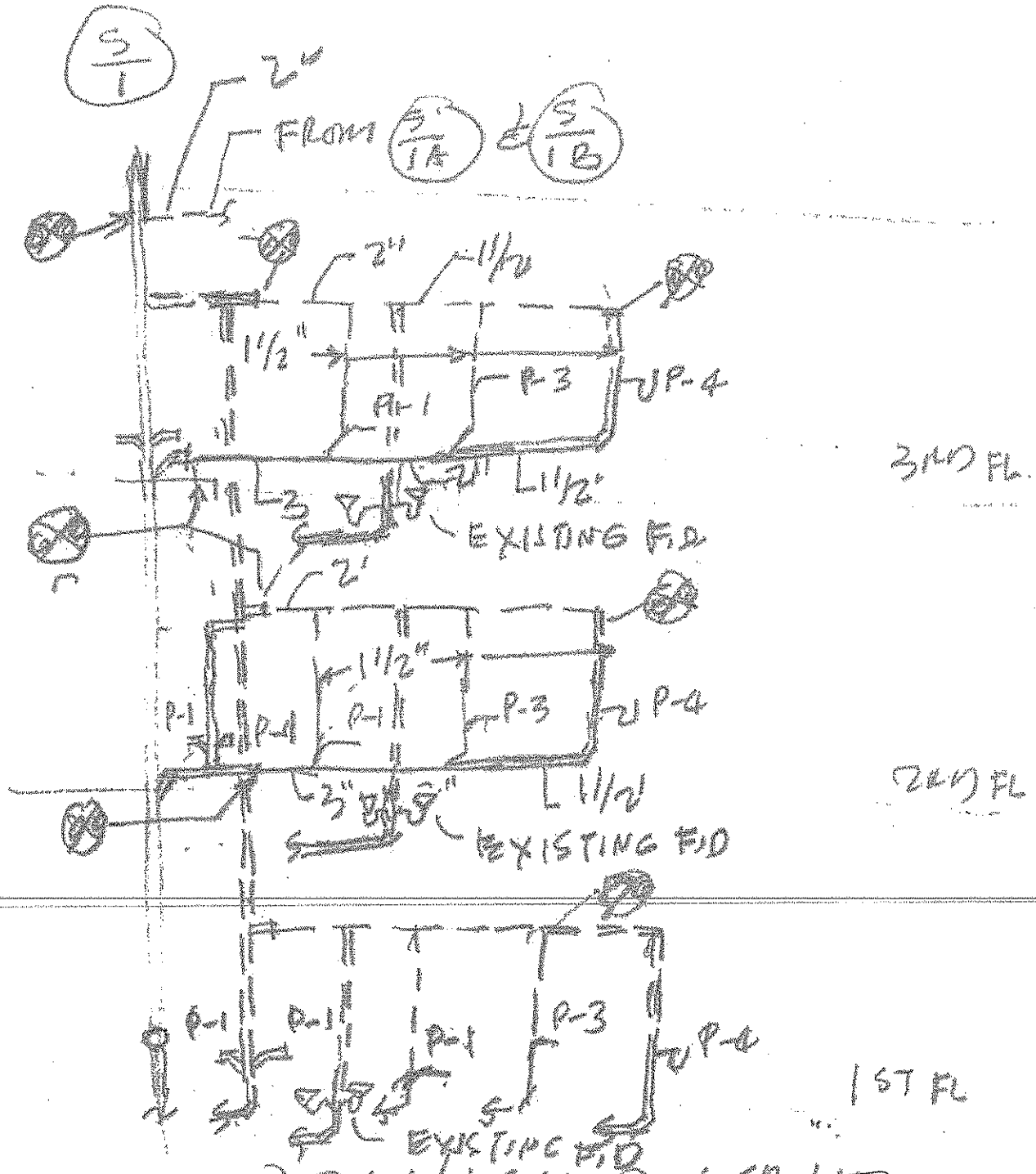

DRAINAGE DIAGRAM

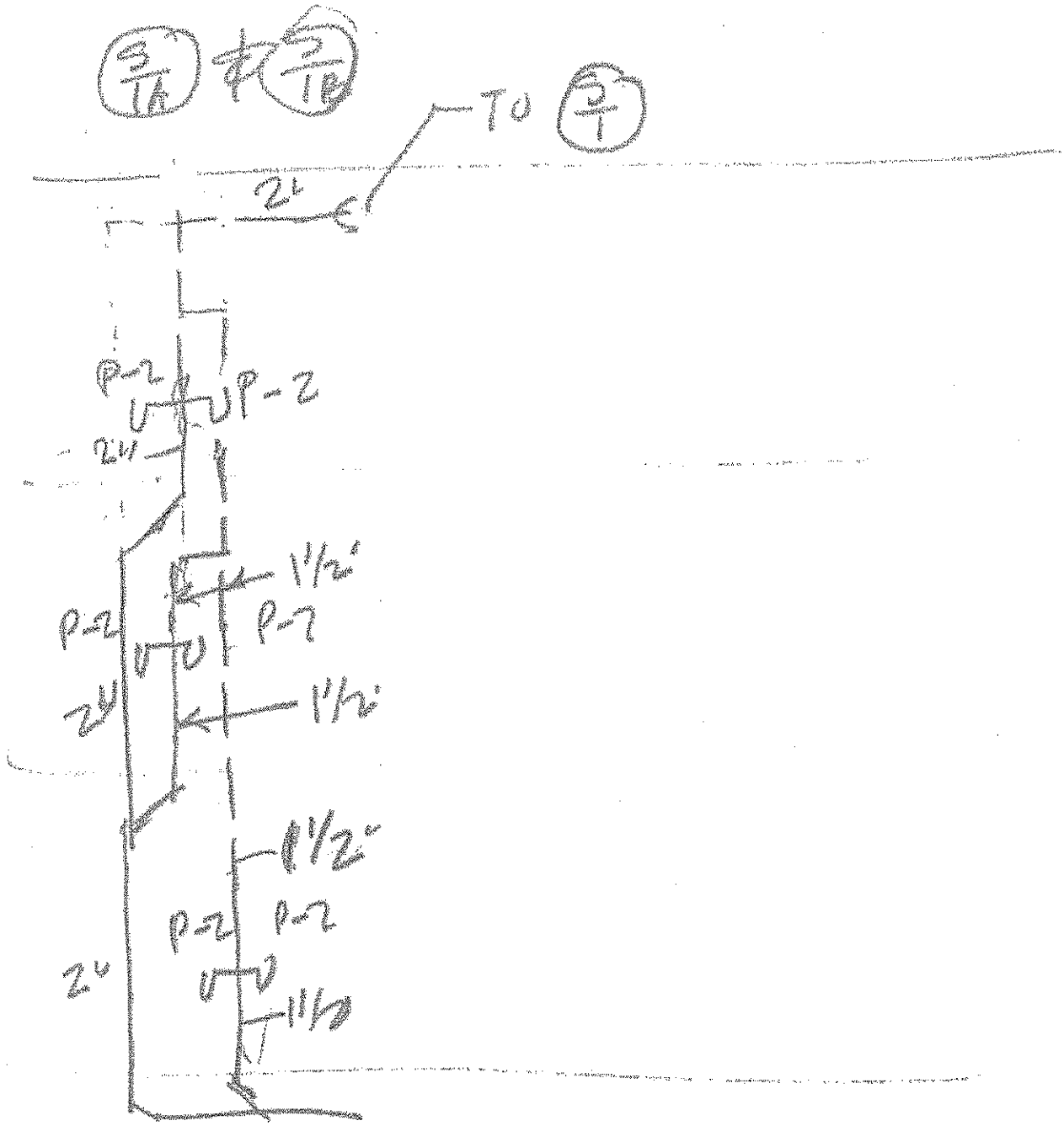

DRAINAGE DIAGRAM

LEGEND

- MH = MANHOLE
- WATER MH
- WELL
- ELECT. POWER MH
- TELEPHONE MH
- STORM DRAIN MH
- FIRE HYDRANT
- GAS VALVE
- CHAIN LINK FENCE
- METAL PICKET FENCE
- EX. = EXIST = EXISTING
- PR. = PROPOSED = NEW
- 74.1 = EXISTING ELEV
- X 74.2 = PROPOSED ELEV
- PROPERTY LINE
- F.C. FILL CAP
- CS COMBINED SEWER
- W PROPOSED WATER LINE
- S PROPOSED SEWER LINE
- SAN PROPOSED SANITARY
- F PROPOSED FIRE LINE
- WATER METER

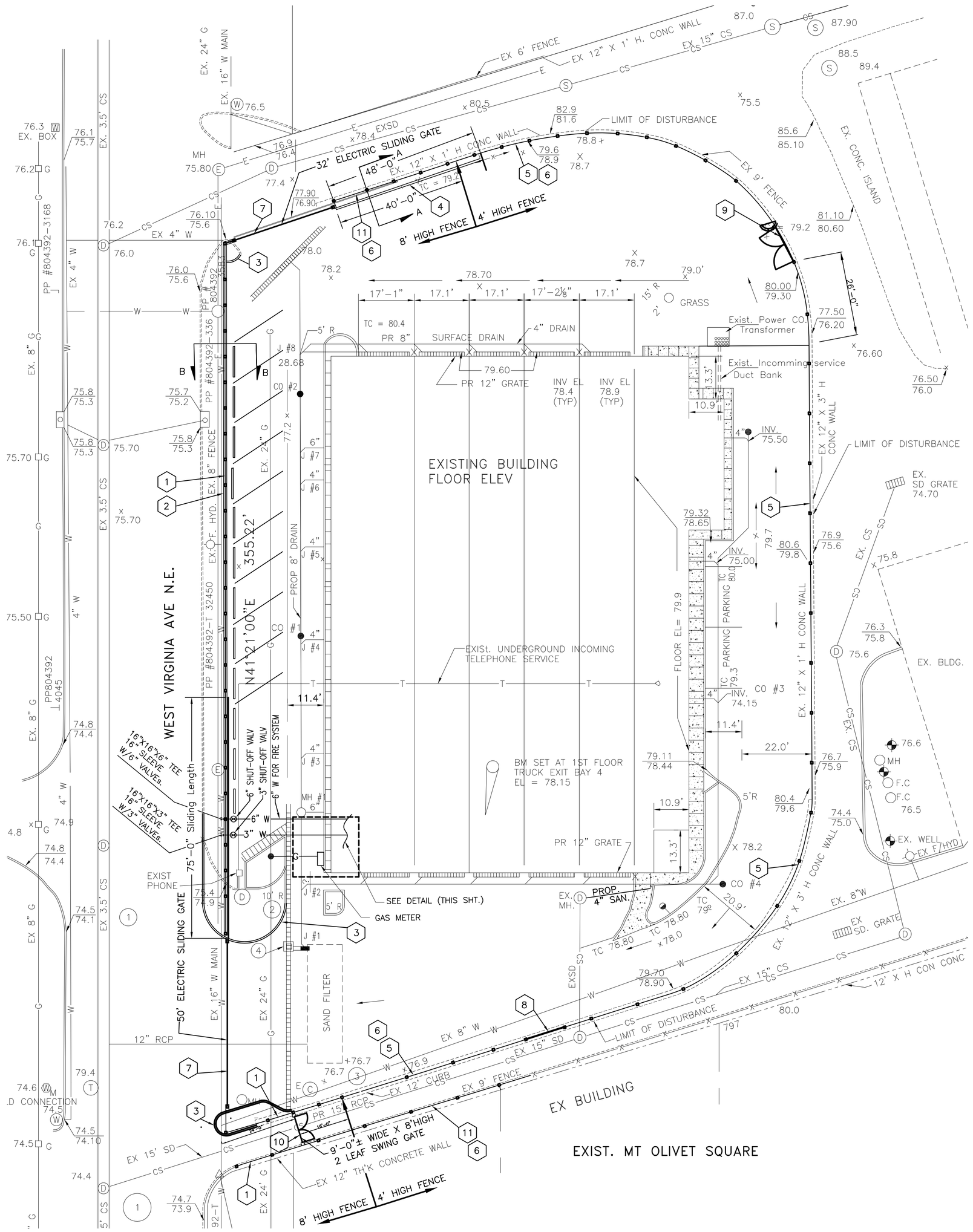

20' 10' 0 20'

SCALE: 1"= 20'-0"

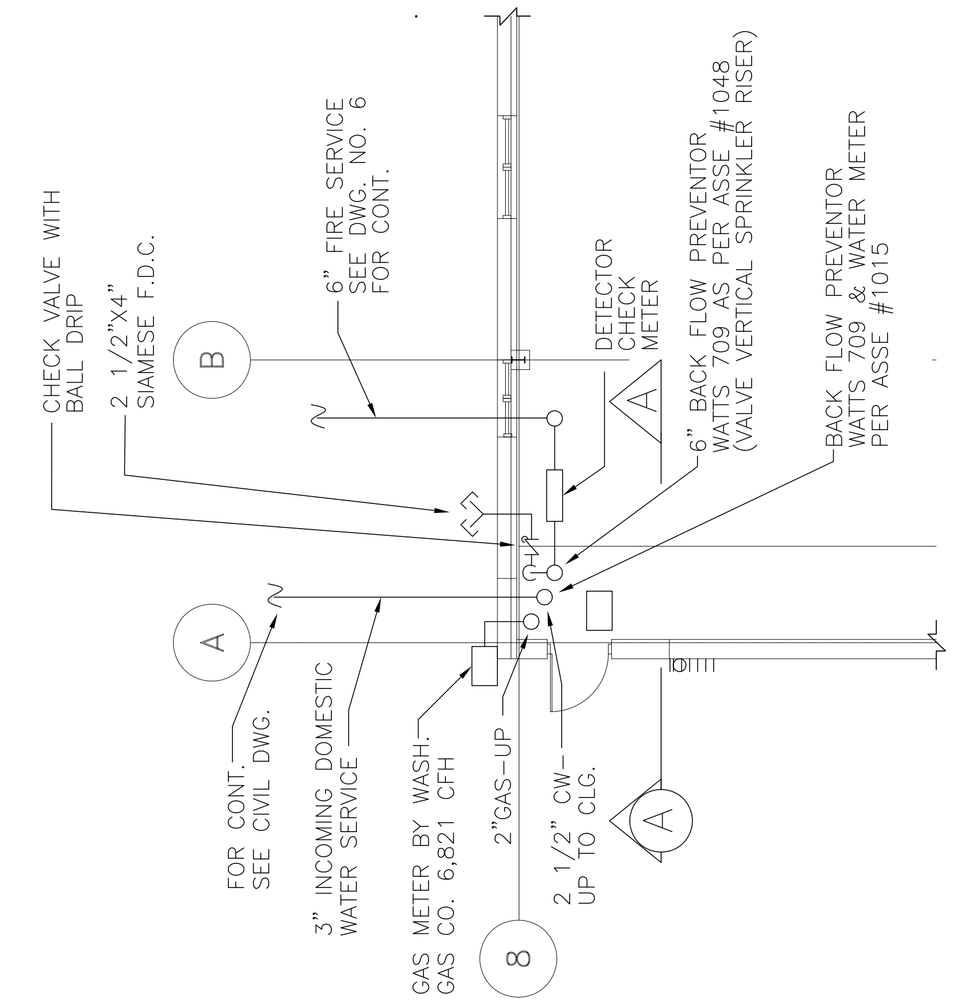

BACKFLOW PREVENTER & METER LAYOUT

SCALE: N.T.S.

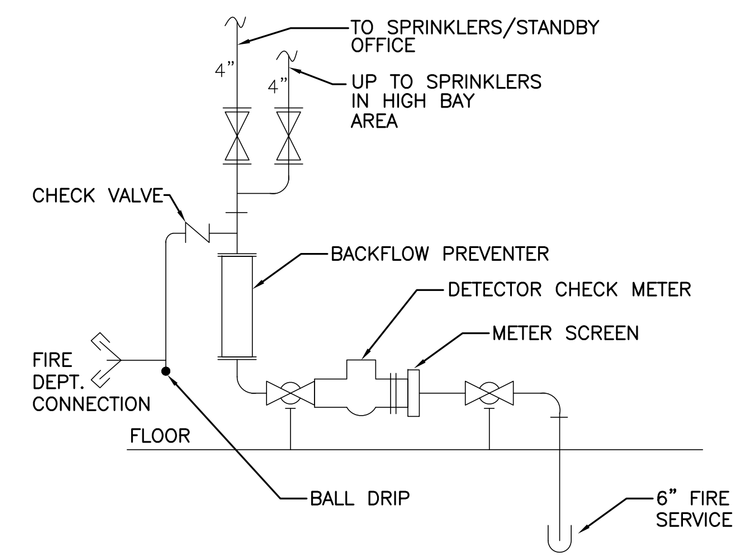

SECTION A / C2

CAPITOL ENGINEERS, P.C.
ENGINEERS – ARCHITECTS – PLANNERS
1012– 14TH STREET, NW SUITE 300 WASHINGTON, DC 20005

NO.	DESCRIPTION	NAME	DATE

REVISIONS

DISTRICT OF COLUMBIA
DEPARTMENT OF PUBLIC WORKS

BUILD OUT OF TIRE SHOP AND ADMINISTRATIVE OFFICES
1827 WEST VIRGINIA AVENUE, NE
WASHINGTON, DC

PROJECT ENG. ____
DESIGNED BY ____
CHECKED BY ____
DRAWN BY ____
PROJECT MGR. ____

PROPOSED SITE/UTILITY PLAN

C-2A

FILE ____
SHEET ____ OF ____

SECTION 02150 – WHEEL STOPS

PART 1 - GENERAL

1.1 RELATED DOCUMENTS

A. Drawings and general provisions of the Contract, including General and Supplementary Conditions and other Division 1 Specification Sections, apply to this Section.

1.2 DESCRIPTION OF WORK:

A. This section includes standing wheel stops for vehicular traffic.

B. Work under this section shall be coordinated with work set forth in other sections so that the finished installation will proceed in an orderly manner.

1.3 SUSMITTALS:

A. See Special Stipulations, Section 01300 for submittal requirements.

B. Samples of wheel stops materials and anchors.

C. Submit shop drawings showing wheel stop construction, layouts and installation details.

1.4 PRODUCT DELIVERY, STORAGE AND HANDLING:

A. Deliver products with labels intact. Labels shall identify product completely, in manufacturers original, unopened containers, where possible.

B. Store in accordance with manufacturer's recommendation, protected against the elements and contamination or damage.

C. Handle in such manner as to prevent damage to products or finish. Replace damaged or discolored wheel stops.

PART 2 - PRODUCTS

2.1 WHEEL STOPS:

A. Fabricate stops of solid molding of strand nylon and polyester and in sections 6 feet long, 5-1/2 inches wide at the bottom, 3 inches wide at the top, and 4 inches high. Exposed surfaces shall be smooth. Edges shall be rounded.

PART 3 - EXECUTION

3.1 INSTALLATION:

A. Secure each wheel stop with 3/4 inch solid steel rods with recessed theft-proof heads. Set stops level, straight and in true alignment.

END OF SECTION

BUILD OUT OF TIRE SHOP AND ADMINISTRATIVE OFFICES

SECTION 07510 – INSULATION (Batt or Blanket and Perimeter Type)

PART 1 - GENERAL

1.1 RELATED DOCUMENTS

A. Drawings and general provisions of the Contract, including General and Supplementary Conditions and Division 01 Specification Sections, apply to this Section.

PART 1 - GENERAL

1. 1 DESCRIPTION OF WORK:

A. Work under this section shall be coordinated with work set forth in other sections so that finished work shall be complete in every respect.

B. This section includes batt or blanket type insulation and rigid boards or block type insulation for use where shown and/or specified. See other sections for roof and mechanical insulation.

PART 2 - PRODUCTS

2.1 MATERIALS: When used shall conform to the following:

A Batt or Blanket Insulation:

1. Batts - Type I, Class A or B, Federal Specification HH-I 521 and Amendment #1; or
2. Blankets - Mineral wool conforming to requirements for batt material above.
3. Exposed inflammable covering or insulation will not be permitted.

B. Vapor barrier - waterproof paper - Federal Specification UU-B-790, Type I, Grade C, Style 4.

C. Joint Sealers:

1. Gummed paper tape - Federal Specification UU-T-111, heavyweight, Class 3.
2. Tape or adhesive - as recommended by manufacturer for sealing.

D. Rigid Insulation - Boards or Blocks:

1. Cellular glass (Foamglass) - Federal Specification HH-I551.

2. Polystyrene - Federal Specification HH-I-524, C Type IV self extinguishing.

3. Urethane - Federal Specification HH-I-00530A.

E. Adhesive for insulation - as recommended by manufacturer.

NOTE: Materials shall be delivered to the site in sealed unbroken packages, labeled or stamped with manufacturer's name and contents or each package.

F. When insulation is installed in walls and roof of building, wall construction must'achieve R=9 and roof construction must achieve R=30 minimum.

PART 3 - EXECUTION

3.1 INSULATION:

A. One of types of insulation, as approved, shall be installed in all locations indicated on the drawings and specified in EXTENT OF WORK, in a manner herein specified.

B. Batt or Blanket Insulation:

1 The Contractor has the option to furnish batt or blanket type insulation with vapor barrier as specified below.

a. Batt or blanket type insulation manufactured with an integral vapor barrier may be in lieu of separate vapor barrier.

b. Only one type, as approved, shall be used whenever batt or blanket type is indicated and/or specified.

2. Batt or blanket insulating material such thickness that shall be installed to "C" factor of the overall insulation material is not greater value is the than 0.09 or the "R" not less than 11.11.

3. Vapor barrier if applied separately, shall be laid toward. the warm or heated room side of the ceiling or' wall surface. Vapor flow is to cold side.

4. The entire area to be insulated shall be enveloped with a continuous approved vapor seal applied separately or integrally. All obstructions and proj ections in the plane area to be insulated, shall have vapor barrier neatly fitted and taped thereto in a manner to exclude passage of vapor or warmed air into space above the barrier or to the cold side of the wall.

5. Insulating materials shall be installed close to walls of ceiling areas to be insulated with vapor barrier turned up on walls 6 in. plus or minus 1 in. and cemented to the wall with adhesive asphaltic mastic cement.

6. Batt or blanket insulation shall be neatly fitted about all hangers, fire breaks, etc., in the area to be insulated with all apertures and irregular spaces sealed with vapor barrier and loose fill mineral wool insulation to maintain full thickness of insulation.

7. Where vertical surfaces occur between insulated areas on the same level, it is NOT necessary to insulate the vertical surfaces except that:

   a. Where pipes and ductwork occurs, carry insulation over the pipes and ductwork where possible; otherwise, butt and seal to the ductwork or pipe.

   b. Extend insulation over top of all horizontal suspension system members, recessed lights.

C. Rigid Insulation:

1 Rigid insulation shall be installed to such thickness that, the overall "C" factor of the insulation material is not greater than 0.29 or the "R" valve is not less than 3.40.

2 Vertical insulation applied with adhesive sufficient to retain insulation in place during subsequent construction operations. Horizontal insulation laid in place, secured by approved means as required to maintain in position during subsequent construction operations.

3. Fitted with tight butt joints .with openings for penetrations neatly cut for tight fit.

4. Placed just prior to subsequent construction operations to prevent damage to insulation left exposed. Coordinate with backfilling and pouring of concrete to prevent damage during placement of fill and compaction or concrete against insulation.

5. See Section 3.2 for vapor barrier under concrete slab.

3.2 SAMPLES:

A. Batt or Blanket:

Submit duplicate samples of insulation material showing the applied vapor barrier and duplicate samples of vapor barrier material if proposed to be applied separately.

1. Insulation: 12 inches long by full thickness and width of batter blanket section.

2. Vapor Barrier: 12 x 12 inches.

B. Rigid: Submit duplicate samples of material of full thickness of material required.

1. Not less than full size board or block used.

3.3 EXTENT OF WORK:

A. Work shall include furnishing and installing incidentals usually considered necessary for a complete insulating job.

B. Shall be as set forth below and as indicated on the drawings.

1. Batt or blanket type insulation is required above all suspended ceilings where roof slab above is supported by structural steel beams or trusses or steal joists.

It is the intent that area between suspended ceiling and roof slabs be completely protected with an efficient vapor barrier and insulated to prevent heat loss through this area as specified in Par. 3 of this section.

2. Rigid perimeter insulation shall extend from bottom of floor line to 24 inches ,below exterior grade line unless shown otherwise.

C. Under other sections, requirements for work items listed below, if required, are set forth in the following sections:

	Section No.
EARTH WORK	02220
Concrete Work	03301
Masonry Work	04010

END OF SECTION

SECTION 11011- CASEWORK, CABINETS AND KITCHEN EQUIPLENT (Plastic Laminate)

PART 1 - GENERAL

PART 2 - RELATED DOCUMENTS

A. Drawings and general provisions of the Contract, including General and Supplementary Conditions and Division 01 Specification Sections, apply to this Section.

B. This section includes cabinets, tables, sinks, appliances, counters, work tops and equipment. See other sections for other cabinet and shelving work required.

C .. Because products of the several manufacturers of equipment vary in certain details, and because it is desired that items shall be each manufacturer's standard product to the greatest extent feasible, some items are identified by references to manufacturer's catalog numbers.

Such references are for general description and identification of acceptable materials, construction, types, sizes, arrangements, finishes, safety features, and performance standards. They shall not be construed as limiting, restricting or controlling selection of manufacturers.

Equipment details referred to in this section are for descriptive purposes and all dimensions are approximate. Manufactures' standard dimensions to the nearest inch are considered acceptable, subject to approval by the Contracting Officer.

Furnish filler pieces as shown or required to fill spaces between equipment and walls where equipment occurs next to walls.

D. To assure coordinated unit design, all items in each room or suite shall be products of one manufacturer to the greatest extent feasible.

E. All items shall be:

1. Latest design, first quality, rigidly constructed.
2. Complete in every respect, installed and connected to services and ready for operation.

F. Service connections will be provided under other sections.

1. Roughing-in shall be provided for hot and cold water.

2. Extensions, as ~equired to serve equipment, shall be in accordance with D.C. regulations covering plumbing and electrical work.

NOTE:

After completion of work, certificates of compliance shall be delivered to the Contracting Officer.

G. Piping and electrical materials generally similar to those set forth in sections pertaining to mechanical work. Valves shall be brass for all supply pipes with metal tags.

H. All installation work shall be:

1 Performed by properly trained, skilled mechanics, experienced in and equipped to render first class work in their respective trades.

2. In accordance with manufacturer's printed directions.

3. Securely anchored, rigid, true to line, plumb or level, square or curved, watertight and smoothly operating as each case may require.

2.01 MATERIALS:

A. Metals:

1 Stainless Steel - S.S.: Federal Specification QQ-S-766C, II Steel Plates, Sheet, and Strip-corrosion Resisting, IIClass 2, non-magnetic, Finish No.4 commercial polish.

a. Hardness - 74 to 89 on Rockwell B Scale.

b. Tensil Strength - 78,000 to 89,000 lbs. per square inch.

B Wood - air or kiln dried to moisture content not to exceed 8% at time of fabrication.

1. Hardwood, northern grown.

a. Clear and free from knots and blemishes.

b. Grain generally parallel to length of pieces.

c. Selected for grain and color.

2. Framing, stiles, rails, shelving, etc. - Birch (Yellow or Sweet), Oak, Sugar (hard) Maple, Elm, or Beech.

3. Unexposed members may be Oak.

C. Plastic Sheet, Laminated, Decorative - Federal Specification L-P-508H, Style D, Type I, Class 1.

D Plywood - bonded with highly water-resistive adhesive.

1. Douglas Fir shall conform to Commercial Standard CS45-47, 3 ply or proper grade for specific uses, ~ inch thick, except as otherwise required.

2. Hardwood shall conform to Commercial Standard CS35-47.

a. Veneers: Birch (yellow or sweet), Sugar (hard) Maple, Oak or Beech. Unexposed faces shall be 'sound-back" grade.

b. Cores and cross banding shall be Grade 2 of same species as in veneers.

c. Species elected to be used shall be used throughout job for exposed work.

E. Tempered Fiberboard - Federal Specification LLL-B-810B, "Building Board, (Hardboard) Hard Pressed, Vegetable Fiber," Type 1 .

3.1 CONSTRUCTION - FABRICATION:

A. Joints mortised and tenoned, thoroughly glued and reinforced with screws or bolts.

B. Base Cabinets:

1. Ends framed with not less than 3/4 x 1 1/2 inch stiles and rails, with 3/4 inch tenons pinned with 1/4 inch hardwood dowels.

2. Exposed ends - ~ inch plywood applied over stiles and rails - total thickness 1 1/2 inches.

3. Horizontal frames - top and bottom 3/4 inch thick stiles, rails and cross rails 1-3/4 inch wide,

4. Front frames - stiles, rails and crossrails 3/4 inch thick by 1 1/2 inches wide, solid wood.

5. Division frames - horizontal and vertical 3/4 inch thick, with 1/2 inch fir panels.

6. Shelves - hardwood 3/4 x 14 inches wide; each supported on four metal shelf supports. Provide rounded hardwood facing strip 3/4 x 3/4 inch minimum flued to front edge of shelves.

7. Removable flush and filler panels 3/4 inch plywood enclosing pipe spaces behind cabinets at exposed ends and fastened with screws.

8. Drawers:

a. Fronts 3/4 inch hardwood lipped and dovetailed to sides and bottom.

b. Backs fluid into sides.

c. Guides accurately aligned with proper clearances for smooth, easy operation.

d. Angle spring type stops attached to drawer backs to prevent inadvertent removal.

9. Doors shall be lipped, 3/4 inch, 5 ply hardwood plywood, or 3/4 inch thick solid ladder core banded on four sides.

C. Wall Cabinets:

1. Ends 1/2 inch plywood with integral front stiles 1-3/4 inch thick.

2. Backs and tops - plywood:

a. Backs shall be 1/4 inch thick plywood recessed into cabinet sides.

b. Top back rail 3 inches high, box type for full longitudinal support.

3. Front frames - stiles, rails and crossrails - 3/4 inch thick by 1-3/4 inches wide, solid wood.

4. Doors:

a. Flush type shall be same as for base cabinets.

5. Shelves:

a. Wood shelves - 3/4 inch plywood, Grade NN.

b. Adjustable on 1 inch centers, supported on four metal clips engaging perforated metal upright mortised into case ends and partitions.

c. Shelves over 48 inches long - provide additional formed metal shelf supports engaging metal uprights set into face back.

d. Provided rounded hardwood facing strip 3/4 x 3/4 inch minimum, glued to front edge of shelves.

D. Hardware - except as otherwise required - Brass or bronze , chrome-plated, US 26D.

1. Pulls for drawers and doors:

a. Solid semi-elliptic, streamlined, 3 inches x 1-1/8 inches.

b. Ends reinforced and tapped for 3/16 inch washer head machine screws.

2. Magnetic catches or self-closing hinges.

3. Hinges heavy duty chromium-plated steel with tight pins.

4 . Shelf supports - metal, adjustable, 1 inch o.c., for clips or brackets.

5. Shelf clips - steel, chrome-plated, US 26D. Those for supporting front edge of shelves shall have retaining pins to prevent forward shelf movement.

6. Drawer guides - Federal Specification FF-H-00111C, "Hardware Builders, Shelf and Miscellaneous."Type 1315, or similar type, as approved.

E. Worktops - plastic covered plywood or plastic covered particleboard.

1. Plywood - exterior grade 7 plies, 7/8 inch thick. Face veneers shall be species as set forth in Paragraph 2.D. Materials, of Douglas Fir.

2. Particleboard shall conform to Commercial Standard CS 236-61.

3. Plastic - phenolic sheet 1/16 inch thick:

a. Top sheet seamless; finish, color and design shall be as directed by the engineer

b. Bottom sheet plain.

c. Both sheets bonded to plywood in such manner as will assure against delamination, warp, ripple, or even wear due to grain of veneers.

d. Sink openings formed with rounded corners to fit contours of sinks, set in mastic to assure permanent waterproof seal.

e. Edges shall be self-edged.

f. Backsplash:

1. Plastic laminate backsplash shall be height shown on drawing, with self-edge to match countertop, for base cabinets only.

2. Plastic laminate to underside of wall cabinets where wall cabinets are specified.

F. Wood Shelving Assemblies:

1. Adjustable open hardwood shelving assembly. Sections and components interchangeable for various arrangements or extensions.

2. Uprights: End and intermediate panels shall be hardwood surfaced plyWood or particle board not less than one inch thick with hardwood facing strips on exposed edges.

a. End panels: flush smooth exposed surface recessed flush" with upright surface, full height of panel.

b. Intermediate panels: adjustable metal shelf supports recessed flush with surface, full height of panel on both sides.

c. Framing: Top and bottom framing between uprights solid hardwood not less than 3/4 inch 3 inches. Framing securely bolted to uprights.

3. Shelves: Shall be hardwood surfaced plywood or particle board not less than 3/4 inch thick with hardwood facing strips on exposed edges, unless noted otherwise.

a. Shelves shall not slide when place on metal shelf support, removable only by lifting.

b. Bottom shelf fixed above bottom framing.

c. Sloped shelves shall have raised front edge facing strip not less than 3/4 inch above shelf surface.

4. Tops:

   a. Tops for units 48 inches or less in height shall be not less than one inch thick solid hardwood or hardwood faced plywood, with hardwood facing strips on edges.

   b. Tops for units over 49 inches in height shall not be less than ~ inch thick solid hardwood or hardwood faced plywood, with hardwood facing strips on edges.

   c. Edges of tops shall finish flush with edges of uprights.

   d. Secure tops to framing and uprights with screws from the underside and concealed behind framing face.

5. Backs: Matching hardwood plywood not less than 3/16 inch thick. Backs required only when noted or specified.

6. Shelf dividers: Shelves shall have dividers where required, full depth of shelf and not less than 7 inches high and 3/4 inch thick.

4.1 **EQUIPMENT:**

A. Garbage Disposer: Unless otherwise noted, garbage Disposer shall conform to Federal Specification OO-G-1513B, "Garbage Disposers, Household," Type I - Continuous Feed, Size 1 – 1/4 Horsepower.

1. Manufacturer's stock design, suitable for continuous operation on 115 volts. Single phase electric service with a manual reset (overload) protection built into ½ horsepower motor.

2. Equipped with 1~ inch cast brass body "P" trap with cleanout and I.P.S. nipple to wall with cast escutcheon.

3. Capacity approximately 2 quarts.

B. Single Bowl Sink:

   1, Single compartment of stainless steel not less than 18 gauge.

   2. Flanged for building into work tops.

   3. Fitted with renewable seat combination faucet through ledge at back of sink compartment.

END OF SECTION

BUILD OUT OF TIRE SHOP AND ADMINISTRATIVE OFFICES

SECTION 07200 – ROOF WALKWAY PAVERS

PART 1 - GENERAL

1.1 RELATED DOCUMENTS

A. Drawings and general provisions of the Contract, including General and Supplementary Conditions and other Division 1 Specification Sections, apply to this Section.

1.2 DESCRIPTION OF WORK:

A. Documents referred to in Paragraph 1 SCOPE of SPECIAL CONDITIONS, are part hereof, the same as if repeated herein.

B. Work under this section includes the preparation of surfaces and installation of roof walkway payers.

PART 2 - PRODUCTS

2.0]. MATERIALS: Shall conform to the following:

A. Payers shall be butyl rubber, neoprene or virgin vinyl meeting or exceeding the following requirements:

REQUIREMENTS	BUTYL	NEOPRENE	VINYL
1. Color	Black	Black	Black
2. Thickness	3/4"	3/4"	3/4"

B. Adhesive shall be as recommended by the manufacturer of the panels. It shall remain elastic at temperatures above minus 401°F and shall be compatible with the panel material and with the materials to which it is bonded.

PART 3 - EXECUTION

3.01 PREPARATIONS:

A. Preparation of surfaces to receive panels is specified elsewhere.

B. surfaces shall be smooth, firm, dry and clean.

C. Remove all dirt, dust and loose material, oil or other material which would interfere with adhesion of panels.

3.02 APPLICATION:

A. Apply adhesive as recommended by the panel manufacturer on surfaces that will receive panels. Allow adhesive to dry until it does not stick to a dry finger touch or becomes tacky as applicable.

B. Press firmly and uniformly in place against the previously applied adhesive. Position each panel between panels.

3.03 SUBMITTALS:

A. Contractor shall submit a notarized certification from the membrane manufacturer that all materials to be furnished for this project meet or exceed the specification requirements.

B. Submit in quintuplicate the manufacturers recommendations for installation of the panels with details of placements around projections, corner fabrication and other pertinent details.

3.04 EXTENT OF WORK:

A. See drawings for extent and installation details.

B. Under this section, furnish and install everything usually considered necessary for a complete job and ordinarily provided whether or not actually mentioned.

C. Roof walkway panels, shall be carey-tred non-skid walkway panels as manufactured by the Celotex Corporation, or approved equal.

END OF SECTION

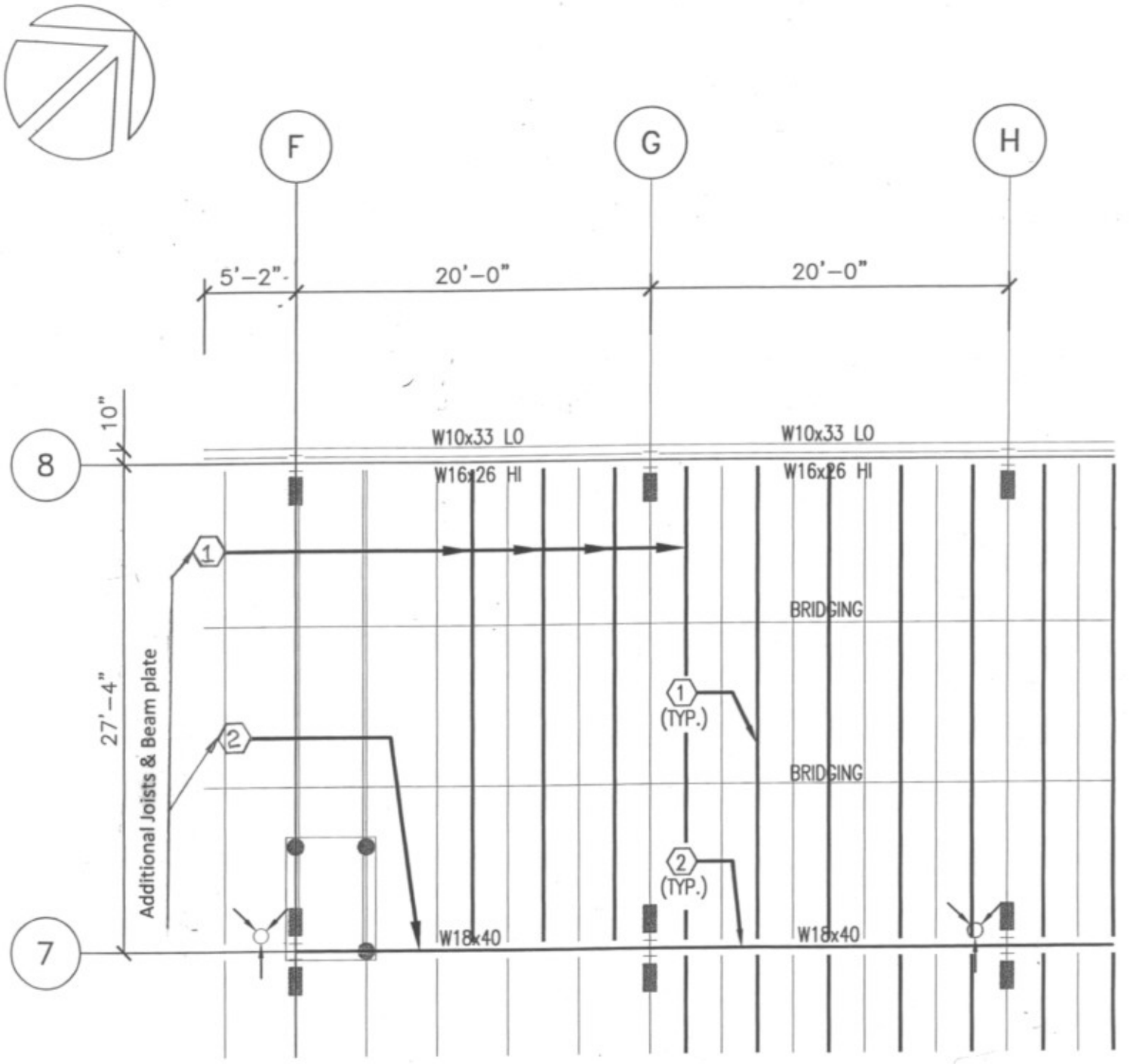
F
G
H
5'-2"
20'-0"
20'-0"
10"
8
7
27'-4"
W10x33 LO
W10x33 LO
W16x26 HI
W16x26 HI
1
2
BRIDGING
BRIDGING
1
(TYP.)
2
(TYP.)
Additional Joists & Beam plate
W18x40
W18x40

RECESSED TOILET-SEAT-COVER DISPENSER

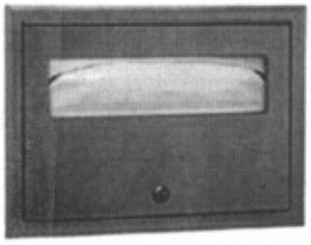

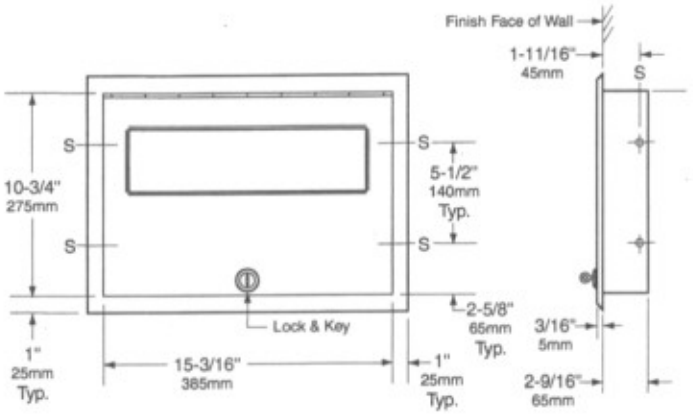

MATERIALS:

Cabinet — 18-8 S, type-304, heavy-gauge stainless steel. All-welded construction.

Flange — 18-8 S, type-304, 22-gauge (0.8mm) stainless steel with satin finish. Drawn and beveled, one-piece, seamless construction.

Door — 18-8 S, type-304, 22-gauge (0.8mm) stainless steel with satin finish. Secured to cabinet with a full-length, stainless steel piano-hinge. Beveled opening. Equipped with a tumbler lock key

OPERATION:

Dispenses single- or half-fold paper toilet seat covers. To fill dispenser, door unlocks with key provided. Capacity: 500 toilet seat covers.

INSTALLATION:

Provide framed rough wall opening 15-5/8" wide x 11-1/4" high (395 x 285mm). Minimum recessed depth required from finish face of wall is 2-5/8" (67mm). Allow clearance for construction features that may protrude into rough wall opening from opposite wall. Coordinate with mechanical engineer to avoid pipes, vents, and conduits in wall. Mount cabinet with shims between framing and cabinet at all points indicated by an *S*, then secure unit with four #8 x 1-1/4" (4.2 x 32mm) sheet-metal screws (not furnished).

SHT 3 OF 5

Restroom Partitions & ADA Compliance

The following information is provided as a summary of currently available data in the industry. It is *NOT* intended to be an interpretation of ADAAG, rather a reference for further research.

Reference Sources

- The American with Disabilities Act (ADA)
- ADA-ABA Accessibility Guidelines for Buildings and Facilities
- ANSI A117.1 – American National Standard for Buildings and Facilities
- UFAS – Uniform Federal Accessibility Standards

In order to make the ADAAG enforceable, these Guidelines were subsequently amended and adopted by the U.S. Department of Justice as the ADA Standards for Accessible Design (the *Standards*). Copies of the most updated Standards can be obtained from the Department of Justice and the Access Board in Washington, DC. The law applies to most buildings and facility types nationwide regardless of state or local requirements, but it is not a building code in and of itself.

Authority has been left with each state and local government to adopt and enforce its own building codes, but the office of the U.S. Assistant Attorney General for Civil Rights has the authority under the ADA to certify that a state or local building code meets or exceeds the minimum requirements of ADA, and such certificate of equivalency can be used as rebuttal evidence in any subsequent litigation. To help everyone with legal compliance, the federal government has established Disability and Business Technical Assistance Centers (DBTAC) in each region of the country to provide information and advice on the ADA, including ADAAG requirements.

All building plans should be confirmed with local jurisdictions to ensure job compliance.

ADA Title III requires that all new construction of public accommodations and commercial facilities meet or exceed ADAAG specifications. All additions, and substantial alterations to functional spaces in existing public accommodations and commercial facilities are considered new construction and subject to the same ADAAG requirements.

General Information

Doors

All interior doors (including toilet partition doors) must push or pull open with a maximum of five pounds of force. Door handles, pulls, latches, locks, and other opening devices should have a shape that is easy to operate with one hand, without tight grasping, pinching or twisting of the wrist; and they should be mounted no higher than 48" above the finish floor.

Toilets

"Undercut" bowls are preferred. The height of the toilet seat is perhaps the most critical factor. The height of toilet seats must be 17" to 19" above the finish floor. Moderate heights of 17" to 18" work well in standard compartments, while heights of 18" to 19" work best in the 36" wide walk-in compartments.

Grab Bars

All must have a diameter of 1¼" to 1½". Required mounting heights are 33" to 36" from the centerline of the grab bar to the finish floor. The structural strength of all grab bars and their mounting devices must withstand more than 250 lbf.

Standard compartments require one grab bar at least 40" long to be mounted on the side wall or partition nearest the toilet, no more than 12" from the back wall. A second grab bar at least 36" long must be mounted on the back wall, no more than 6" from the side wall or partition nearest the toilet.

Note: Local municipalities may have additional grab bar requirements.

Toe clearance at least 9" above the finish floor is required under the front partition and one side partition of all accessible compartments. Toe clearance is not required if the depth of the compartment is greater than 60".

Toilet Compartments

Standard Compartment (Wheelchair Accessible)

Required for all new construction and alterations with an outswinging door no more than 4" from the corner diagonally from the toilet. The toilet must be offset on the back wall with its centerline 18" from the nearest side wall or partition. Horizontal grab bars must be mounted behind the toilet and on the nearest side wall or partition. Refer to the illustration on page 2 for dimensions and more detailed information.

Stall Width

60" Minimum (Inside Clear)

Stall Depth

56" Minimum (Inside Clear) with wall-mounted toilets

59" Minimum (Inside Clear) with floor-mounted toilets

Standard Walk-In (36" Wide) Compartment

Ambulatory-accessible compartment with an outswinging door for washrooms with six or more toilets. The toilet must be centered on the back wall. Horizontal grab bars must be mounted on each side wall or partition. Refer to the illustration on page 2 for dimensions and more detailed information.

Note: Has unspecified clear opening for door size.

Stall Width

36" Minimum & Maximum (Inside Clear)

Stall Depth

Unspecified, can be same depth as adjoining stalls.

60" Minimum (Inside Clear) required by CABO/ANSI 92

Restroom Partitions & ADA Compliance

Standard Compartment (Wheelchair Accessible)

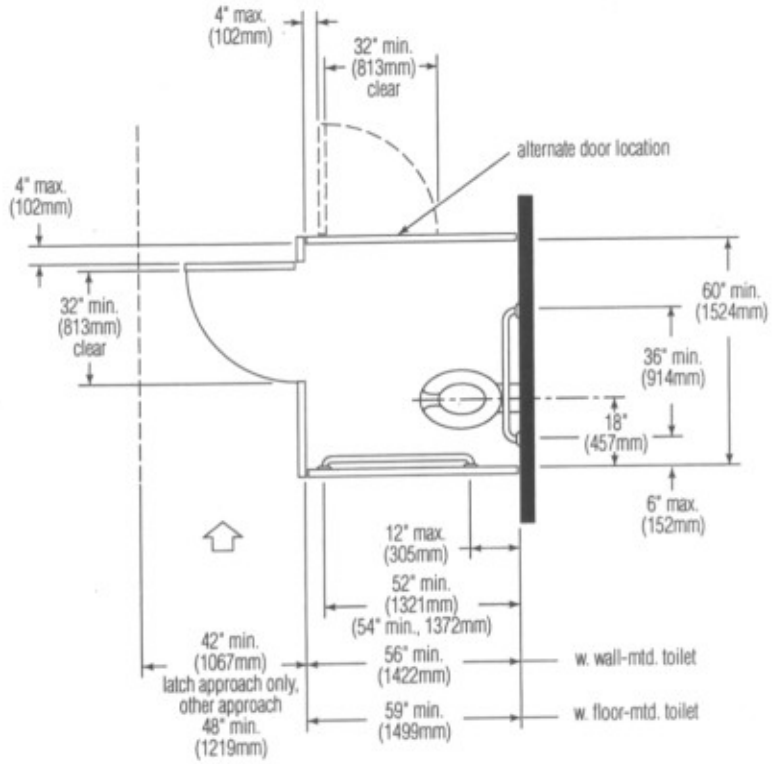

Standard Walk-In (36") Wide Compartment

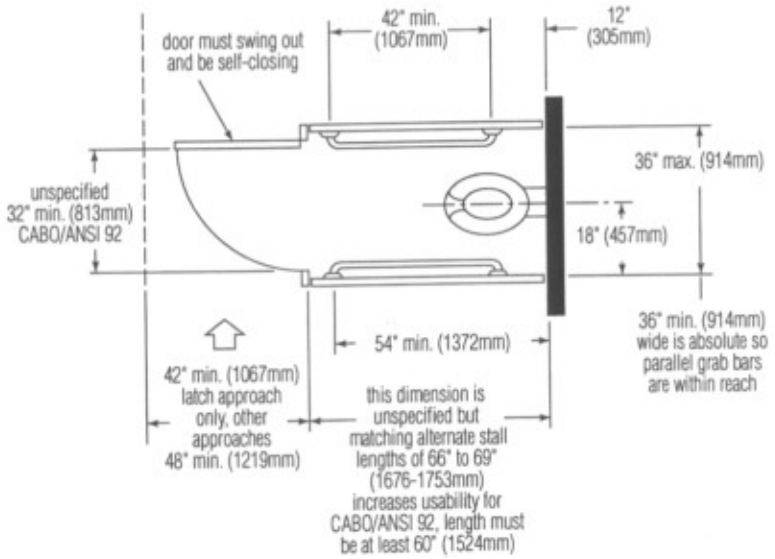

Toilet Grab Bar Installation Instructions:

Side Wall - As illustrated below, the side wall grab bar must be a minimum of 42 inches long, and located a maximum of 12 inches from the rear wall. It must also extend a minimum of 54 inches from the rear wall. The bar should be mounted 33-36 inches from the floor.

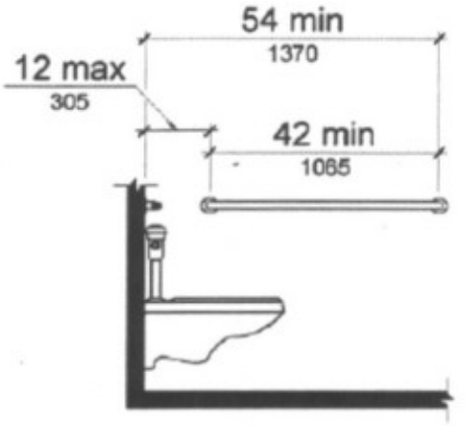

Rear Wall - As illustrated below, the rear wall grab bar must be a minimum of 36 inches long and extend from the centerline of the toilet a minimum of 12 inches on one side and 24 inches on the other side. The bar should be mounted 33-36 inches from the floor.

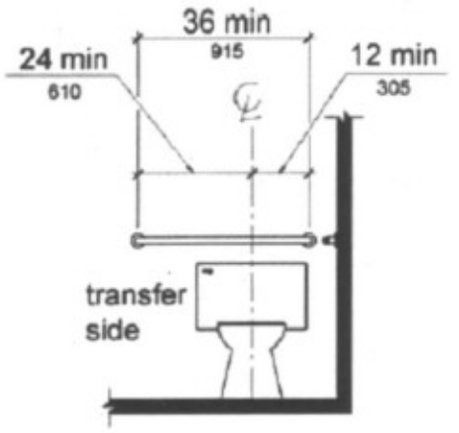

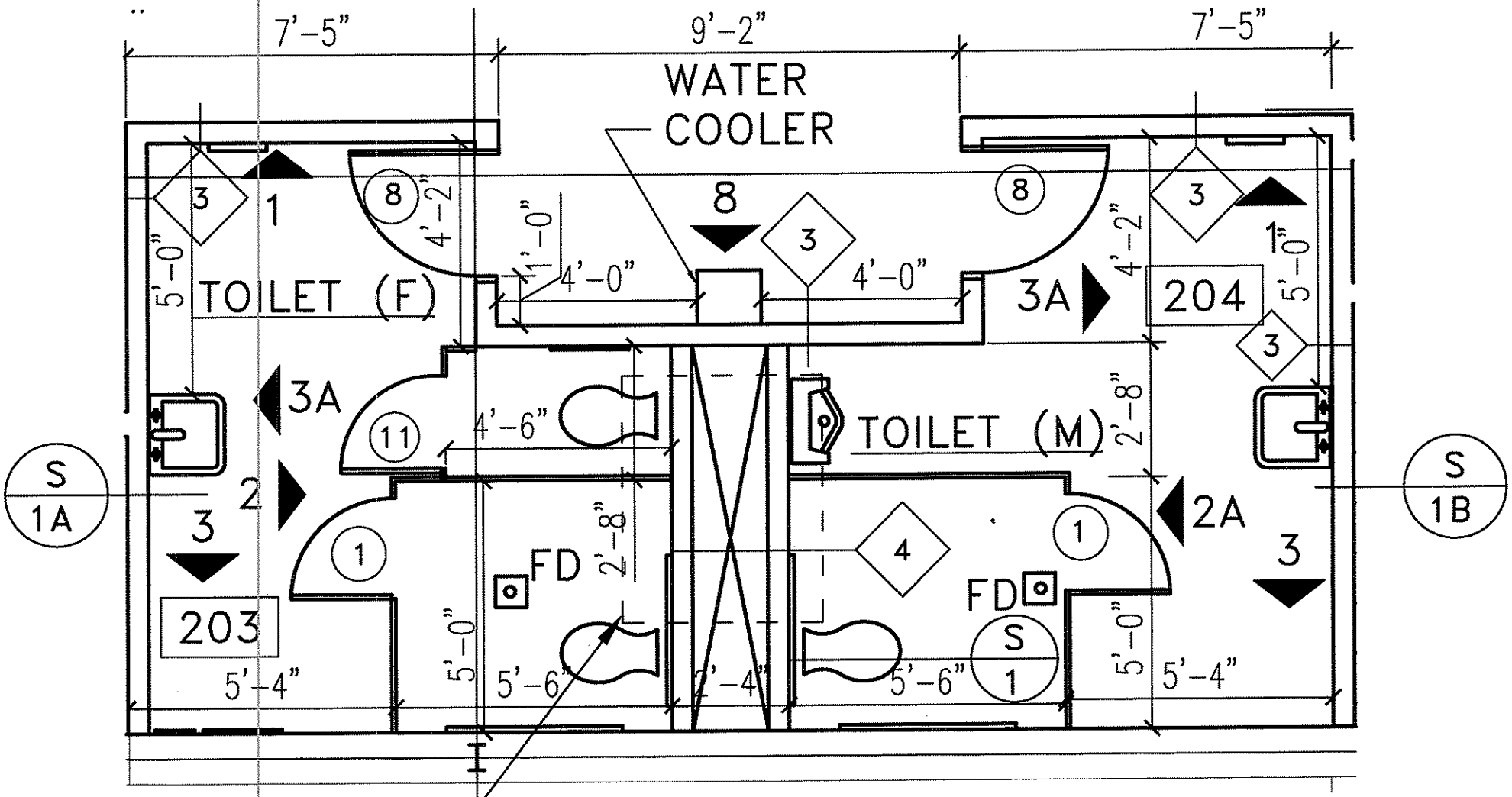

LAYOUT-1ST & 2ND FLOOR TOILET PLAN

SCALE: N.T.S

3 of 10

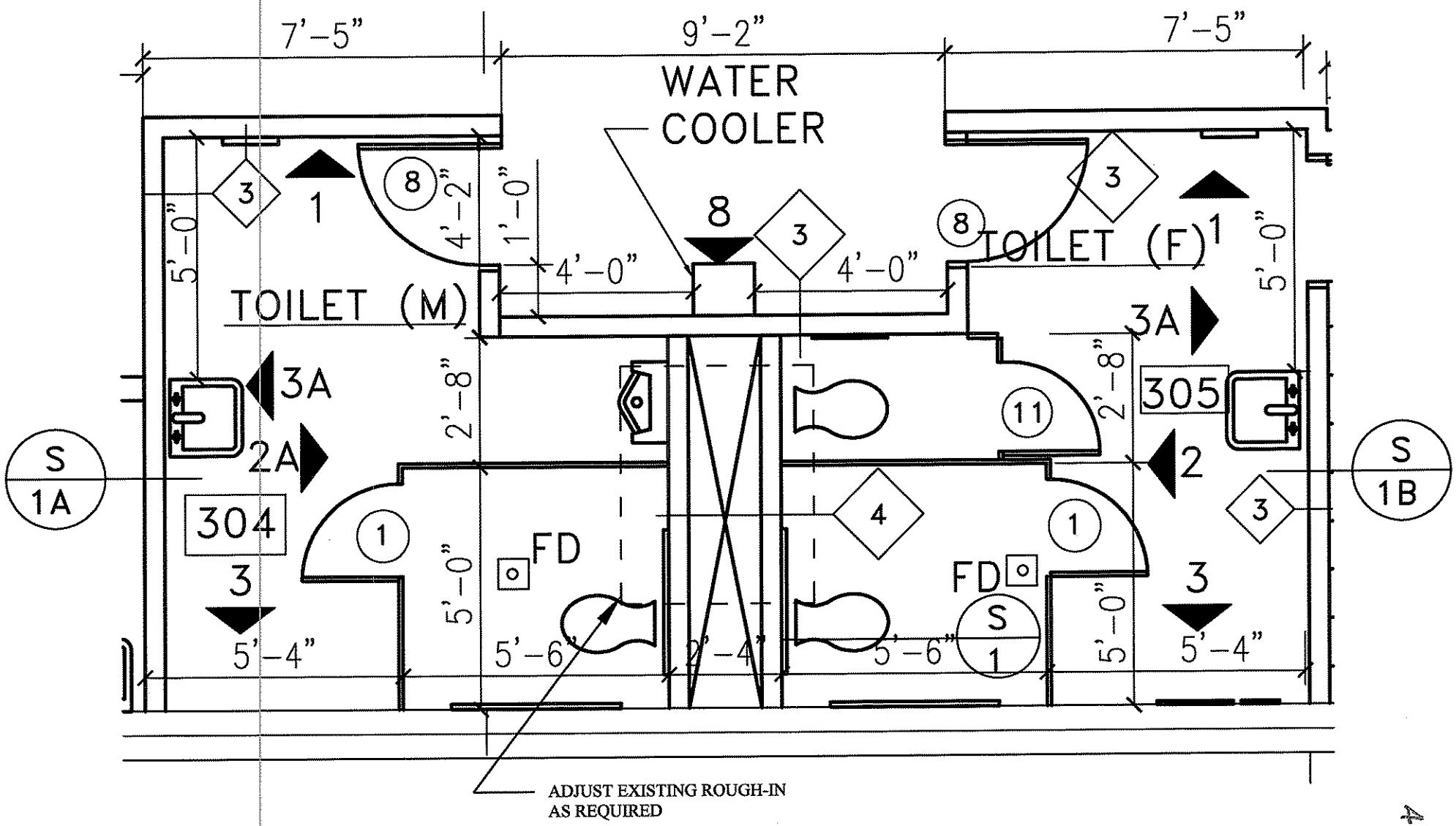

LAYOUT 3RD FLOOR TOILET PLAN

SCALE: N.T.S

4 of 10

#5 of 10

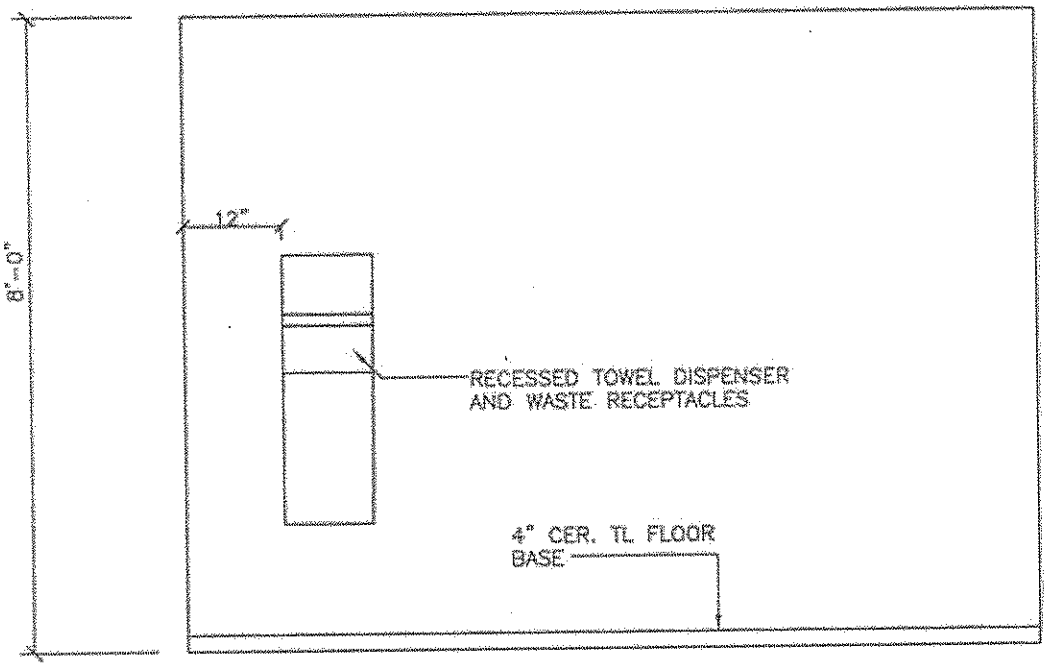

1 — INTERIOR ELEVATION (MALE & FEMALE TOILETS)

SCALE: N.T.S

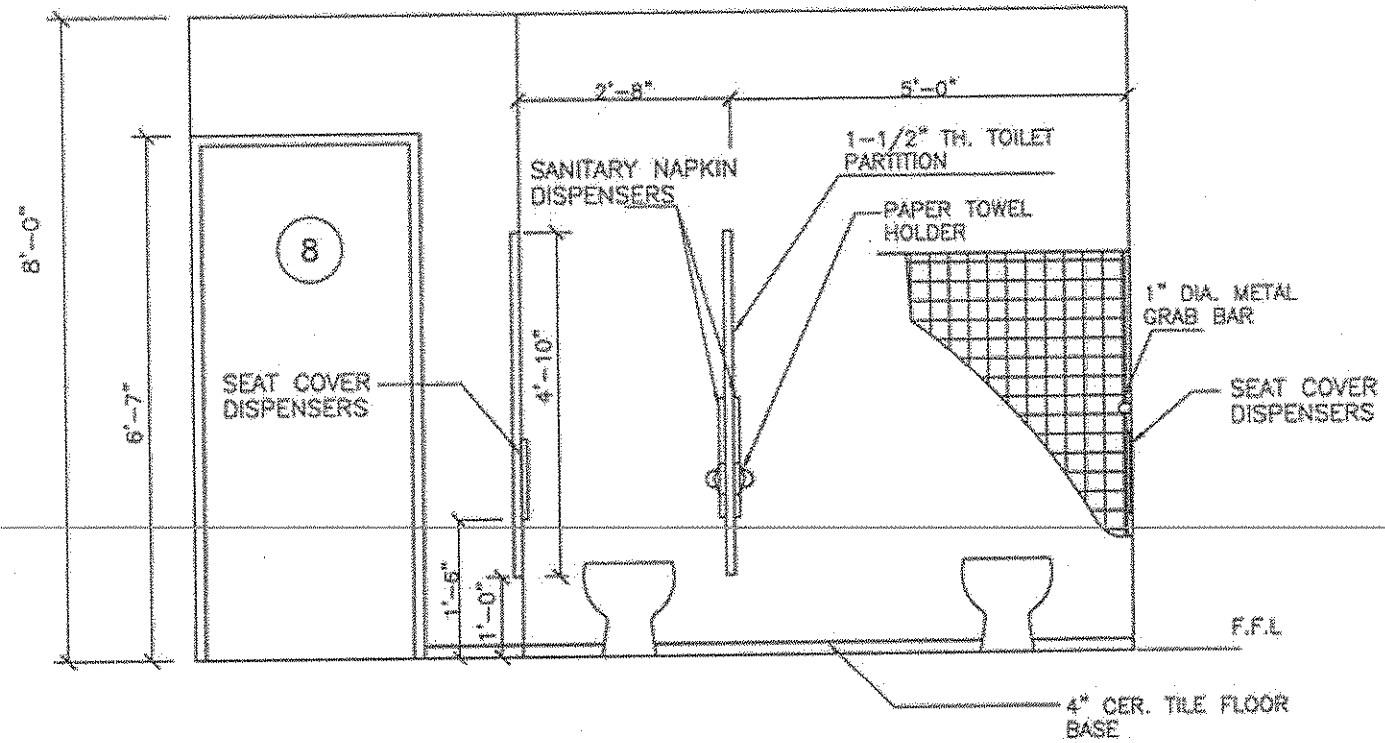

2 INTERIOR ELEVATION (FEMALE TOILETS)

SCALE: N.T.S

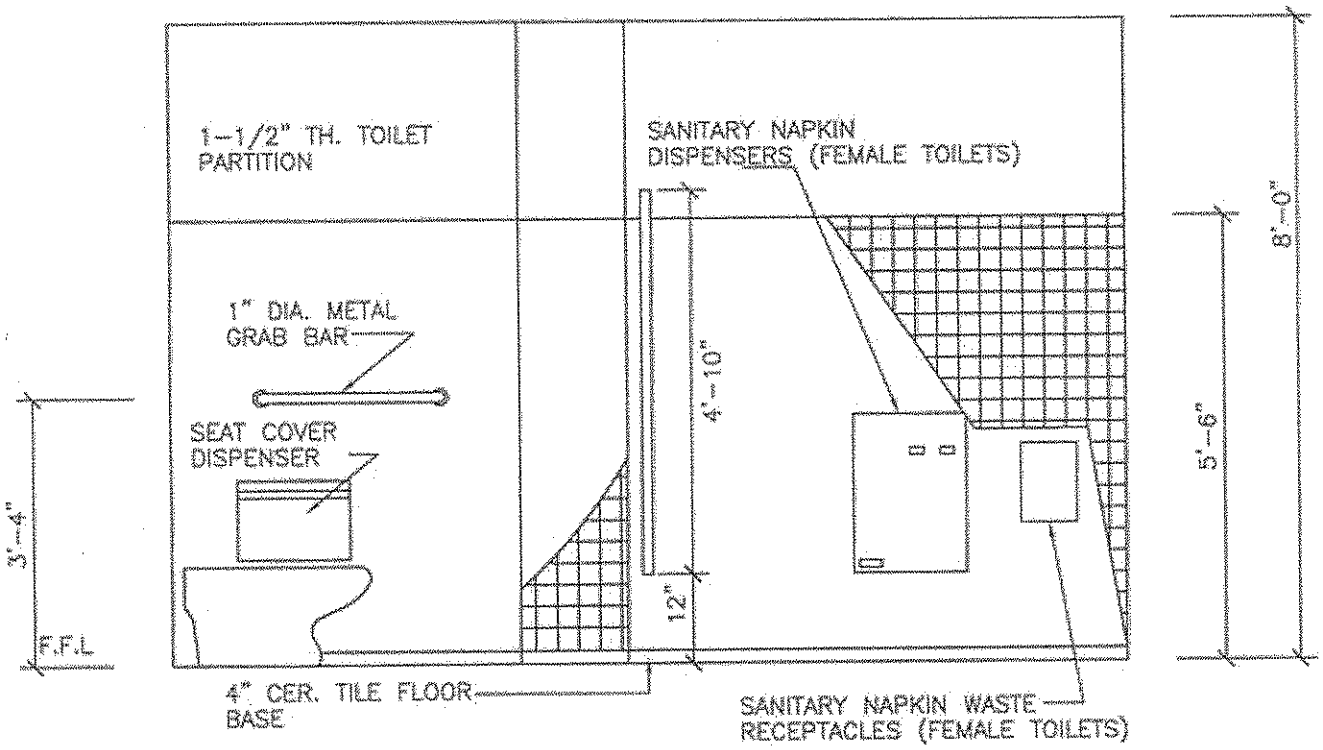

3 – INTERIOR ELEVATION (MALE & FEMALE TOILETS)

SCALE: N.T.S

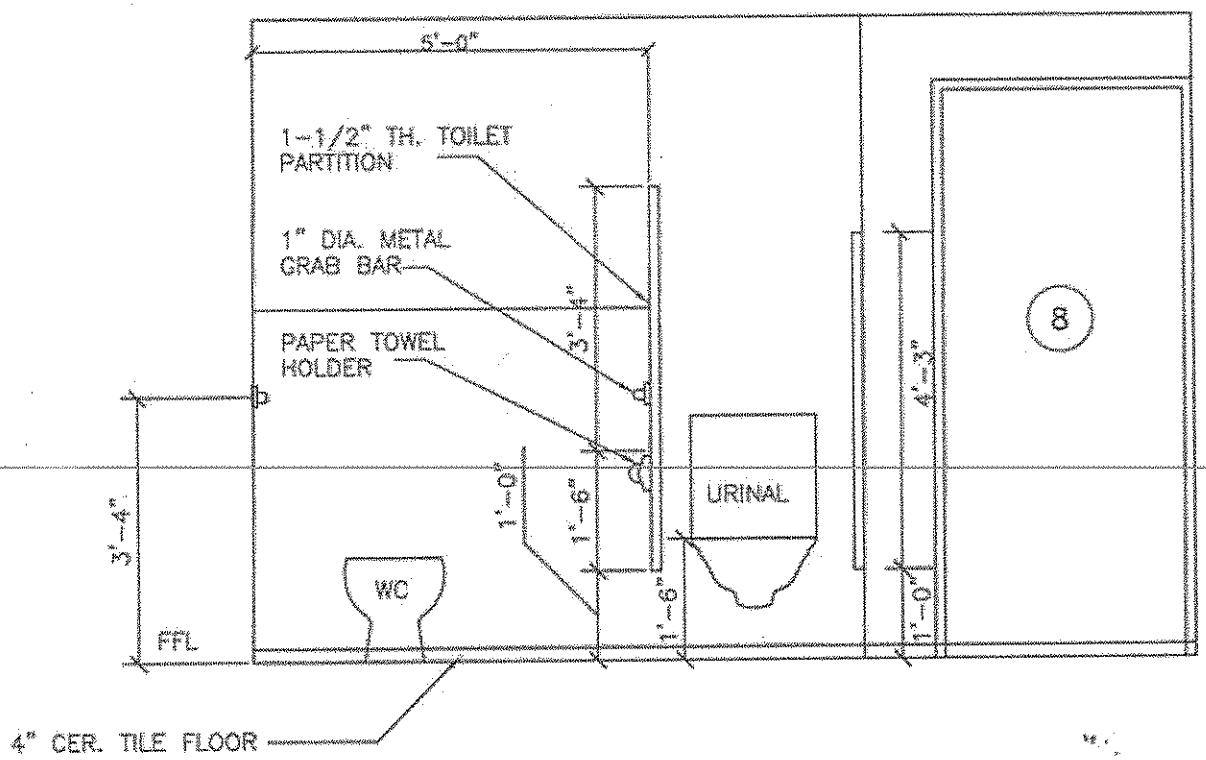

2A – INTERIOR ELEVATION (MALE TOILETS)

SCALE: N.T.S

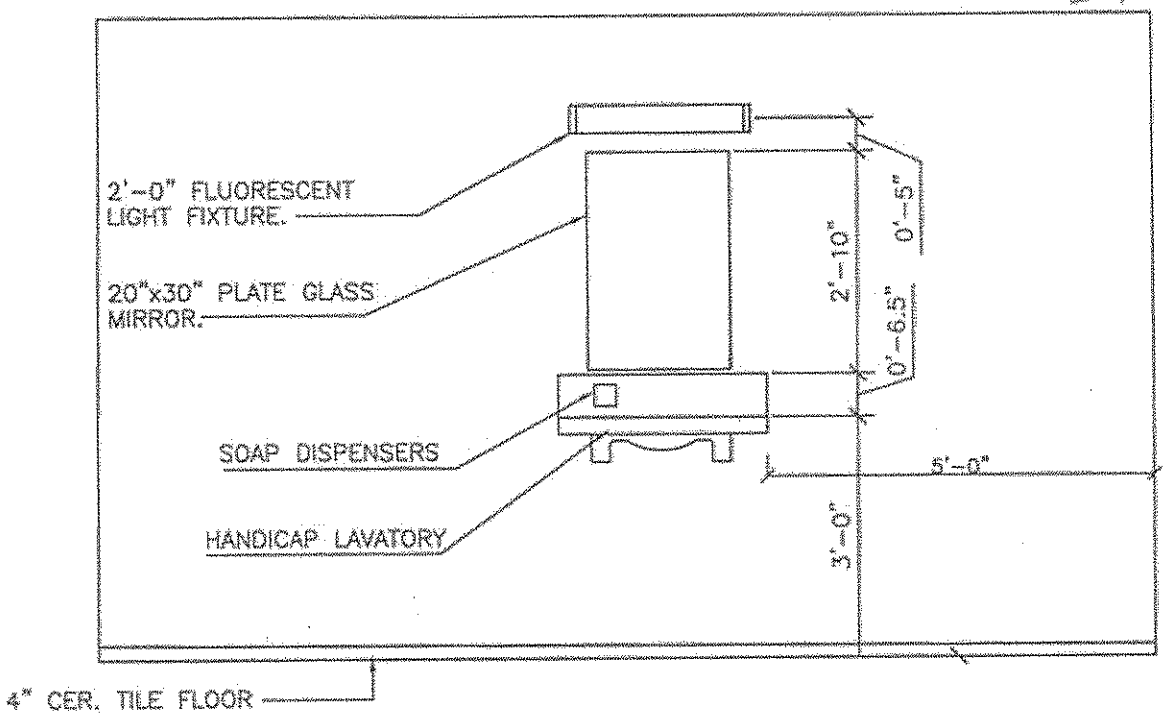

3A – INTERIOR ELEVATION

SCALE: N.T.S

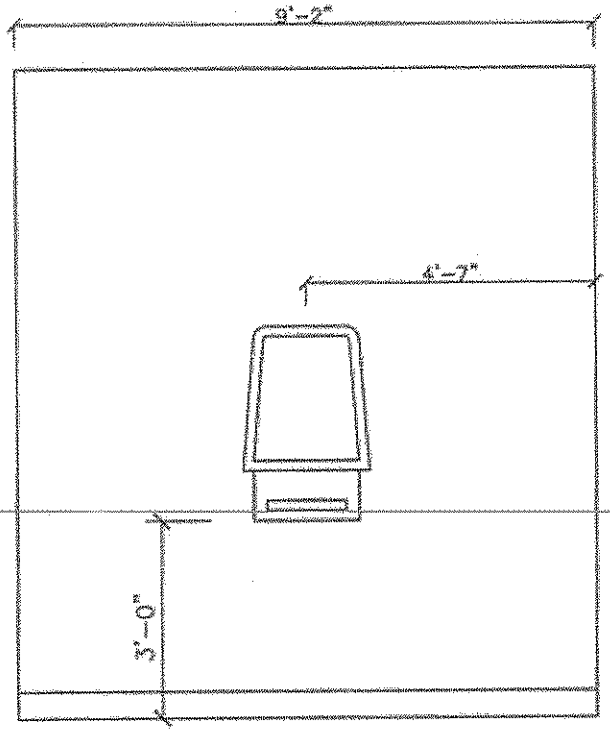

8 – WATER COOLER ELEVATION

SCALE: N.T.S

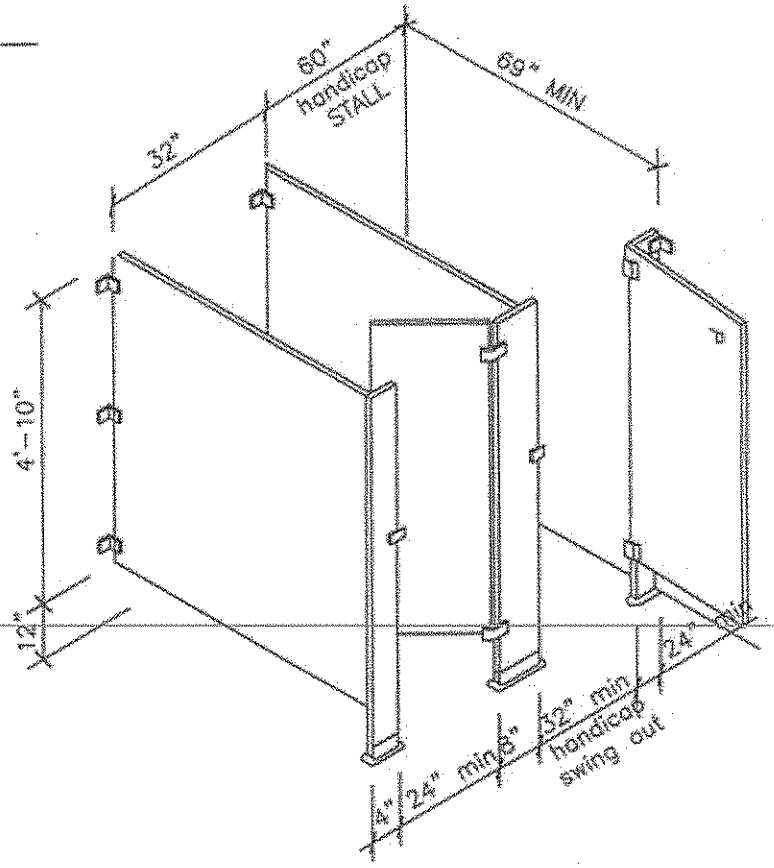

TYPICAL TOILET PARTITIONS

NOT TO SCALE

S/1A S/1B

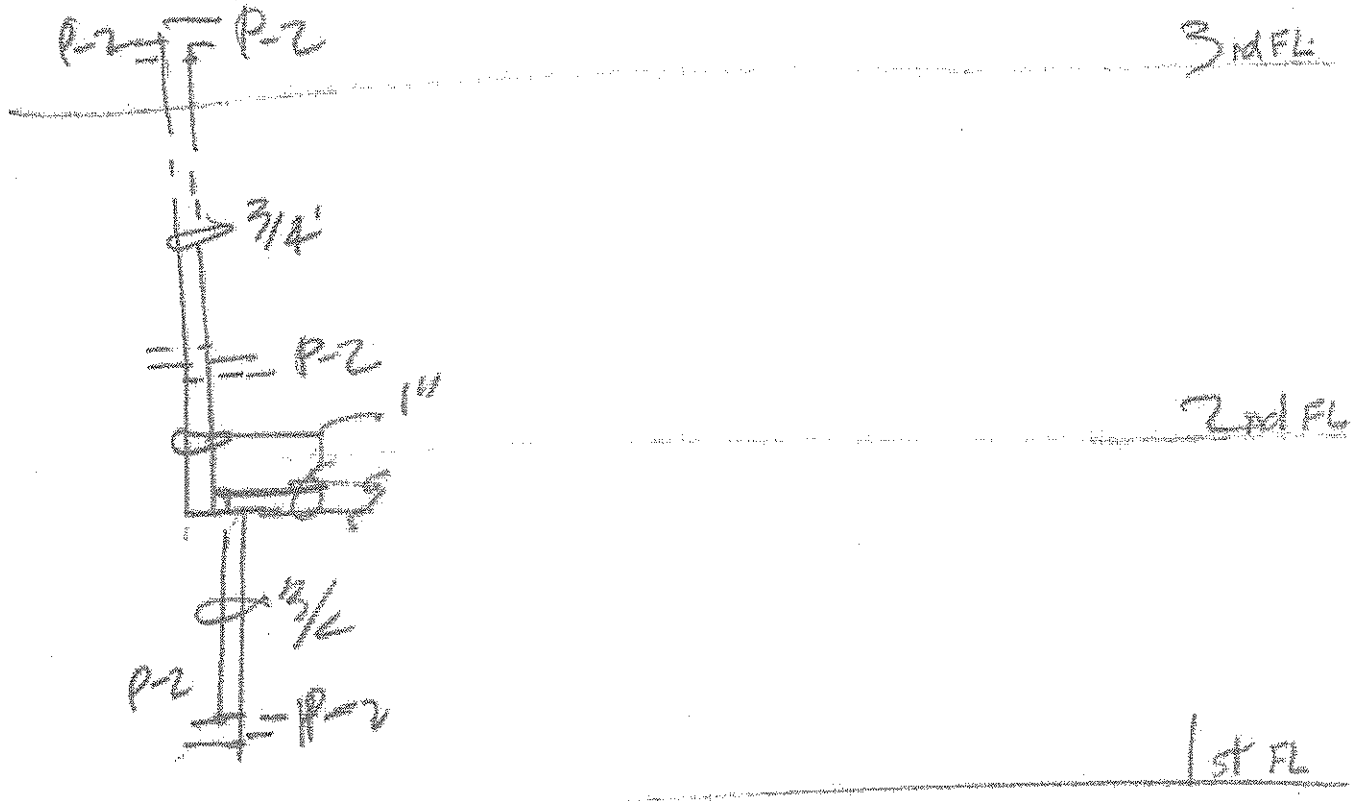

WATER PRESSURE DIAGRAM

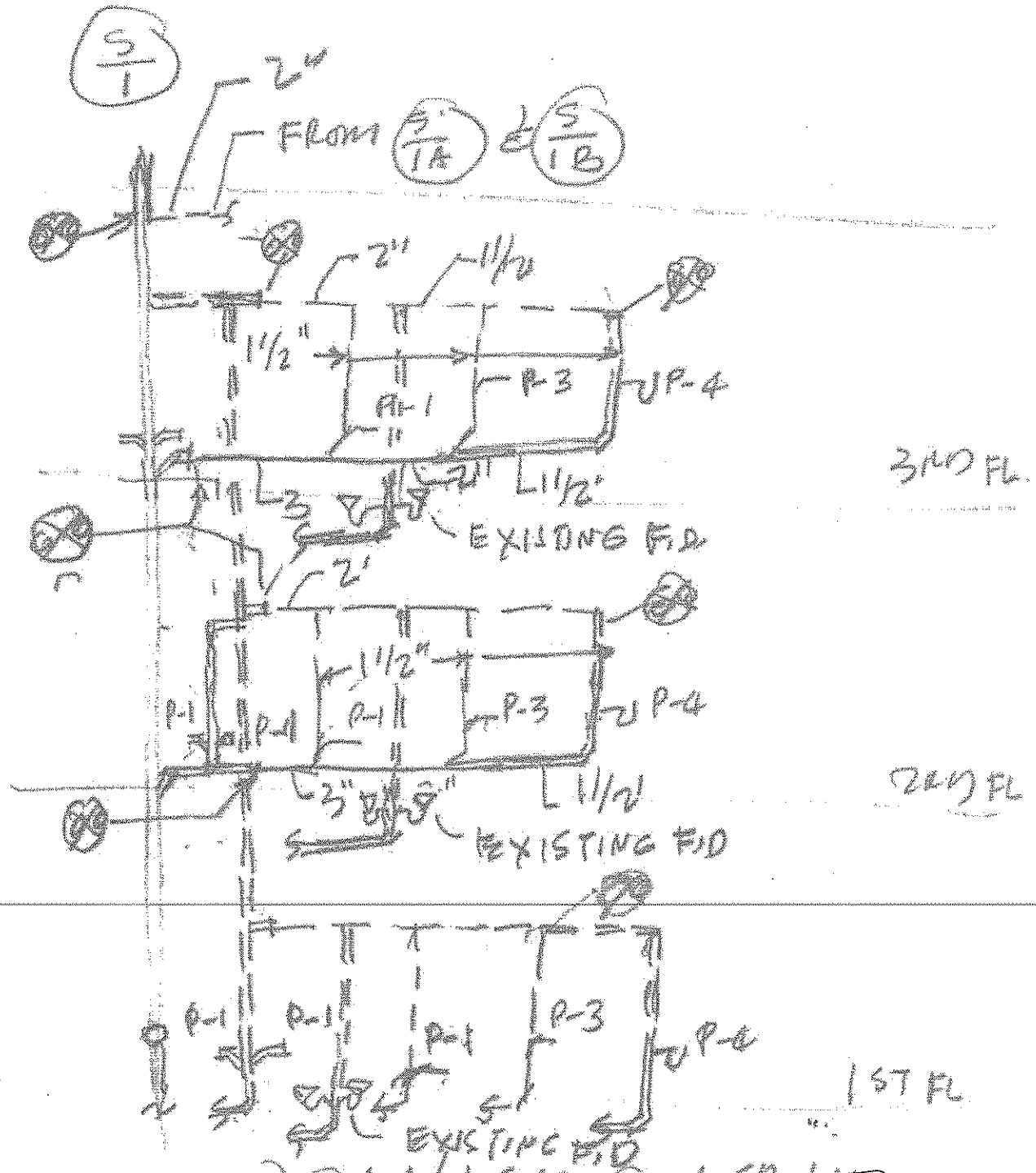

DRAINAGE DIAGRAM

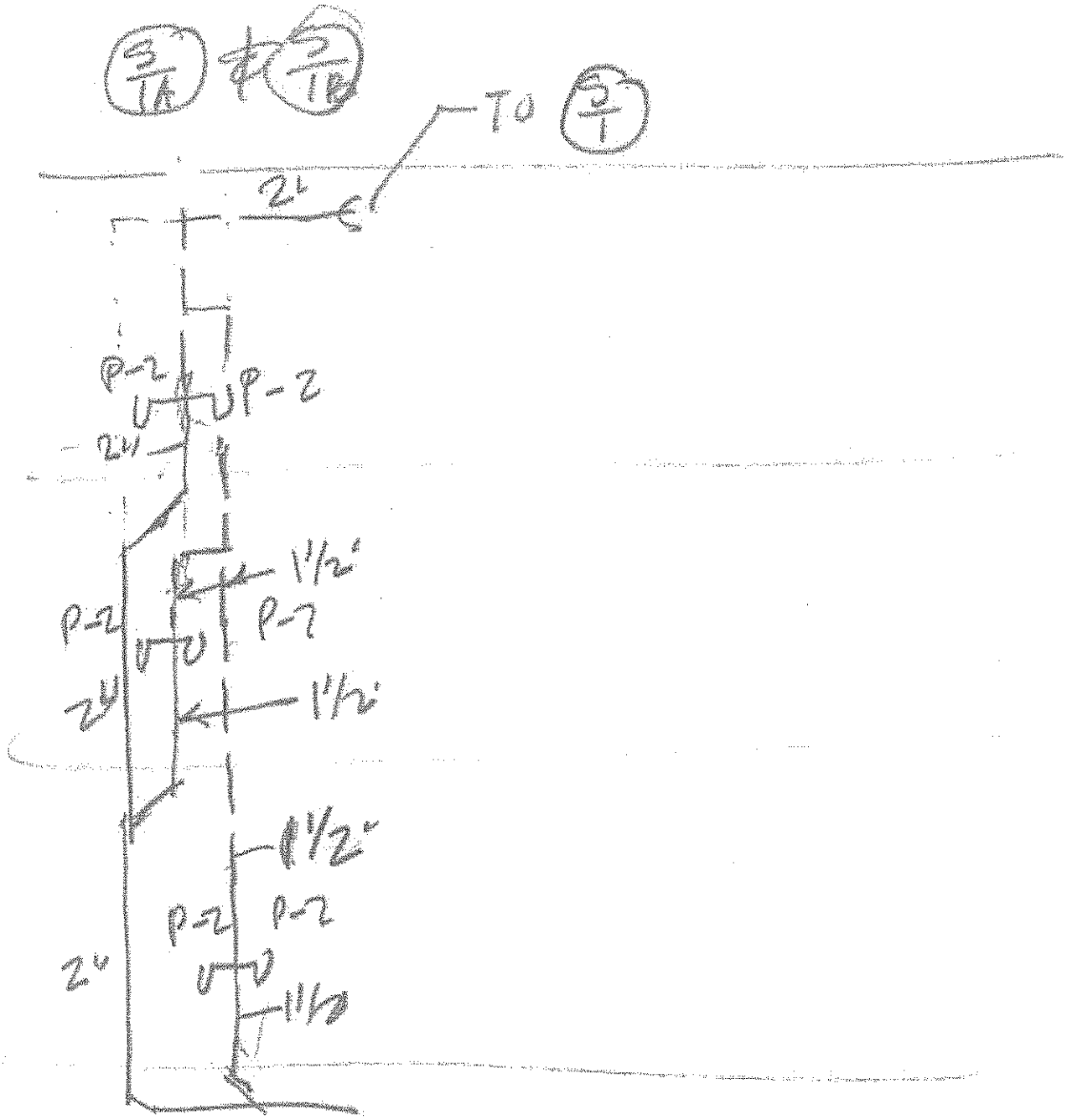

DRAINAGE DIAGRAM

SIGN TYPE 2

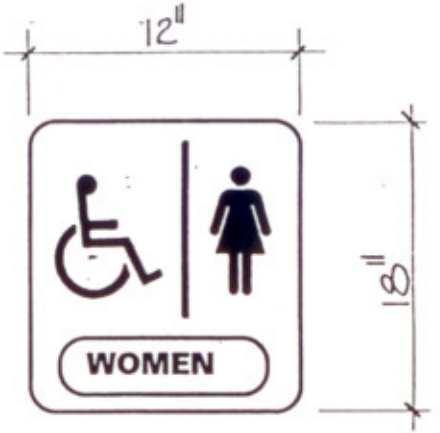

SIGN TYPE 2

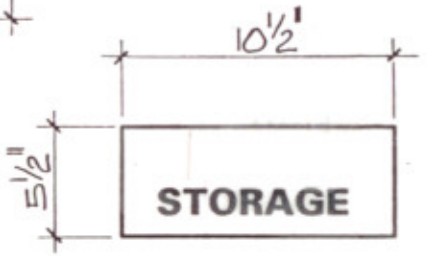

SIGN TYPE 3

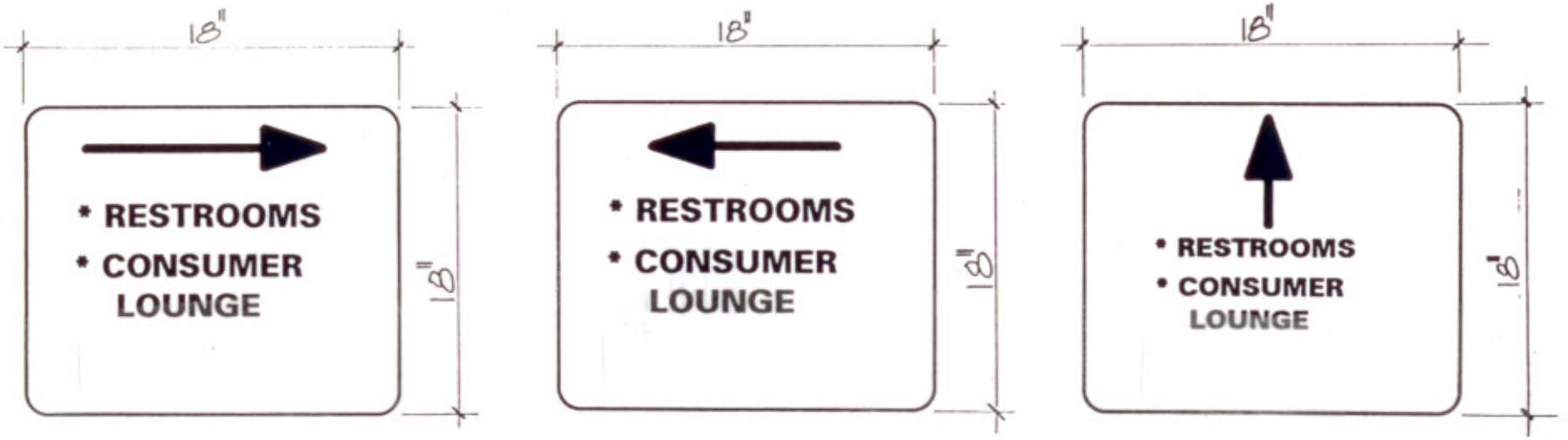

SIGN TYPE 1

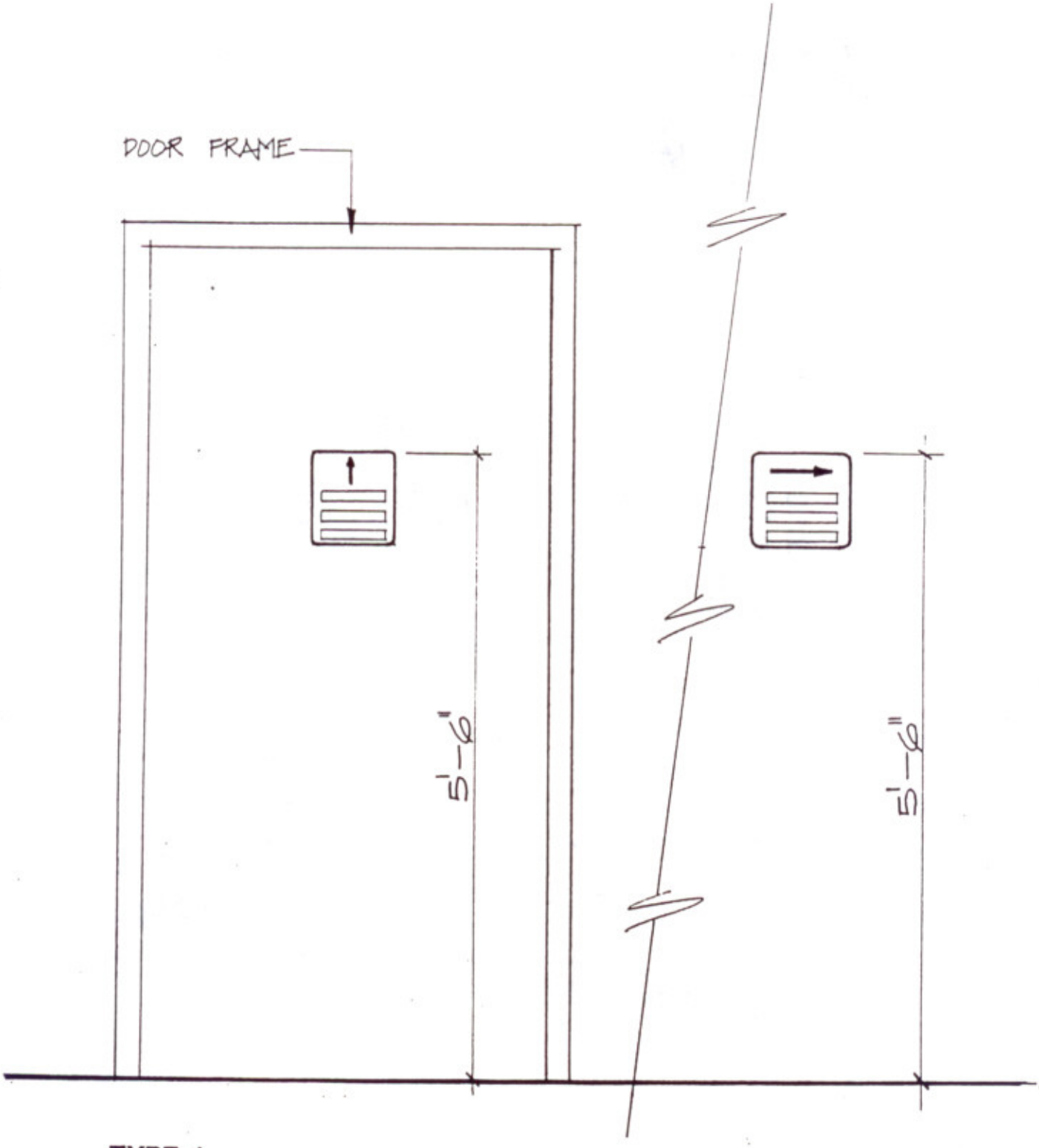

TYPE 1

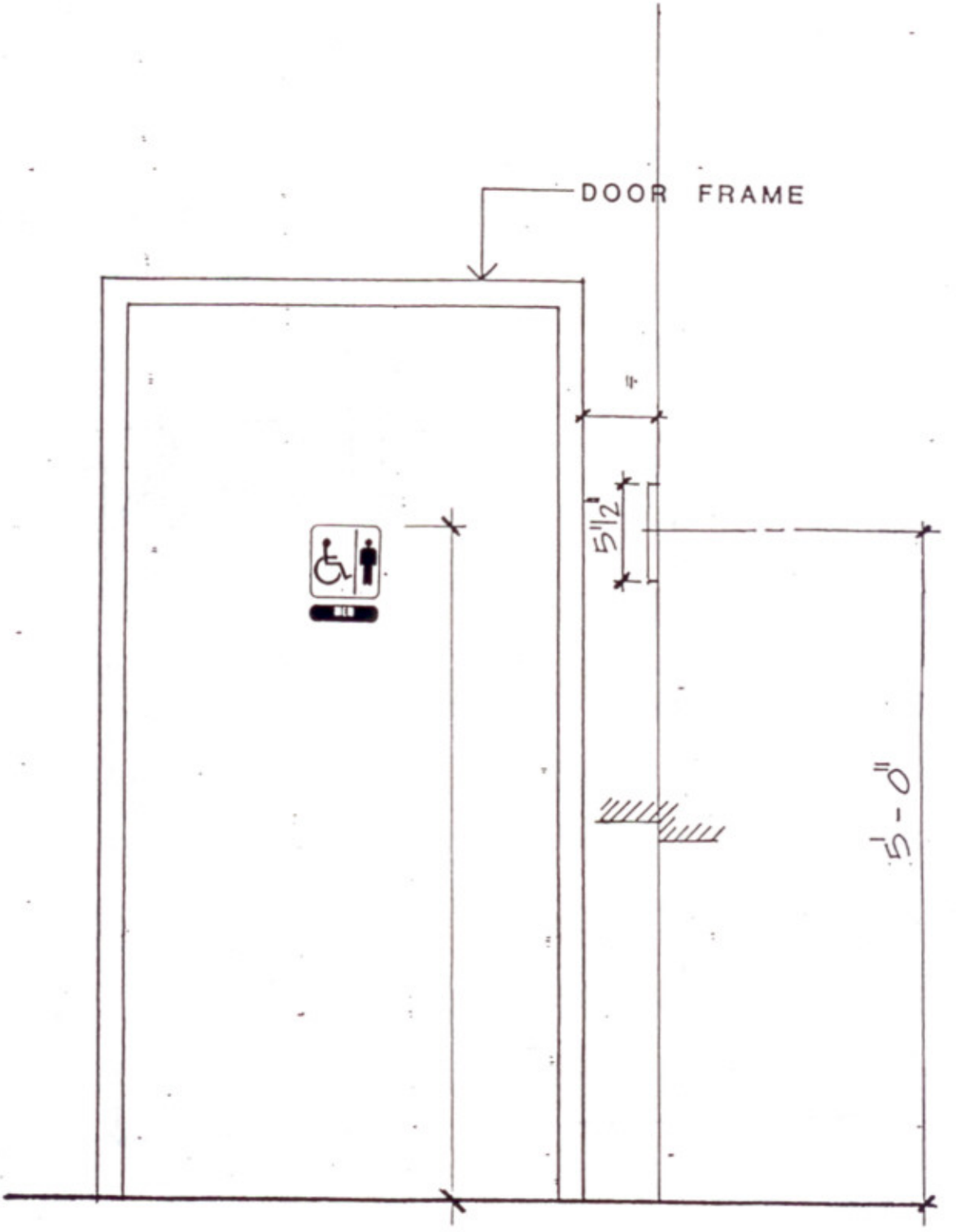

TYPE 2

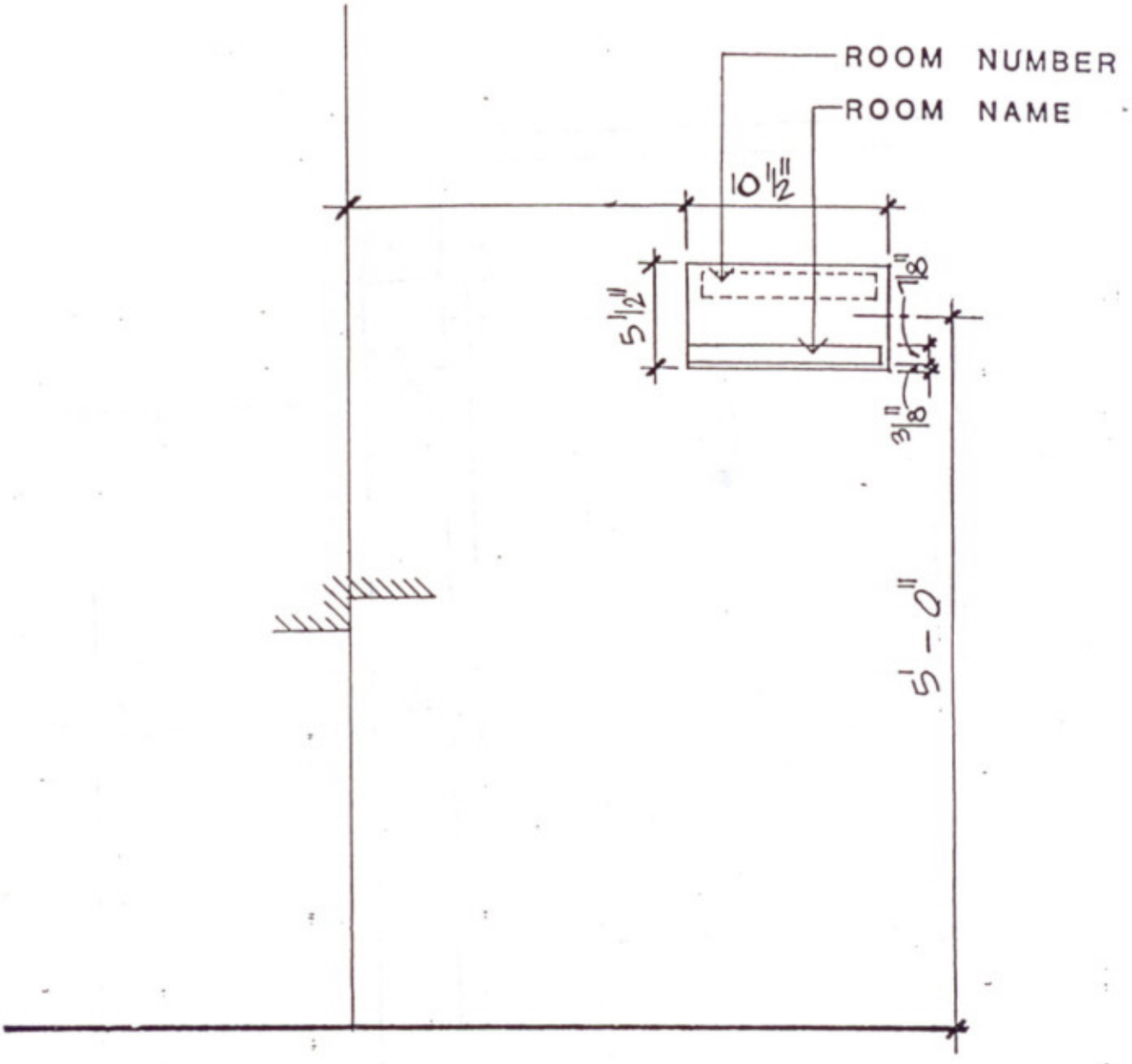

TYPE. 3

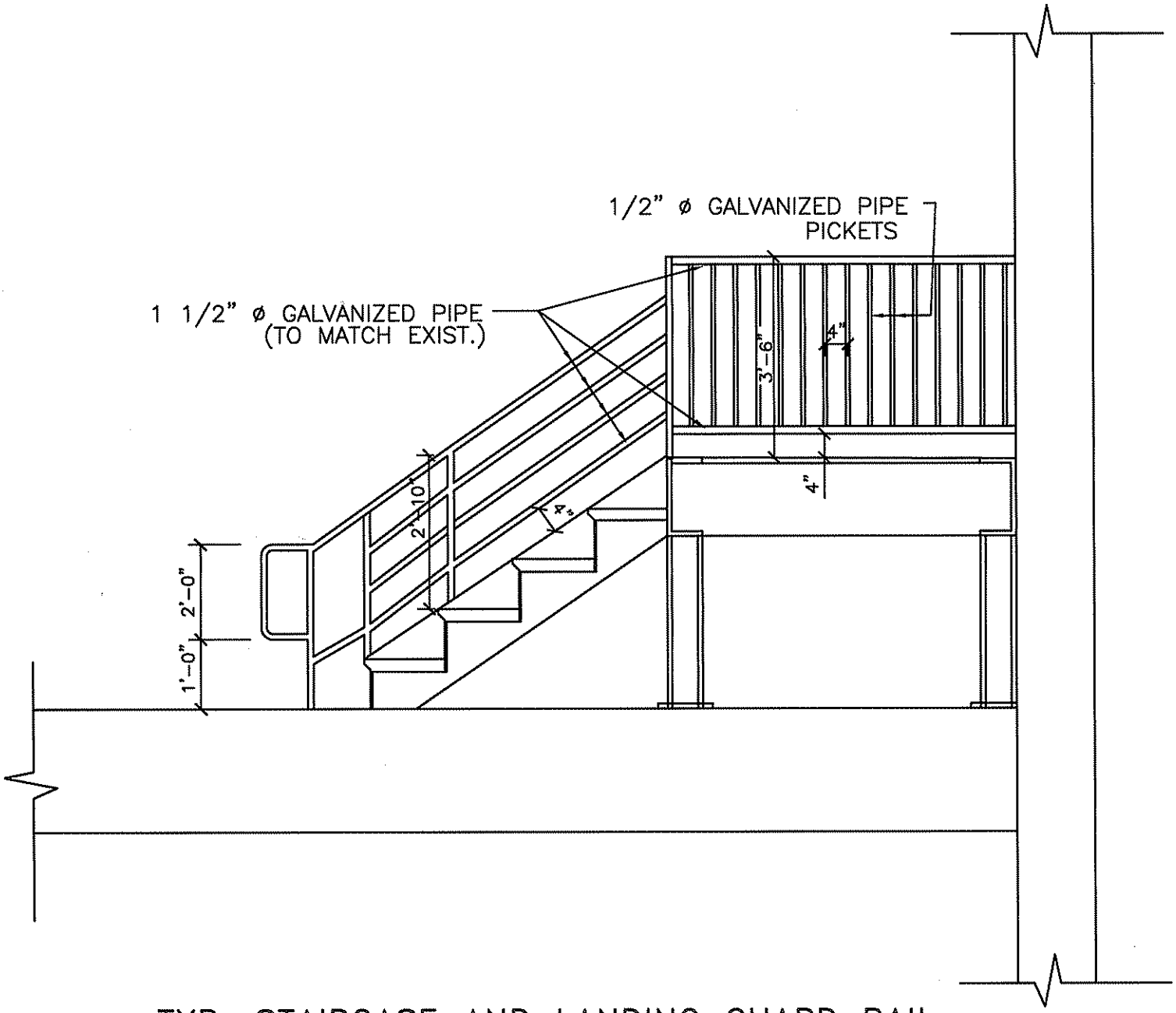

TYP. STAIRCASE AND LANDING GUARD RAIL

SCALE: NTS

1. ADD the following quantities for the "Repairs" stated in Note # 7 Sheet A-10:

	ITEMS	QUANTITIES	UNITS
A)	Repairs/Replace broken & missing 8"X16" CMU in Building	100	EACH
B)	Glass Blocks, Sizes & color to match existing	20	EACH
C)	Missing Window opening/closing crank handles	50	EACH
D)	Damaged/missing parapet coping repair	300	LF

2. ADD Quantity for the repair of top of wall for "New Work Item" 6 and 11 Sheet C-2 at pole locations for fence 100 EACH

3. ADD Quantity for missing stair & Landing Railings for stair #1 and stair #2 150 LF

4. Contractor to delete " New Work Item # 1 "Contractor shall relocate roll-up Door.....to match existing" Sheet A-9 and replace with New Work Item # 1

   NEW WORK ITEM # 1 "Contractor shall furnish and install a new motorized overhead door with all accessories to facilitate the installation for a full door opening/closing. The size of O/H Door to be 6" +/- the size of the existing O/H door & quality to matching existing. The Contractor shall finish the existing door frame, if altered, similar to the existing door frames.

5. 4" Water Fire Line on Sheet C 2 to be replaced with "a 6" Water Fire Line" to match the 6" Water Fire Line called out on P 4.

6. The Store Front shall be 1" insulating glass. There is no fire rating on store ftont.

7. ADD the Following Toilet Accessories to those listed in the Specifications Section # 10300 "Miscellaneous Building Accessories"
   a) Toilet Seat Cover Dispenser. (See Sheet #2 of 5)
   b) ADA Grab bars for H/C toilets (See Sheets 3 of 5, 4 of 5 & 5 of 5)

8. Contractor Shall Install missing handrails on both sides of stairs and at landings in stairs # 1 and # 2, as required for safety & code compliance, and as shown on sheets A-12 and A-13. The new galvanized stair railing shall match the existing railing in size and configuration. All railings shall be painted as directed by the engineer. (See Quantity Item #3 above).

9. Contractor shall install (4) additional steel joists between columns lines 7 & 8 and (1) Bottom flange steel plate on Beam 7F-7G, as shown on partial plan attached 1 of 5.

10. DELETE "Ceiling Material, Finish Height & Remarks" on "Finished Schedule" sheet A-15 for 1st, 2nd & 3rd Floors Room Nos. 111, 210 ,211, 310 & 311 Stair #1, 2 & 3 and insert the following:

ROOM NO.		CEILING MATERIAL	FINISHED HEIGHT	REMARKS
111	Stairs #1&2	GWB Type "X"	*	* Under Floor/Landing
210	Stair # 1	GWB Type "X"	*	* Under Floor/Landing
2111	Stair # 2	GWB Type "X"	*	* Under Floor/Landing
310	STAIR # 1	GWB Type"X"	*	* See Section B/A-13
311	STAIR # 2	GWB Type"X"	*	* See Section C/A-12
311	STAIR # 3	GWB Type"X"	*	* See Section D/A-12

11. Contractor shall provide a ¾ " copper water line & spigot to the lower roof for green roof water use, at location & height to be as directed by the engineer.

Formal Questions to Solicitation DCKT-2011-B-0016

Q1. What is the sq footage of the project?
A1.Total square footage will be 26,718

Q2. What is the approximate cost range for this project?
A2. The cost range is 1 million to 5 million USD.

Q3. The proposed value and is this a CBE set-aside or open market?
A3. The cost range is 1 million to 5 million USD and this project is SBE set- aside.

Q4. The Solicitation Document Section H.4.1 on page 40 requires that the Contractor install an electric meter on the incoming line and pay for all electricity used on the project. Specification Document Section 01500-1 Item 1.4 C. states that "Electric power from existing system is available for use without metering and without payment of use charges".
Question: Is the Contractor required to pay for electricity?
A4. No they are not.

Q5. Notice pre site visit is going to be held on 14th street, versus West Virginia Avenue. Can you say when the subcontractors will be allowed to view the site?
A5. The building is open and available for site visit Mon.-Fri, 9:00 am-4:00 pm except holidays.

Q6. DWG CS-2 Not e # 23- Please identify on the floor plan/elevations. Cannot figure quantity if not identified on drawings.
A6. Note #23 to be deleted. Note #10 Sht. 7A covers repairs. Quantity to be provided in this amendment.

Q7. Provide specification for masonry. None is the bid documents. (listed in index but not part of specification)
A7. Specs provided in revisions dated 11/10/10.

Q8. DWG-C-1:
Shows new work on existing/Demo plans. But also calls for new incoming telephone and electric services. No information what so ever provided on electrical drawings. Clarify if these are existing or new. If new provide details pertaining to duct bank, point of connection and demolition of existing finishes.
A8. All existing. No new duct work. See revised plans dated 11/10/10.

Q9. Note # 4 calls for curb removal for new gate track well but do not call for road patch work. Under legend "x74.2" calls for proposed elevation and there are two location along drive way where this legend is shown. New plan C-2 does not call for new paved surface.
A9. Demolished surface to be restored to match grade and slope. See revised dwg's dated 11/10/10.

Q10. DWG C-2:

a) Provide details for proposed curb.
A10a. Proposed curb to match existing concrete. Curb in the field.

b) Provide elevation/details for slide gates. Provide gate height and power operator specification.
A10b. Specs & Details provided 11/10/10.

c) Plan calls for new incoming 4" and 3" water/fire service to the building.
A10c. Utility plans calls for 3" service & 4" fire. P4 shows 6" Fire.

d) Provide utility profile, invert elevation at point of connection and specification.
A10d. Do not need profile, normally 4' below grade.

e) Provide cross section/detail/specification for trench drains.
A10e. No new trench drains.

f) Provide details/specification for parking space striping/paint.
A10f. 4" wide as shown on plans. .

g) Plan calls for new incoming telecommunication service but none shown on electrical drawings. Clarify existing or new and also provide details if new.
A10g. Existing. See revisions 11/10/10

Q11. DWG A-4:

a) A-1 calls for demolition of existing office partitions and bathroom fixtures/toilet partitions. No specifications are provided for new toilet partition and toilet accessories.
A11a. Specs provided. (Revisions 11/10/10).

b) At elevator no shaft wall is shown. Provide shaft wall detail/dimension of shaft. Provide partition type for the new partition. None is marked.
A11b. See revisions Sht. A-14

c) Clarify windows # 2/4/6 are existing or new.
A11c. Existing.

d) Note # 5 calls for tire racks. Clarify if it is OWOI, CFCI or OFCI?
A11d. Delete tire racks. See Amendment No. 2.

e) Finish grade elevation at South lane are same as shown on A-1 even after infilling lane with concrete. Do we have to raise floor drain? How can concrete bonds to existing flooring where you taper down to zero at drains?
A11e. Floor drains will be raised as required. Conc fill is not zero.

f) Is opening in the wall between proposed corridor # 1 and South lane filled with new store front or does it exist? DWG A-1 shows same details.
A11f. Exist. Wall, See A-11

Q12. DWG A-5:

a) Provide specification for lockers if new. If existing to be reused provide details.
A12a. See amendment No. 4 specification for Lockers (10300)

b) Identify partition type on floor plan at room # 207.
A12b. See Revisions 11/10/10.

c) Provide toilet accessories schedule and identify on the floor plan.
A12c. See A-19

Q13. DWG A-6:

a) Identify toilet accessories.
A13a. In specs 10300.

b) Identify partition type at room # 309.
A13b. See revised drawings 11/10/10

c) Note calls for high level windows at North wall of Corridor # 3. Are these windows existing? If not provide elevation/details.
A13c. Existing window.

Q14. DWG A6A:

a) Room # 306A Locker room F shows accordion door but not marked on plan or none shown in door schedule so clarify.
A14a. Curtain Rod & drapery-See section 5/A-19

b) Enlarged floor plan shows window # 7 with spacing. Are these new windows? If not, what is the reason behind dimensions?
A14b. Existing. See revisions 11/10/10

c) New door # 1 is installed in the exterior wall of proposed stair # 3 (going to roof). Provide wall construction detail. A-3 drawings do not call for wall demolition for proposed door # l.
A14c. See revised A-6

Q15. DWG A-9, A-10:

a) Note # 1 call for relocation of ex. OH door by +/- 6". Does that mean we have to cut out exterior wall to enlarge door opening? Is existing door wide enough to cover additional 6" opening? DWG A-1 does not call for any wall cut out for enlarged opening. Please identify on A-l.
A15a. See dwg. A-9 11/10/10. No Demo.

b) Note # 3 calls for new light fixture. Provide fixture type and circuit information on" E" drawings.
A15b. See A-9 for outdoor lighting Schedule.

c) Note # 4-5-6-7-8 & 9 are vague. Quantify each item or provide allowance. No specification is provided for masonry restoration and for glass block.
A15c. To match existing.

d) Provide type and size of cover for ex. junction box.
A15d. See revised Drawing A-9, note No. 8

e) Provide specification for pre-cast coping and also details to match existing profle. Numbering of existing doors is confusing with proposed doors. All existing HM and OH doors have same door numbers as proposed doors. Elevation calls for OH door to be # 11 but proposed door schedule door # 11 is 3x7 HM door.
A15e. See revised Drawing A-9 & new Door schedule A-15.

f) Louver shown on A-lO is new or existing?
A15f. Existing

g) Why some existing windows have window type # and some don't? No window schedule is provided on the drawings.
A15g. All windows are existing.

h) Ship ladder shown A-10 is new or existing? Existing roof plan A-16 shows ladder at column line C. Please clarify.
A15h. New ships ladder. See revised dwg A-16.

Q16. DWG A-ll:

a) Interior elevation has same legend (1) for storefront and glass door but elevation shows # 2 for door. Legend note # 2 for glass door refers to door schedule for door type. Door schedule on A15 calls for door type # 6 to be HM. Clarify if HM is mounted in aluminum storefront. Detail C/A11 calls for GWB furring with wood sill at storefront but elevation shows exposed CMU.
A16a. #6 to be "Glass Door". See A-11. Top & bottom of store front wall has masonry. The door is mounted on floor slab.

b) DWG A-4 does not call for any partition type in the corridor # 1 North wall. Please clarify the intent and provide revised drawings.
A16b. See A-15 for finish of Corridor # 1

c) Detail shows Kawneer Trifab 400 storefront at typical bay but no specification is provide. Please provide guide line specification.
A16c. Specs provided.11/10/10

Q17. DWG A-12 & A-13:

a) Please clarify all existing wall rails and guard rails at existing stairways are to be replaced with new one. DWG # A-1, A-2 & A-3 do not call for any such demolition. Please clarify/identify on respective drawings.
A17a. Existing hand rail to remain and where missing new hand rail to be installed to match existing

b) Detail D/A-12- Provide more detail about structural column/wall channel support and guard rail for stair # 3. Also clarify is steps are pan filled concrete or checkered metal plate steps.
A17b. See revised dwgs 11/10/10

c) DTL 3/A-12 refers to A-18 but A-18 is structural drawing. Also detail is for wall at hoist way door head. Are we replacing existing elevator shaft walls? None is called for on the demolition Drawings. If not, then why detail for? As is entire bid document is full of error and confusion, why add more by providing unnecessary details?
A17c. See revised drawings. New walls.

d) A-13 refers to structural drawing 5-4. Note that there are no Structural drawings in the entire bid document. If stirs, roof and GWB ceiling is existing at stairways, why bother providing detail to create confusion.
A17d. See revised drawings. New finish/per schedule A-15.

Q18. DWG A-14:

a) Are we doing any work at the existing elevator shaft and pit? If not why bother showing hoist way door head detail, elevator pit foundation detail? If new walls are constructed then identify on each floor plan with proper details.
A18a. See drawings revised 11/10/10. New masonry walls, new hydraulic piston, new sump & new elevator to be accommodated in existing pit/or alter accordingly. Elevator contractor to visit site and determine what is to be altered for his elevator to function. See specifications

Q19. DWG A-15;

a) DTLl/ A-13 are for jamb at OH door. Are we providing new steel channel at jamb? Why is detail provided? If new steel channel then provide size.
A19a. See revised Drawings

Q20. DWG A-17:

Note on drawing calls for parapet to be cut down to *6"* and refer to section A-A. Section A-A is not clear about the extent of work along the roof parapet i.e. how long of the parapet area to be cut down. Also detail do not provide detail how to patch parapet wall after cutting down to *6"* i.e. roof flashing, new stone coping etc details are necessary to work our cost.

A20. See sheet A-16 Cut down masonry wall, install 2x pressure treated wood nailer in masonry & provide steel cap to match existing.

Q21. DWG A-18:

Note that A-18 shows structural details so in reality it should be noted as *"5"* drawing. Impact of installation of new 22K5 joist is shown any of the architectural/mechanical and electrical drawings i.e. removal/reinstallation of existing ducts, electrical conduit, utilities in the way of new 22K5 joists and steel plates.

A21. See A-17 Revised drawing dated 11/10/10. There are adequate clearances for the installation of the joists & plates from the underside of the roof. A site visit is necessary.

Q22. Extent of work along parapet.

A22. See revised drawing dated 11/10/2010 & amendment No. 4 sheet 3 of 4.

Q23. What should be the width of pier in between cuts? If look at floor plan it show two cuts in 12' long parapet but section shows only one cut.

A23. There is only one cut.

Q24. What do you finish top of cut parapet?

A24. See amendment No. 4, sheet 1 of 4

Q25. Do we install new rail on top of parapet as shown on A-16? What is the material for rail/finish and extent of rail?

A25. See amendment No. 4

Q26. Provide ex. roof manufacturer information for warranty purpose.

A26. The existing roof manufacturer is unknown.

Q27. What type of coping goes on top of the parapets?

A27. See amendment No. 4

Q28. On A-17 detail for beam between columns shows steel plate at span-B but floor plan does not call for that. As per note # 2 where new steel plate is attached it shows with heavy lines but floor plan shows no heavy lines between column line A-B and J-K at column 5 & 7. Please clarify.

A28. No plates needed between column line A-B & J-K at column 5&7

Q29. Please provide the following missing specification section(s):

a. Caulking:
   A29a. See attachment No. 1
b. Ceramic tile:
   A29b. See attachment No. 2
c. Quarry tile:
   A29c. See attachment No. 3
d. Lockers:
   A29d. n/a
e. Tire rack systems:
   A29e. n/a
f. Door motors:
   A29f. n/a
g. Louvers with bird screens and/or motorize shutters:
   A29g. n/a
h. Flat Screen TV:
   A29h. n/a
i. Infrared electric heaters:
   A29i. Items already existing
j. Sum pump:
   A29j. See plumbing drawing
k. Expansion tank:
   A29k.Not included
l. Wall hydrant:
   A29l. See drawing
m. Ceiling diffuser:
   A29m. See drawing

Q30. There are two completion dates: 90 days and 180 days shown on section C.2.3 and F.1. Which is the correct completion date? Please clarify.
A30. The project completion time is 180 calendar days.

Q31. Are testing and inspections part of the scope of work?
A31. Yes.

Q32. Section G.17.4 requests the Contractor to employ watchpersons to safeguard the site during all period in which the Contractor is not performing work on-site. Please confirm if this site protection requirement is correct.
A32. A watchperson is not required; however the District will not be responsible for any losses of materials, tools, equipment at the site.

Q33. Will the existing facility be occupied during construction? If so, please define the areas of occupancy, so we can coordinate with the work.
A33. The facility (tire shop) will be occupied only on first floor. The contractor shall be given half of the floor in a two phase job.

Q34. There are a lot of equipments and materials in the existing facility. Will the Owner removes those items before construction starts? Please clarify.
A34. Equipment and materials in the way of the contractor shall be removed from the site by the District of Columbia Government.

Q35. Section 01100, part 1.3.G.2 notes to include an emergency generator for this project. Is an emergency generator part of the scope of work? If so, please provide the appropriate bid documents.
A35. The emergency generator is on the roof (existing).

Q36. The proposed lighting floor plans on drawing E2, E5, and E8 have referenced light fixture types on the floor plan. Where is the specification for these types of light fixtures? Please provide the missing light fixture schedule as referenced to the floor plan.
A36. Lighting fixtures specs are attached within see attachment No. 4

Q37. Please confirm the following works are part of the scope. If so, please provide the missing specification and/or drawings:

a. Security system:
   A37a. Yes, specs are attached herein as attachment No. 5
b. Telecommunication system:
   A37b. No
c. Public address systems:
   A37c. No
d. ATS (Automatic Transfer Switch):
   A37d. Existing ATS
e. Infrared electric heaters:
   A37e. Existing
f. Sum pump:
   A37f. Yes, specs is on P-4
g. Expansion tank:
   A37g. No
h. Wall hydrant:
   A37h. Yes - see column A, Dr. P-4
i. Ceiling diffuser:
   A37i. Yes

Q38. Drawing C-1 and C-2 show proposed 4" surface drain, 8" surface drain, manhole, clean outs, 4" sanitary line, 3" water line, 4" water line, 12" grate, gas line, and underground incoming telephone service. There are no profiles and specifications given for water, sanitary and storm lines. Please provide specifications and profiles for water, sanitary and storm line.
A38. The work referred to here is existing.

Q39. There isn't any demolition note given on drawing A-2 Existing Second Floor Plan and A-3 Existing Third Floor Plan. Is there any demolition work required at the second and third floors?
A39. There are none.

Q40. Drawing doesn't show any demolition work of the existing roof. Are we laying the Green Roof over the existing roof? This may cause the existing roof manufacturer warranty to be voided. If that is the case, who is responsible for the existing roof manufacturer warranty?
A40. The contractors are responsible for their work only.

Q41. Drawing C-2 shows two electrical sliding gates to be installed. The 32' gate has a concrete well for the gate's sliding track. Will the 50' gate required the same type of concrete well? Please clarify.
A41. No.

Q42. Drawing A-4 has New Work Items #1 to provide 6" concrete fill slope to floor drain. Will the 6" concrete require any reinforcement and what type?
A42. Yes, 6'x6' – W1.4 x W1.4 WWF.

Q43. Drawing A-17 New Work Item #2 indicates, *"The contractor shall install new steel plate at underside of bottom flange as shown on Beam Section Detail, W18x40."* Will the new steel plates be installed at the bottom flange of all W18x40 beams shown on the drawing or just at the area to support the Green Roof? Please clarify.
A43. The steel plates go under W 18X40 beams in the green roof areas.

Q44. Drawing A-4 has the proposed First Floor Plan in the Shop Supervisors Office (room #101) shows carpentry work. Please provide details and elevations for this carpentry work.
A44. Carpentry work has been relocated to Room 100. No carpentry work is specified for Room 101.

Q45. Drawing A19 indicates cabinet and countertop with sink at the lunch room. On the floor plans, it doesn't show this lunch room. Where is the location of the lunch room? Please clarify.
A45. The lunch room is employees lounge area.

Q46. Detail F/A15 indicates wood trim at door #7 of the head jamb. What type of wood is specified for this wood trim? Please the appropriate information.
A46. Trim will be hardwood sugar maple wood.

Q47. There are specification sections 07421 Metal Wall Panel and 07810 Applied Fireproofing given, but no drawing details reference these sections. Please provide drawing details for these specification sections.
A47. All exposed structural steel I-Beams & Columns shall be fireproofed according to these specifications.

Q48. Drawing A-1, Demolition note #7, *"Remove existing hydraulic piston for installation of new elevator hydraulic piston"*. Please provide the depth, materials and other details of the existing hydraulic piston, so we can bid accordingly for removal of existing piston.
A48. The piston is steel, forty feet deep.

Q49. Detail C/A-11 shows drywall type #6 Furred Out Wall (as reference on drawing A18). However, drawings A-4, A-5, A-6, and A-6A don't show any type #6 wall. Please clarify where we are using drywall on CMU walls on the drawings A-4, A-5, A-6 and A-6A.
A49. All exposed CMU walls in stairwell, offices & corridors shall be finished with GWB in accordance with detail No. 6 on A-18

Q50. Drawing A-9 and A-10, note #9, *"The contractor shall install all damaged or missing coping with new coping at top of walls/parapets with coping to match with adjacent areas."* Drawing A-16 shows, *"Parapet section to be cut down to 6" see section A-A."* We need to remove all the coping and 6" masonry to do the work as per the drawing A-16 and section A-A. Both drawing notes are conflicting with each other. Please provide actual quantities, locations and drawing details of missing coping so we can bid accordingly.
A50. See amendment No. 4

Q51. Drawing A-16, section A-A doesn't show actual details of coping, existing flashings and railings. Please provide the more elevations and details of coping, flashings, and railing.
A51. See amendment No. 4

Q52. Drawing C-2 New Work item #6 indicates, *"Contractor shall repair existing wall and curb, as directed by the Engineer. If wall is damage as a result of coring for fence posts."* During the site visit, the existing concrete wall and curb appears to be damaged and deteriorated. Are we to assume to replace and/or repair the entire wall and curb? Please provide details for repairing and/or replacing the wall and curb.
A52. Prepared curb as per addendum No. 4

Q53. Drawing A-9 Item #7 notes, *"The Contractor shall remove all broken glass, masonry units, brick and replace with new units to match existing in material, color and dimensions."* Please provide quantities for each item mentions to be removed and replaced.

A53. ADD the following quantities for the "Repairs" stated in Note # 7 Sheet A-10:

	ITEMS	QTY'S	UNITS
A)	Repairs/Replace broken & missing 8"X16" CMU in Building	100	EACH
B)	Glass Blocks, Sizes & color to match existing	20	EACH
C)	Missing Window opening/closing crank handles	50	EACH
D)	Damaged/missing parapet coping repair	300	LF

Q54. Drawing C-2 shows three metal gates. However, there isn't any detail given for these gates. Please provide detail for these items.
A54. See attached details in attachment No. 6

Q55. Drawing C-2 New Work Item #4 indicates, *"Construct sliding well as per details (this sht.) Restore demolished hatched area (see sht. C-1) with asphalt concrete to match adjacent area and grade."* Please provide detailed drawings and drawing section for this patch work.
A55. 4" of CR-6, 4" asphalt concrete, 1 ½" surface asphalt mix on compacted soil.

Q56. Drawing A-19 Locker and Bathroom Details shows ceramic tile 5'-6" high on the bathroom walls. Drawing A-15, Room Finish Schedule states ceramic tile 5'-0" high on the bathroom walls. Please clarify which height is correct.
A56. Please use 5'- 0" ceramic tile in bathroom, change detail 3, A5/A19 accordingly.

Q57. Please specify which specification to use for the installation of the green roof. There is one specification in section 07710 part 4 page no. 8 and another in section 13010. Should the installation contractor have the option to choose any system between both systems for the green roof shown on drawing A-16?
A57. Delete section 07710 from the specification section.

Q58. Section B-B on Drawing C-2 shows a detail (4" masonry/block) for the fence wall. Which is to be used, 4" brick or 4" split-face block to match the existing masonry building?
A58. Use 4" brick.

Q59. Drawing P6 shows a gas riser diagram. Is the new or existing work? Please clarify.
A59. This will be new work.

Q60. Drawing M4 shows mechanical equipment "V.H.-1" in the mechanical room #106. and another equipment unit labels CUH-1 in the stairwell, just outside of the mechanical room. This mechanical equipment "V.H.-1" and CHU-1 are neither in the schedule nor specification. Please provide the appropriate information about these units.
A60. See M7 of the electrical baseboard schedule.

Q61. Drawing M5 at column lines 3K references a fuel oil system. Is this part of the scope of work? If so, please provide more detail and specification.
A61. No pump needed, generator uses natural gas.

Q62. There are exhaust fans shown on the proposed mechanical floor plans M4-M6. However, the exhaust fan schedule on drawing M7 notes all of these exhaust fans exist. Are new or existing exhaust fans? Please clarify.
A62. All exhaust fan existing, if missing provide to match existing as indicated on schedule.

Q63. There is a symbol (an oval with two squares inside) on drawing M-4 in the mechanical room that is not labeled. What does this represent? Please clarify.
A63. Drawing M – V

Q64. Are there to be any new roof and overflow drains installed/ incorporated into the new Green roof? If so, please provide appropriate details and plumbing specification.
A64. No.

Q65. The emergency eyewash shown on drawings A-1 and A-4 does not appear to be on any of the existing or proposed plumbing drawings. Is this part of the scope of work? If so, please provide appropriate detail and specification. Please clarify.
A65. Eye wash existing, not part of scope.

Q66. Where does the HPCW piping originate? The piping disappears on drawing P-4 & P-5, and there are no existing or proposed pumps in the drawings or specifications. Also, there is also no specification for pressure pipe and fittings. Please clarify.
A66. Delete HPCW piping from the drawings.

Q67. There is no specification in division 15 for the MOD's shown on drawing M-4. Are they new or existing?
A67. The modifications are new and need to be furnished and installed by the contractor.

Q68. Drawing P-1 shows an existing 2" gas service entering the building at column lines 2/3/A with a note attached to this pipe indicating that for continuation to see drawing P-6. However, drawing P-6 does not show continuation for this line. Please provide the missing information.
A68. 2" gas plumbing does not extended to third floor, see note No. 2, drawing P1.

Q69. Drawing E-3 shows a riser for Fire Alarm System/ Devices. Are these devices new or existing? Please clarify.
A69.These are new devices.

Q70. Drawing E-11 shows panel schedules, but none of them indicates the existing panels which are shown on drawing E-3. Please clarify.
A70. Look at drawing E-11

Q71. Drawing C-1 shows existing Telephone and Electrical Services under the slab but Note # 19 requires that the contractor shall coordinate the removal of the overhead power lines and telephone lines with responsible companies. However, there are no overheads lines shown on this drawing. Is this part of the scope of work?
A71. Delete note no.19 in drawing, C-1 in its entirety

Q72. Drawing C-1 & 2 show 4" incoming water piping for Fire Service. Drawing P-5 shows a 6" pipe for the Fire pipe in the same location. Which is the correct piping? Please clarify.
A72. 6" is correct. Substitute 4" line in C-1 & C-1 with 6"

Q73. Do the interior aluminum storefront windows and entrance doors require being fire rated? Please confirm.
A73. No.

Q74. Please clarify extent of spray on fire proofing. Contract document has specification for spray on fire proofing but not shown on the drawings. Also none of the existing steel members in the entire building has spray on fire proofing. Clarify intent of metal wall panel section in the specification. None is shown on the drawings.
A74. See amedment No.4

Q75. As requested in the following e-mail from our roofing contractor, please provide existing roofing manufacturer name and also clarify status of warranty.
A75. See question No.26

Q76. Need hardware sch.

A76. See attached hardware schedule No. 9

Q77. Need elevator fixture sch.

A77. See elevator fixture per attachment No.7

Q78. Need plumbing fixture sch.

A78. See sheet 2 of 10 of attachment No. 8

Q79. What is the new and existing in stairways?

A79. Everything existing in stairwell except as called for as new work in the plans.

Q80. Is there any existing elevator shaft?

A80. Yes

Q81. Is P-4 water codex high-low per code?

A81. No.

Q82. Are ceilings 2x4 per drawings or 2x2 per spec?

A82. 2"x4' ceiling tiles

Q83. Is it safe to assume scale on page A-5 is 1/8" not ¼" as shown?

A83. Yes

Q84. Are all doors new or does existing doors remain?

A84. Door/Frame schedule and hardware schedule on A-15 to be deleted and to be replaced with "Door/Frame schedule" and "Door Hardware schedule sheet"

Q85. What door type are Rm 114&100?

A85. See revised door schedule attachment No. 9

Q86. Are flat screen TV's provided by owner?

~~A86. Provided by contractor.~~

Q87. What bathrooms ACC are required?

A87. See attached sheets 3, 4, 5, 6, & 7 of 10, see attachment No. 18

Q88. Page P-3 has roof drain note says see detail #3 this sheet there is no detail on this. Please advise.

A88. Delete note "Roof Drain (see detail #3) sheet" on P-3

Q89. Doors D-2 & D-6 no glass type given.

A89. Use D-4 in lieu of D-2, use 1" insulated glass for D-6

Q90. Room 301 is duct shaft finish sch shows VCT vinyl base ACT is the finish for different room #.

A90. Delete finishes on Room 301.

Q91. Drawing A-4 Proposed Ground Floor Plan doesn't show wall types. Please provide wall types on drawing A-4.

A91. Use Type 3 Walls Typical throughout

Drawing section B/A-13 shows ½" thick type 'X' gypsum wall board ceiling at stair #1, #2, #3, and elevator. Drawing A-15 Schedule doesn't show any type of ceiling at Stair #1, #2, #3, and elevator. Do we need to provide drywall ceiling at staircase #1, #2, #3 and elevator? Please clarify. A91. See Chart.

ROOM NO.		CEILING MATERIAL	FINISHED HEIGHT	REMARKS
111	Stairs #1&2	GWB Type "X"	*	* Under Floor/Landing
210	Stair # 1	GWB Type "X"	*	* Under Floor/Landing
2111	Stair # 2	GWB Type "X"	*	* Under Floor/Landing
310	STAIR # 1	GWB Type"X"	*	* See Section B/A-13
~~311~~	~~STAIR #~~ 2	~~GWB~~ Type"X"	~~*~~	~~* See Section C/A-12~~
311	STAIR # 3	GWB Type"X"	*	* See Section D/A-12

Q92. Drawing A-3 Existing Third Floor and Low Roof Plan shows existing Roof Protection Pavers. There are no pavers found at the time of site visit, **please find attached photo.**

A92. There are no pavers existing, however, new pavers shall be installed per drawing A-16

Q93. Intentionally omitted.

Q94. Please check the door schedule, page A-15. Door type 1 and Door type 11 cannot be correct. Nobody can fit thru said doors (restroom stalls of course) and to make them work otherwise doesn't make sense. Also the plans call for these doors to have 1 1/2 hr fire ratings??? See if you can find someone to make sense of this, please!

A94. See revised door schedule attachment No. 9

Q95. On your FTP Site the only information available is the drawings. Is there a separate set of specifications for this project?

A95. Hard copy specifications are available in the bid offices located at Reeves Center.

Q96. Drawings M-7 Mechanical Schedule

a – The Fan Schedule shows all fans to be existing. However, drawings M-4, M-5 and M-6 show Fans EF4, EF5, EF6, EF7, EF13 and EF14 to be new.

A96a. EF4, EF5, and EF6 are new fans. EF7 are existing, EF13 & EF14 are to be deleted from schedule.

b – Infrared Electric Heaters 1 – 40 are not shown on the mechanical drawings.

A96b. Infrared Electric Heaters are still in existence.

c – Electric Base Board Heaters BBH-1 thru BBH-27 is listed in the schedule. However, the drawings do not indicate the locations of BBH-7, BBH-8, and BBH-15 thru BBH-22. There are however double unit # designations for BBH-1 thru BBH-5, BBH-9, BBH-10 and BBH14. Are all of the designations BBH-1 thru BBH-27 to be used?

A96c. Yes, the heaters are 1-27; locations of misidentified units will be indicated at a later date.

Q97. There are Qty 2 MOD's located on the M-4 drawing, there are notes on the M-7 drawings indicating interlocking certain fans with the existing RTU's, there are also smoke and fire dampers indicated in the ductwork. Is there a control spec or a sequence of operation drawing available?

A97. The mods shall be controlled by the thermostat adjacent to the damper. The dampers are to be multi-blade to suit the existing openings. See attachment No. 10

Q98. Drawing M-5 shows an In Line Oil Pump w/ ¾" FOS piping up to the Generator Tank o the roof. Is this to be a new pump or is this an existing pump? If this is to be a new pump what is the acceptable piping material?

A98. The generator uses natural gas. No pumps are required.

Q99. Drawing P-4 at column line A-8 indicates the location of the new incoming 3" water service with 2 ½" CW up to the ceiling. However, that's where the domestic water piping stops. The water riser diagram on drawing P-6 only indicates water piping for the fixtures. Is there a complete water supply riser diagram?

A99. The 3" water line shown on drawing P-4 is to be extended up to the 2 1/2" horizontal pipe shown on drawing P-5.

Q100. In regards to the fixtures on the 1st, 2nd, and 3rd floors:

a. Are there existing fixtures to be removed and replaced on all 3 floors or just the 1st floor?
A100a. 1ST Floor only
b. The fixture schedule calls for wall hung P-1 water closets. The drawings indicate that the waste piping and water piping for the bathrooms has already been done. Does this include the water closet carriers in the chase wall or do the carriers need to be provided as well?
A100b. Contractor shall furnish and install water supply and drainage per attachment No. 11
c. The fixture schedule indicates type of fixture only. Is there a fixture spec available?
A100c. See supplement specs section 10300 issued on 11/10/10.
d. Are the floor drains and floor drain piping existing or is there to be new piping and floor drains installed?
A100d. Floor drains and piping are in existence.

Q101. Drawing P-6 has a gas riser diagram with the gas pipe supplying the roof top equipment. Is this existing to remain or new gas piping to be installed?
A101. This is will be new gas piping to be furnished and installed by contractor.

Q102. Sheet 1 of four of Amend #4 that the existing parapet wall is to be cut down to 9" above existing roof and re-built. Is this for the entire parapet or is it only for the 7 foot wide section of the parapet? If for entire wall then how is the new parapet railing to be attached per the detail shown on sheet 4 of 4
A102. This is only for a 7' wide section of parapet in one location as shown on plan.

Q103. Dealing with the fence, what is the requirement for installing the new perimeter security fence? Will it be permitted to remove the entire existing fence before installing the new fence or will only the sections that can be replaced the same day with new fence be permitted to be removed?
A103. You can demolish all existing fence at once, however, you must install temporary fencing or otherwise secure the facility until the new fence is installed.

Q104. Dealing with the fence, the new detail shows the fence style but does not include post size and gauge, picket size and gauge, suggested manufacturer of fence, whether new fence is tubular steel or aluminum. Please provide.
A104. See spec's section 05531

Q105. Are there any metal wall panels on the project? We cannot find any details showing where.
A105. No.

Q106. Is there any signage? The specification section states to provide as indicated on the drawings. None is shown that we can see.
A106. No.

Q107. Will quantities be provided to price the repair and replacement work for the glass, masonry etc per notes 4 thru 7 on elevation drawings as indicated during the walk thru or will this be the bidders responsibility? At who's discretion?
A107. See answer from question 53

Q108. Should all of the exiting ductwork at the project be provided with insulation? There is no mechanical insulation specification. There is no insulation schedule on the project drawings.
A108. No.

Q109. Should the storefront frames and glass in the masonry wall between the office corridor and the shop be fire rated?
A109. No.

Q110. Should the glass in the storefronts between the office corridor and the shop be insulated glass?
A110. Yes – it should be 1" insulated glass.

Q111. Should the exposed ceiling system and beams and joists in the shop be painted?
A111. Yes, please apply two coats of appropriate paints per specs.

Q112. No rough-in has been provided for new XB-2 on building perimeter at top of existing walls. No power provided on panel schedules for these lights. Please clarify this item.
A112. These are new lights.

Q113. "Existing" transformer shown on the site plan and electrical plans does not exist. Please clarify any work required by the contractor in this area.
A113. No work is required from the contractor for the transformer.

Q114. "Red and Green" lights shown centered over. Overhead doors do not exist. Please provide specification for these fixtures.
A114. Delete the requirement green traffic lights in A.9

Q115. The following questions pertain to the elevator installation on the project:

a. No elevator machine room is shown:
A115a. See Room 102, Dr. A-4
b. Existing hoistway openings are not plumb with the elevator pit:
A115b. See note 7 on A-4 and details on A-13
c. Existing hoistway openings are not square:
A115c. See note 7 on A-4 and details in A-19
d. No support angles are shown for the hoistway doors:
A115d. Provide shop drawing
e. Project specifications indicate that a 40 horsepower motor is to be utilized. This will require 480 volt A/C Power. Electrical plans indicate that 120/208 volt service is available:
A115e. 480 voltage will be provided
f. The existing elevator well hole is capped off. Who is to remove any backfill which may be present in this casing?
A115f. The contractor is responsible to demolish and remove existing and install new equipment.
g. There is a concrete column located in the corner of the existing elevator pit which is in conflict with the elevator platform:
A115g. See detail A1/1, Drawing A-1 and Note 6 on A-1

Q116. Are doors and hardware available to complete the masonry frames already installed at the project.
A116.Yes, see revised door schedule attachment No. 9

Q117. Are parts on site to complete electrical panels, switches and devices?
A117. No, the contractor will provide necessary parts.

Q118. Please provide specifications for all security cameras and devices.
A118 See attachment No. 5 for security camera specification.

Q119. Have the emergency generator and automatic transfer switch been tested and approved.
A119. No.

Q120. Plan #E-5 indicates that hi bay fixtures are existing. No lamps are in these fixtures. The circuits between these fixtures, they are not operative. Please clarify this item.
A120. The fixtures are to be provided with lamps and wired to the respective panels by the contractor.

Q121. Existing fire alarm enunciator and fire alarm control panel are not in place. Is this equipment available?
A121. No, the equipment is not available, the contractor must furnish and install the fire alarm system according to plan.

Q122. Project specification section #01040 indicates that an environmental control officer and a project coordinator are to be assigned to this project. Given the advanced state of this project, should the bidders still have to carry this expensive cost in their general conditions estimate.
A122 Disregard this request.

Q123. What is the purpose of the 8 empty conduit located on the southeast corner of the building.
A123. The conduit bank is for a transformer that would be installed by other.

Q124. Architect stated at project pre-construction meeting that existing roof was to remain. Specification section #02411 - Selective Demolition, paragraph 3.8.A.1 states that entire roof and existing mechanical equipment is to be removed. Please clarify this item.
A124. Delete paragraphs 3.8.A.1 as provided by amendment No.4, line item No. 3

Q125. Plan sheet #A-16 indicates that a 2-line steel railing is to be installed along the building parapet at the north, east and west elevations. Building elevations do not show this railing. Please clarify this item, and provide installation details, if required.
A125.See amendment No.4 pg's 3 and 4 for revision to steel railing.

Q126. Specification section # 07810 - Applied Fireproofing does not contain a schedule or listing of which structural steel items are to be fireproofed. We have no structural plans. Project plans do not show this material. Please clarify this item.
A126. See line item No.4 on amendment No.4

Q127. Plumbing plans to not indicate any water lines or hose-bibbs on low roof areas to maintain green roof areas. Please clarify this item.
A127. See attachment No. 12, revised Utility Plan Section C-2A

Q128. North elevation of structure - contains a large amount of exposed foundation block above finished parking lot grade should the bidding contractors for this project be expected to correct this situation.
A128. Item not to be corrected.

Q129. There is no permanent water or fire service into the building. The site has been permanently paved. The project site utility plan provides no details for those installations. Please furnish all WASA required plans and details for those items so that proper estimates can be performed.
A129. See attachment No. 12, revised Utility Plan Section C-2A

Q130. There is no permanent natural gas service into the building. Project site plan provides no details on this service. Please provide details and locations for this service so that proper estimates can be performed.
A130. Contractor shall install new gas and water services according to attachment No. 12

Q131. There is no permanent power into this facility. The "existing" transformer shown on the sheet #C-2 does not exist. Please provide any and all Pepco required details so that a proper estimate can be performed on this item. Please provide details, plans and profiles for this item.
A131. Transformer to be provided by other.

Q132. There is a meter in the electrical switch gear room but there is also temporary power for the street, has Pepco made their final connections.
A132. No.

Q133. Various areas throughout the building there is existing installed electrical wiring throughout the structure that is indicated on the drawings to be installed. Are we to remove the existing wiring and install new? If not, who is to guarantee the existing wiring to be free from defects?
A133. All the wiring has to be replaced.

Q134. On C-2 note # 5 calls for new 4' H fence on top of ex. curb but at the same time it shows ex. 9' H chain link fence (just above double leaf gate on the rear of the building. Please clarify if we are keeping ex. fence? If it is a new 4' H fence why you are installing (note # 9) 4'wx **6'H** pedestrian door in one leaf of the swing gate panel?

A134. Drawing C-2 "New Work" Delete Item # 8 & 9 and add new "New Work" ITEM # 8 & 9 as follows:

8. INSTALL NEW MANUAL SLIDE GATE 12 ft. X 4 ft. HIGH

9. INSTALL NEW CURB/FOUNDATION WALL (to match existing) and 2 leaf12ft X 6ft high Swing gate.

DELETE NOTE on PLAN calling for 4'X6' high Pedestrian Door.

*Note – The following Attachments are
1. Revised specifications to include Wheel Stops (02150-1), see attachment No. 13
2. Insulation (07510-1), see attachment No. 14
3. Casework, Cabinets, and Equipment (11011-1), see attachment No. 15
4. Roof Walkway Pavers (07200), see attachment No. 16
5. All ADA compliance & installation see attachment No. 17
6. Additionally, plan and elevation of 1st, 2nd, and 3rd floor toilets, see attachment No. 18
7. Bathroom signage, see attachment No. 19
8. Staircase & Landing Guard Rail Diagram, see attachment No. 20
9. Additional Revisions see attachment No. 21