AMENDMENT OF SOLICITATION/MODIFICATION OF CONTRACT	1. Contract Number DCKA-2009-B-0183	Page of Pages 1 | 109

2. Amendment/Modification Number	3. Effective Date	4. Requisition/Purchase Request No.	5. Solicitation Caption
Six (6)	See 16C		Reconstruction of Eastern Avenue Bridge over Kenilworth Avenue, NE

6. Issued By: Code
District Deportment of Transportation
Roads and Highway Division
2000 14th Street, NW, 6th Floor
Washington, DC 20009

7. Administered By (If other than line 6)
District Deportment of Transportation
Infrastructure Property Management Administration
64 New York Avenue NE
Washington, DC 20002

8. Name and Address of Contractor (No. Street, city, country, state and ZIP Code)

Code | Facility

(X) 9A. Amendment of Solicitation No. Six (6)

9B. Dated (See Item 11)

10A. Modification of Contract/Order No.

10B. Dated (See Item 13)

11. THIS ITEM ONLY APPLIES TO AMENDMENTS OF SOLICITATIONS

[ ] The above numbered solicitation is amended as set forth in Item 14. The hour and date specified for receipt of Offers [x] is extended. [ ] is not extended. Offers must acknowledge receipt of this amendment prior to the hour and date specified in the solicitation or as amended, by one of the following methods: (a) By completing Items 8 and 15, and returning _____ copies of the amendment: (b) By acknowledging receipt of this amendment on each copy of the offer submitted; or (c) By separate letter or fax which includes a reference to the solicitation and amendment number. FAILURE OF YOUR ACKNOWLEDGEMENT TO BE RECEIVED AT THE PLACE DESIGNATED FOR THE RECEIPT OF OFFERS PRIOR TO THE HOUR AND DATE SPECIFIED MAY RESULT IN REJECTION OF YOUR OFFER. If by virtue of this amendment you desire to change an offer already submitted, such change may be made by letter or fax, provided each letter or telegram makes reference to the solicitation and this amendment, and is received prior to the opening hour and date specified.

12. Accounting and Appropriation Data (If Required)

13. THIS ITEM APPLIES ONLY TO MODIFICATIONS OF CONTRACTS/ORDERS, IT MODIFIES THE CONTRACT/ORDER NO. AS DESCRIBED IN ITEM 14

[ ] A. This change order is issued pursuant to: (Specify Authority)
The changes set forth in Item 14 are made in the contract/order no. in item 10A.

[ ] B. The above numbered contract/order is modified to reflect the administrative changes (such as changes in paying office, appropriation date, etc.) set forth in item 14, pursuant to the authority of 27 DCMR, Chapter 36, Section 3601.2.

[ ] C. This supplemental agreement is entered into pursuant to authority of:

[ ] D. Other (Specify type of modification and authority)

E. IMPORTANT: Contractor [ ] is not, [X] is required to sign this document and return _____ copies to the issuing office.

14. Description of amendment/modification (Organized by UCF Section headings, including solicitation/contract subject matter where feasible.)

The subject solicitation is amended as follows:

The bid opening date is extended to:

JULY 27, 2009 @ 2:00 P.M.

DELETE the Appendices Page v and **REPLACE** with the attached Appendices Page v-r.

DELETE the General Decision number DC080001, Modification Number 22 dated 06-26-09 and **REPLACE** with the new General Decision number DC080001, Modification Number 24 dated 07-10-2009 attached.

S.P. 13 - The following special provision is amended as follows:

In accordance with the applicable provisions of 29 CFR, Part 1 which requires that the correct wage determination and the appropriate wage rates therein be incorporated into this contract. General Decision No. DC080001, Modification No. 24, dated 07/10/2009 is bound herein and contains the specific applicable wage rates which are:

PAVING AND INCIDENTAL GRADING RATES

Further, as set forth in 29 CFR, Part 1, Section 1.6(c) (3) (IV), if the intent to award letter is not issued within ninety (90) days of bid opening, all intervening modifications (or new wage decision) are applicable. The contractor will be reimbursed this added labor

Except as provided herein, all terms and conditions of the document referenced in Item (9A or 10A) remain unchanged and in full force and effect

15A. Name and Title of Signer (Type or print)		16A. Name of Contracting Officer Jerry M. Carter	
15B. Name of Contractor (Signature of person authorized to sign)	15C. Date Signed	16B. District of Columbia (Signature of Contracting Officer)	16C. Date Signed 7/14/09

APPENDICES

SUBCONTRACTOR APPROVAL REQUEST FORM	(1 page)
CONSTRUCTION ZONE TRAFFIC CONTROL DEVICE INSPECTION FORMS	(62 pages)
FEDERAL-AID PROJECT SIGN	(1 page)
REQUIRED CONTRACT PROVISIONS, FEDERAL-AID CONSTRUCTION CONTRACTS	(20 pages)
SPECIFIC EQUAL EMPLOYMENT OPPORTUNITY RESPONSIBILITIES	(6 pages)
TRAINING SPECIAL PROVISIONS	(3 pages)
DISADVANTAGED BUSINESS ENTERPRISE PARTICIPATION	(3 pages)
EQUAL EMPLOYMENT OPPORTUNITY/AFFIRMATIVE ACTION REQUIREMENTS	(2 pages)
MONTHLY EQUAL EMPLOYMENT OPPORTUNITY REPORT	(2 pages)
GENERAL WAGE RATE DETERMINATION	(11 pages)
EMPLOYEE TRAINING REQUIREMENTS	(2 pages)
AMERICAN RECOVERY AND REINVESTMENT ACT MONTHLY REPORT	(3 pages)
D.C. WATER AND SEWER AUTHORITY SPECIFICATIONS	(454 pages)
GEOTECHNICAL REPORT	(65 pages)
AMERICAN RECOVERY AND REINVESTMENT ACT SIGN	(5 pages)
EASTERN AVE. OVER KENILWORTH AVE., N.E. WORKZONE TRANSPORTATION MANAGEMENT PLAN	(81 pages)
INSPECTION REPORT – REHABILITATION OF EASTERN AVENUE PUMPING STATION	(20 pages)
LEAD AND ASBESTOS SURVEY FOR THE EASTERN AVENUE PUMP STATION	(15 pages)
CSXT CONSTRUCTION REQUIREMENTS	(8 pages)

The "STANDARD SPECIFICATIONS FOR HIGHWAYS AND STRUCTURES, 2005 Revised 2007" and amendments thereto, and the "REQUIRED CONTRACT PROVISIONS FEDERAL-AID CONSTRUCTION CONTRACTS" (FHWA-1273) are incorporated herein by reference and are made a part of the requirements of this contract.

INSERT the following S.P.'s:

62. SIGN LIGHTING AND COMPLETE SYSTEM, Item 618 825

Sign Lighting System- Sign lighting system shall also conform to the Requirements of the drawings.

SIGN LIGHTING LUMINAIRE- The totally enclosed and weatherproof luminaire shall operate one 100 Watt HPS Lamp at 120 Volt, 60 Hertz power source. The luminaire shall include a completely prewired integral ballast and optical assembly the shall provide and IES distribution of Type IV. The luminaire shall be UL Listed SUITABLE FOR WET LOCATIONS.

The luminaire shall include a die-cast aluminum housing, ballast, prewired terminal board, sealed and filtered optical assembly and removable die-cast top-hinged door glass with sealed-in refractor. Die-cast aluminum surfaces shall have an electrocoat gray paint finish. There shall be ¾ inch threaded conduit entrances (with screw-in plugs) for feed wiring on the top and sides of the housing. All hardware shall be corrosion-resistant.

All electrical components shall be mounted on the housing. The ballast shall be prewired to the lamp socket and terminal board. There shall be a plug-in ignitor for use with HPS lamps. The luminaire shall contain a Magnetic Regulator ballast. The ballast shall be in full compliance with lamp-ballast specifications available from the lamp manufacturer at the time of manufacture. The ballast shall reliably start and operate the lamp in ambient temperatures down the –40 F.

The optical assembly shall be sealed, filtered, a formed aluminum reflector and a flat, clear flat glass closure with gasketing around the perimeter of the housing. The optical assembly shall contain a mogul base lamp socket.

LAMPS- Shall be 100 Watt High Pressure Sodium Vapor

Disconnect switches shall be non-fused and shall be NEMA-4 type HD. Switch mechanism shall be quick made, quick break type with visible blades. The switch shall have a NEMA-4 sheet metal enclosure with heavy duty operating handle, cover interlock and provision for padlocking the cover in the closed position and the operating handle in the open or closed position. Switch shall be rated at 30 Amps.

Photoelectric control units shall be installed at the top of the sign as directed/approved by the Engineer. The photo control shall be a single pole, twist lock and rated for 3000 Watts. The receptacle shall be suitable for use of the twist lock photo control and also be rated at 3000 Watts. Units shall be installed in strict accordance with the manufacturer's guide for materials used; location shall be approved by the Engineer.

Conduit work and conductors to the sign structure and terminating at sign bases shall be installed and connected to feeder lines at the manhole as indicated in the plans.

MEASURE AND PAYMENT- The unit of measure for SIGN LIGHTING AND COMPLETE SYSTEM shall be LUMP SUM. Payment shall include installation of the complete lighting system shall shown on the plans including luminaries, photocell, grounding, conduits, hangers and straps, other mount arrangements, conductors, junction boxes, cables splice kits testing and adjustments. The lump sum price shall by full compensation for all materials, labor, equipment, tools and incidentals needed to complete the work

63. CAP INLET, Item 300 004

(A) **GENERAL** - Work consists of capping existing curb inlet during construction for proper maintenance of traffic. The existing frame / cover and inlet tops shall be protected (as directed by the engineer). The contractor shall provide complete detail and work sequence for Engineer's approval prior to start of work.

(B) **MEASURE** - The unit of measure for **Cap inlet** will be **Each** and comprises of all the work described above including all labor, equipment, tools, materials and incidentals necessary to complete the work as specified herein.

(C) **PAYMENT** - The unit of pavement for **Cap inlet** will be **Each** and includes all labor, equipment, tools, materials and incidentals necessary to complete the work as specified herein.

64. PLANTER SOIL (GROWING MEDIA), Item 610 100

This special provision supplements and modifies 823.01, TOPSOIL, of the standard specifications.

ENGINEERED GROWING MEDIUM

1. **DESCRIPTION.** This growing medium shall be an engineered mix of well draining sandy loam, 1/4 topsoil, 1/4 decomposed compost or organic matter and 1/2 inorganic material. Natural soils should not be used. The soil shall be a uniform mix, free of stones, stumps, roots, or other similar objects larger than one-half inches. No other materials or substances shall be mixed or dumped within the growing medium that may be harmful to plant growth, or prove a hindrance to the plating or maintenance operations. The growing medium shall be free of Bermuda Grass, Quackgrass, Jonson Grass, Mugwort, Nutsedge, Poison Ivy, Canadian Thistle, or other noxious weeds as set forth in the Federal Seed Act. The growing media shall have a pH range of 5.5 – 6.5.

2. **TOPSOIL.** Topsoil as specified in 823.01.

3. **COMPOST.** Compost shall be organic material of peat humus meeting the requirements of 823.06 (B) and/or leaf mulch.

4. **INORGANIC MATERIAL.** Inorganic material shall be equal parts of a highly porosity natural mineral element such as expanded slate, shale, extruded clay, etc., and coarse sand. The highly porosity natural mineral element shall provide aeration and prevents total compaction of organic matter over time and acts as a good draining medium. Sand shall be clean and free of deleterious materials. Sand shall meet AASHTO M-t or ASTM C-33 at a size ranging from 1.0 – 0.5 mm.

5. **Air.** Air content at maximum water capacity shall be 10% at 35%.

6. **CONSTRUCTION.** The Contractor shall submit a growing media sample to the CO at least 30 days prior to the proposed installation:

   - The growing medium must be blended off-site.
   - Stockpiles shall be certified to demonstrate that the medium meets this specification prior to delivery on site.
   - All growing media must be approved by the CO before delivery to the job site. Material not meeting requirements of this specification may be rejected on or after delivery.
   - Do not deliver or place the growing medium in frozen, wet or muddy conditions.
   - Do not place materials that are excessively moist.
   - The Growing medium must be blended uniformly.
   - After placement, preset the medium by thoroughly watering the entire planting area. Fill settled low areas with the medium and repeat the compaction and filling process until settlement ceases.
   - Plant as soon as possible to avoid soil erosion form wind and unnecessary exposure to elements.

7. **MEASUREMENT AND PAYMENT.** The unit of measure for the growing media will be the job. Placing growing media will be measured and paid for at the contract lump sum price. The payment will be full compensation for the preparation of surfaces, loading, hauling, placing, supplying and spreading growing media and media amendments, and for all material, labor, equipment, tools, and incidentals necessary to complete the work.

65. ABANDON HANDBOX, Item 617 029

This special provision supplements and modifies 617 of the standard specifications.

GENERAL-The Contractor shall furnish all labor, materials and equipment necessary to abandon a District-owned handbox as shown on the contract plans or as directed by the Engineer. The contractor shall completely remove the handbox including the cover. All electrical cables shall be cut and removed and the electrical conduits shall be sealed with

cement. The excavation shall be backfilled in 6 inch layers and compacted. All material removed shall become the properly of the Contractor and be disposed of off site at no addition cost to the District. Included within this pay item is the temporary patching of the area where the manhole was removed maintenance of the patch until final repairs have been made.

MEASURE AND PAYMENT-The unit of measure for **ABANDON HANDBOX** will be for **EACH** handbox removed. Payment will be made at the contract unit price per each handbox removed, and payment will include all labor, equipment, tools, materials, temporary patching, maintenance of the cut until the permanent repairs are made and all incidentals necessary to complete the work as specified herein.

66. FURNISH AND INSTALL INDUCTIVE LOOP DETECTOR, Item 617 002

This special provision supplements and modifies 617 of the standard specifications.

Work under this pay item shall meet the requirements of 617.14.

67. RELOCATE TEMPORARY PORTABLE CONCRETE BASE NOT FURNISHED BY THE CONTRACTOR, Item 618 045

This special provision supplements and modifies 618 of the standard specifications.

GENERAL- The Contractor shall furnish all labor, materials and equipment necessary to relocate the temporary portable concrete base not supplied by the Contractor as called for in the project plans or as directed by the Project Engineer. The Contractor shall use care when relocating the temporary base, so as not to damage the pole, transformer base, traffic and pedestrian signal heads and cables. All damage due to Contractor negligence will be repaired and or replaced by the Contractor at not additional cost to the District. When moving the bases care must be taken so as not to endanger pedestrian and vehicular traffic. The Contractor after relocating the temporary base shall check to make sure the traffic and pedestrian signal heads are facing in the correct direction for the new traffic operation. The traffic signal cables from the temporary base to the old foundation shall be protected from damage by pedestrian and vehicular traffic. All methods use for protection of the cables shall be approved by the Project Engineer.

MEASURE AND PAYMENT – The unit of measure for **RELOCATE TEMPORARY PORTABLE CONCRETE BASE NOT FURNISHED BY THE CONTRACTOR will** be per **EACH**. Payment will be made at the contract unit price per each temporary portable base relocated, and will include all labor, equipment, tools, materials, and all incidentals necessary to complete.

DELETE Section 15445 and 15446 from the WASA Specifications Appendix (which total a deletion of 33 pages) and **INSERT** with the attached EIGHT (8) pages that replaces the Table of Contents and Section 15445.

EASTERN AVENUE BRIDGE – RESPONSES TO PRE-BID QUESTIONS

- **1.** Bid Item 0020/617-043, TEMP PORT CONC BASE FOR 28 FOOT PENDANT POLE (Spec Pg 79, Para 11), (Dwg 191-195).This item provides for a temporary base, but there is no bid item nor specifications provided for a 28 Foot Steel Pole. Where is the requirement for the pole?

  The contractor shall reuse the existing pole that currently has the camera mounted on it.

- **2.** Bid Item 0040 / 617-131, FURNISH AND INSTALL CCTV CAMERA SYSTEM (Spec Pg 80-81, Para 13), (Dwg 191-195). This item provides for a new camera, but the specifications and details do not mention what is wanted. Does the camera have pan-tilt-zoom capabilities? Does it have heating and cooling? Is it weather proof and vandal resistant?

  The following are the material specifications for the camera:

  Material Required for CCTV Camera Installation

  1ea Ultrak SmartScan KD6i WeatherDome Camera Yoke (firmware part # 519625-1980) or approved equivalent
  1ea Ultrak SmartScan KD6i WeatherDome Camera Top or approved equivalent
  1ea Ultrak SmartScan KD6i WeatherDome Camera Bottom or approved equivalent

  1ea Ultrak SmartScan Power Supply and video/data interface with surge suppression or approved equivalent

  1ea Ultrak Composite Cable or approved equivalent

  1ea ADC 310F-3 Megabit modem or approved equivalent
  1ea ADC 320F-3 Megabit modem or approved equivalent

  1ea Core Tec VCX-2400-E MPEG-2 encoder or approved equivalent
  1ea Core Tec VCX-2400-D-R decoder card or approved equivalent

  tbd RG-6 flooded coax cable (West Penn Wire # 6325 or approved equivalent)
  tbd 3-pair 19 gauge solid distribution cable (Type IMSA 60-6 or RUS Spec. PE-54 BWFG)
  tbd IMSA 19-1, 7 conductor, 14 gauge, stranded cable

  2ea 11/2" cast iron hub plate (Pelco SE4124 or approved equivalent)

2ea	*Rubber grommet (sized to fit hole drilled into pole for cable protection)*
1ea	*11/2" x 9" steel nipple*
2ea	*11/2" x 2" steel nipple*
1ea	*11/2" bushing*
2ea	*11/2" lock nut*
4ea	*5/16-24 x 1/4" stainless steel set screw*
4ea	*#10-32 x 1/2" stainless steel screw (supplied with power supply)*
1ea	*11/2" malleable iron LB threaded conduit body (drilled and tapped for 5/16-24 set screws)*
1ea	*11/2" malleable iron LR or LL threaded conduit body (drilled and tapped for 5/16-24 set screws)*
2ea	*neoprene gasket*
2ea	*galvanized conduit body cover (11/2")*
30'	*3/4" stainless steel metal strap banding (Band-It C206 or approved equivalent)*
6ea	*3/4" stainless steel metal strap banding buckles (Band-It C256 or approved equivalent)*
2ea	*universal channel clamp (Band-It SX0220 or approved equivalent)*
2ea	*medium extrusion 81/2" long (Band-It SX0073 or approved equivalent)*
1ea	*Kellum Grip (Hubbell part # 02201037 or approved equivalent)*
2ea	*3M 4460-D shield connector or approved equivalent*
1ea	*BNC connector (West Penn Wire # CN-BM73-2 or approved equivalent)*
2ea	*BNC connector (West Penn Wire # CN-BM73-5 or approved equivalent)*
1ea	*RJ-11 jack (Suttle # 625A2-4-50 or approved equivalent)*
1ea	*RJ-45 jack (Suttle # 625A28NK50 or approved equivalent)*
1ea	*McCain Accessory Power Tap or approved equivalent*
1ea	*Tripp-Lite Power Strip (Model #PDU1215) or approved equivalent*
1ea	*RJ-11 telephone cord (comes with Modem)*
2ea	*3' Category 5 straight patchcord*
1ea	*5/16-18x11/2" bolt*
1ea	*5/16x11/4" fender washer*
1ea	*5/16 K-Lock nut*
4'-12'	*3/32 Stainless Steel Safety Cable (length determined at installation)*
2ea	*splicing sleeves for safety cable*
1ea	*Hubbell HBL5965VY plug for camera cable or approved equivalent*

Miscellaneous Hardware should include:

10-32x1" screws
Spade connectors
Butt connectors
Silicone sealant
Battleship gray spray paint

Following items may be needed if repeater stations are required

tbd	*Tripp-Lite Power Strip (Model #PDU1215) or approved equivalent*

May be needed for TMC Video Circuit Expansion

1ea Tripp-Lite Power Strip (Model #PDU1215) or approved equivalent

4 ML 624 Actelis Network ML 624, Supports 4 pairs, 4x10/100 Ethernet ports or approved equivalent

*4 ML688 Actelis Network Copper Add-Drop Multiplexer (CADM) 4x10/100M copper Ethernet ports and a 100Base-FX optical (orDS3/E3)SFP*port ML68888 or approved equivalent*

- **3.** Bid Item 2150 / 621-801, COMMUNICATION WEB BASED (Spec Pg 9), (Appendix WASA electrical specs), (Dwgs 239-242). No specifications are given for this; what is it?

  The "Communication Web Based" bid item has been removed in this addendum.

- **4.** Bid Item 2150 / 621-800, REHABILITATE PUMPING STATION
  Bid Item 2170 / 621-802, UPGRADED ELECTRICAL SERVICE
  (Spec Pg 9), (Appendix WASA electrical specs), (Dwgs 239-242).
  What portion of the electrical work in the Pumping Station is in each bid item?

  The "Rehabilitate Pumping Station" bid item is the removal and replacement of the pumps, controls, HVAC, and new electrical power and lighting within the existing pumping station. The work requires that the station will always have at least one operational pump in service at all times.

  The "Upgraded Electrical Service" bid item covers the upgrade of the electrical service by PEPCO. The contractor will be responsible for submitting the upgraded service request to and coordinating with PEPCO.

- **5.** Bid Item 2460 / 713-002, STEEL SIGN STRUCTURE, (Dwg 32 & 35)
  The details for Sign Structure C-1 suggest that there should be luminaries with these signs (Dwg 35, Overhead Signs, Note 4), but no lighting or electrical is shown in the design. Was this matter an oversight?

  Lighting and electrical plans, details and specifications for sign structure C-1 are included in this addendum.

- **6.** (Dwgs 187 & 188) There is no bid item for the ¾" conduit serving the wall mounted light below the bridge. Should these conduits be part of the bid for the wall mounted luminaires and junction boxes?

  A bid item for the ¾" conduit has been added in this addendum.

- **7.** Should rigid steel conduit routed exposed have a galvanized coating or should they be PVC coated?

  The rigid steel conduit shall be galvanized.

- **8.** The existing typical sections on sheet TS-01 show PCC Curb on Kenilworth Avenue, SB & NB Service Roads, and Eastern Avenue. Additionally the proposed sections for the same on TS-02 show new PCC curb. Bid items 0550 and 0560 in the pay item schedule refer to new 8" x 12" granite curb. Please clarify whether the new curbs shown in the typical sections are to be PCC as shown by plan or granite curb as listed in the pay item schedule?

  The new curb shall be granite and a revised sheet TS-02 is included in this addendum.

- **9.** Page 4 in the Special Provisions under 4. Contract Type, states that the contract shall be a fixed price contract. The Bid form and bid item list show quantities and unit prices for payment. Please clarify the type of contract and whether or not this is a lump sum or a unit price contract based on the quantities and bid items shown in the bid schedule?

  This is a fixed price contract. The unit prices speak to how the work will be measured and paid for.

- **10.** Due to the complexities of obtaining quotes and finding manufacturers experience in this type of precast operation please consider a delay in the receipt of bids of at least 1 week to 10 days.

  The bid opening has been extended until 7/20/2009.

- **11.** Item #2290 PCC Footing for Steel Sign Structure has a quantity of 16CY. No detail is provided. Please advise.

  Refer to dwg no. SN 06, sheet no. 35, for details.

- **12.** Is the Median Barrier quantity part of item #2300 PCC Pier-Abutment-Wall? Please advise.

  The median barrier quantity is part of item #2300 PCC Pier-Abutment-Wall.

- **13.** Item #0370 Pavement Reinforcing Fabric for Crack Repair has units of Cubic Feet in the Pay Items. However the special provisions states that this item is measured in Linear Feet. Please clarify.

  The unit of measurement should be linear feet. The special provision is correct.

- **14.** Item #0380 Pavement Reinforcing Fabric for Asphalt Overlay has units of Cubic Yards in the Pay Items. However the special provisions states that this item is measured in Square Feet. Please clarify.

  The unit of measurement should be square feet. The special provision is correct.

- **15.** What does item #2300 PCC Pier-Abutment-Wall consist of? If the precast pier concrete is included in item #2300 it would be preferable if it could be separated and have units of "Lump Sum" or "Each". Please advise.

  Item #2300 PCC Pier-Abutment-Wall consists of the cast-in-place (c.i.p.) abutment modifications, c.i.p. pier footing, c.i.p. pier portions, c.i.p. median barrier along Kenilworth Avenue and the prefabricated pier concrete.

- **16.** What does Item #2310 PCC Superstructure consist of?

  Item #2310 PCC Superstructure consists of the normal weight concrete used above the lightweight concrete deck (parapets, planter barriers, median, etc.)

- **17.** What does item #0150 Demolition consist of?

  Item #0150 Demolition consists of removal of the existing structure. The bid item has been revised to be lump sum in this addendum.

- **18.** Bid items 370 and 380 which are pavement reinforcing fabric for crack repair and asphalt overlay respectively appear to have the wrong units of measure. The basis of payment states they should be by the LF and SF. Please clarify.

  The special provisions are correct. The units for the bid items have been modified with this addendum.

- **19.** Special Provisions 2050, 2076 and 2085 details lead paint, PCB and asbestos abatement. Would you please provide quantities of the work that has to be abated or consider an allowance for this work?

  The Lead and Asbestos Survey for the Eastern Avenue Pump Station is included in this addendum for use by the contractor in determining the quantities for abatement.

- **20.** Is the abatement work incidental to demolition (item 80)?

  The abatement work shall be considered incidental to demolition (item 0080).

- **21.** Is this abatement required for the entire pump station or only new work?

  Refer to the Lead and Asbestos Survey for the Eastern Avenue Pump Station which is included in this addendum and special provisions 02050, 02085, 02076 and 13283 for determining the abatement level required for the pump station.

- **22.** Plan sheet PS-S-1 describes a pre-alteration assessment that depicts the type, location and extent of hazardous materials to be removed at the pump station. Would you please forward this report or clarify where in the contract documents this report is located?

  The Lead and Asbestos Survey for the Eastern Avenue Pump Station is included in this addendum.

- **23.** The item for VMS Signs (Item 1120) appears to be in error on the Eastern Ave. job.

  The unit for item 1120 has been revised to HOURS (HR) in this addendum.

- **24.** Drawing page 210 shows the run of conduit from M.H. M12 to pole P3 as existing (per legend, page 209). The conduit summary (page 214) indicates this run is new. which is correct? If, in fact, it is new, why is it listed on the summary as 6-4" conduits and 2-2" conduits?

  The conduit run between manhole M12 and pole P3 is 2-4" conduits. The necessary changes to the plans and conduit summery have been made in this addendum.

- **25.** Drawing page 210 indicates the conduit between M.H. M12 and the handbox adjacent to TC3 to be a 2" conduit. This is not acceptable for the installation of 25 pair communication cable. The conduit run is not even listed in the conduit summary table.

  The plans and conduit summery table have been revised and are included in this addendum.

- **26.** Drawing page 197 Removal note #1 states to remove the existing overhead 12 pair communication cable. There is no bid item addressing this work. Should the cost of the removal be incorporated into the installation of 25 pair communication bid item?

  Yes, the cost of removal should be incorporated into the installation of 25 pair communication bid item.

- **27.** Does DDOT want an expansion on both ends of the conduit running through the planter box, or just one, as shown on the prints? Additionally, might it be a better installation in the planter box if PVC coated rigid conduit were used, instead of painting GRS with asphalt paint, which would delay the project while it dried? What kind of strap does DDOT want on this run of conduit (every twenty feet)?

  Two expansion fittings, one at each end, are needed for each 4 inch conduit. The painting of the conduit will not hold up the project. The straps will be one hole, malleable iron, hot dipped galvanized at 20' maximum spacing.

- **28.** There does not appear to be a bid item to cover the installation of the overhead communication cable between cabinet TC-2 and cabinet TC-4. Please clarify this situation, as overhead cable is not only different than underground, the installation is completely different.

  A pay item for the installation of the overhead communication cable has been added and the quantity of the underground cable has been changed. These revisions are included in this addendum.

- **29.** The unit or quantity for item #1120 is not correct. Please rectify.

  The unit for item 1120 has been revised to HOURS (HR) in this addendum.

- **30.** Please verify the quantity for item #0440 PCC directional island.

  Item #0440 accounts for the directional island outside the limits of the structure while item #2310 includes the portion of the directional island on the structure.

- **31.** Is the lightweight concrete H1 or H2?

  Either H1 or H2 lightweight concrete may be used as long as the additional requirements stated in the general notes (compressive strength, low permeability) are met.

- **32.** Contract Drawing PS□S□1□ Statement is made "A Pre□Alteration Assessment has been conducted for asbestos containing materials (ACMS) and Lead Based Paint (LBP)…". Please provide bidders with a copy of this document so that an estimate can be prepared for the required remediation.

  The Lead and Asbestos Survey for the Eastern Avenue Pump Station is included in this addendum.

- **33.** Design Code Note on Drawing PS□S□1 : No mention is made of construction having to meet AREMA Standards. If the more stringent AREMA Code is invoked, assumption is made that all additional costs to meet these standards will be paid for by Change Order. Do you concur?

  AREMA Standards do not apply to this project.

- **34.** Assumption is made that no design, material & equipment submittals for this project are subject to railroad review; do you concur?

  Assume that CSXT review of material delivery and removal procedure may be required.

- **35.** Assumption is made no railroad Liability Insurance is required for this project; do you concur?

  Assume that railroad liability insurance is required. See the additional informational provided in the specifications appendix as part of this addendum.

- **36.** Is there a RR Permit issued for this project?

  A CSXT permit has not been issued and there is no anticipated major impact to CSXT right-of-way. Construction coordination with CSXT will be required. See the additional informational provided in the specifications appendix as part of this addendum.

- **37.** Mechanical By Pass Pumping Note 1 on Drawing MED□1 – Assumption is made the word "during" should replace the words "in lieu of". Do you concur?

  Bypass pumping shall be used in one existing pump cannot be maintained during pump station rehabilitation.

- **38.** Detail 2 on Drawing MED□1 – Insufficient space exists for the placement of 3 each by pass pumps. Please provide plan view of these 3 by pass pumps and piping

  Two temporary pumps sized at 2,000 GPM @ 30TDH shall be used in lieu of three as noted on the drawing.

- **39.** Please provide design criteria for the 3 By Pass Pumps.

  Two temporary pumps sized at 2,000 GPM @ 30TDH shall be used in lieu of three as noted on the drawing.

- **40.** Can the South Sidewalk along Eastern Ave in front of the Pump Station be closed during the duration of the work?

  It is acceptable to close the south sidewalk during any of the MOT phases as long as pedestrian detour is provided to the north sidewalk.

- **41.** Section BB of Contract Drawing MP□1 – Can the two existing wall thimbles between the Pump Suction Inlets and the 10" Motorized Knife Gate Valves remain in place? If not please provide structural detail as to the wall hole demolition and repair to install new wall thimbles.

  No, the existing wall thimbles are in the wrong location to allow the new pump design. The contractor may submit their preferred method of demolition and repair to the engineer for review and acceptance.

- **42.** Where and what size is (are) the influent pipe(s) located within the Wet Well of the Pumping Station?

  The influent pipes are 18" inner diameter. See the as-built plans in the inspection report in the revised specifications included with this addendum.

- **43.** During the course of the Electrical Installation, complete shutdown of the power to the existing pumps will be required, what is the required sizing of the By Pass Pumping Operations when both pumps are out of service due to loss of power supply?

  The required power information shall be obtained from the bypass pump vendor selected by the contractor.

- **44.** Assumption is made existing Southside Underpass Sidewalk Platform can be used for staging power generation equipment during bypass pumping operations. Do you concur? If not please provide location of designated staging areas for this equipment. (Please note, existing Power Supply within Pump Station is either: inadequate, incompatible, not readily upgradeable or inaccessible for use as a power source for required heavy load temporary pumping equipment.)

  It is acceptable to use the south sidewalk for staging power generation equipment during bypass pumping operations.

- **45.** Specification 15010 1.3.D.2 (Page 15010□2)_□ Statement is made "At no time shall the pumping station by (Typo□be?) without the operation of a single pump". Assumption is made the phrase "single pump" includes not only the existing pumps but also the use of temporary by pass pumps. Do you concur? Please keep in mind both existing pumps will need to be shut down to install the new 18"X18"X10" Tee on the Discharge Line (See Sect 2 on Drawing MED□1) as well as the period required to transfer electrical service to the first installed new pump.

  Correction of the word from "by" to "be". The installation of the tee shall be sequenced and timed to minimize shut down of temporary bypass pumps or existing pump kept in service. This shut down duration will require approval by the engineer before any work is done. The bypass pumps or existing pump shall be operational while electrical service is brought to the first installed pump.

- **46.** Specification 15010 1.7.A.1 (Page 15010□2) – Statement is made "Do not close or obstruct existing walkways, or other occupied or used facilities without written permission from Owner and authorities having jurisdiction". Since the District is the Owner, assumption is made permission will be granted to close the South Side Sidewalk of Eastern Ave. in the vicinity of the Pump Stations to keep the public away from the work area. Pedestrian traffic will be diverted to the North Side Sidewalk will be used for the maintenance of pedestrian traffic. Do you concur?

  It is acceptable to close the south sidewalk during any of the MOT phases as long as pedestrian detour is provided to the north sidewalk.

- **47.** Pump Schedule (Contract Drawing MP□1): Contrary to normal interpretation, assumption is made the pumps specified on the Contract Drawing Schedule take precedence over the written specifications. This assumption would render Specification Sections 15445□ Sewage Pumps and Section 15446□ Sump Pump as non applicable. Do you concur? If not please define the following:
  A. The appropriate specification section for use on the pumps (e.g.□ Section 15446 2.3 Submersible Sump Pumps since the pumps are labeled as dry pit submersible sump pump on the schedule).
  B. List of acceptable manufacturers.
  C. Required choices of the options listed in bold.

  Specification section 15445 has been revised and is included with this addendum. Specification section 15446 is removed from the specifications.

- **48.** Work Zone Transportation Maintenance Plan: The work zone plan does not address the required closure of Eastbound Eastern Ave in the vicinity of the pump station to allow construction equipment to perform delivery and installation of heavy structural, mechanical and electrical equipment. Assumption is made this closure will be allowed during normal work hours. Do you concur?

  It is acceptable to close the right eastbound lane of Eastern Avenue in the vicinity of the pump station after the Olive Street intersection during any of the MOT phases. The closure can occur between 9:30 AM to 3:30 PM from Monday to Friday. The MOT setup shall be as per DDOT Std. Dwg. 616.09.

- **49.** Item #700002 – Asphalt Overlay for Superstructure is paid in CY; it is more conventional for asphalt to be paid in tons, please consider changing the pay unit.

  The pay unit for item #700002 will remain as is.

- **50.** SP 54 appears to be a specification for an asphaltic/elastomeric waterproofing system that would be utilized for the planter area; if that is the intent, please provide a pay item for this work.

  Special provision no. 54 is for the waterproofing material applied to the top of the lightweight concrete deck before placing the asphalt overlay and in the planters. Item no. 0870, 615991 Membrane Waterproofing Special Item -SY- 795001 MEMBRANE WATERPROOFING, is the pay item for this work.

- **51.** Please provide a pay item for the planter soil, with details for: lightweight features, drainage stone, etc.

  A pay item has been added and details are provided in a special provision included with this addendum.

- **52.** Please provide an asphalt milling item.

  An asphalt milling item has been added as part of this addendum.

- **53.** Please confirm that item #205009□Demolition is intended for the bridge demolition and also provide details/information for work items contributing to the 2200 CY for item # 205008□Demolition.

  Item #0150, 205008 Demolition, consists of removal of the existing structure. The bid item has been revised to be lump sum in this addendum.

- **54.** Please clarify pay units for SP 25 and SP 26 with respect to items #403003 and #403004 (CF/CY vs LF).

  The pay units given in special provision nos. 25 and 26 are correct the units for the bid items have been revised in this addendum

- **55.** Please provide a common□excavation pay item for constructing temporary ramps and lanes.

  A common excavation item and quantity was shown on dwg. no. QN-01, Summary of Quantities - 1. A pay item has been added to the schedule of items and is included with this addendum.

- **56.** Please consider extending the deadline for questions until bidders have reviewed responses to the initial questions from all bidders.

  The bid opening has been extended until 7/20/2009.

- **57.** (Bid Item 2170 / 621-802, UPGRADED ELECTRICAL SERVICE (Dwg E-1 / sht 242) & (Dwg MED-1 / sht 239, Det 3, Note 1) The drawings imply that a new PEPCO Service is to be provided to the Pump Room at the Eastern Avenue Railroad Underpass, providing a 4"Conduit to a PEPCO Transformer. There is no detail given to locate the transformer pad, the size of the service, or the routing of the conduit between the Pump Room and the Transformer. Could this information be provided to the bidders?

  The new transformer pad shall be located as close as possible to the existing transformer. The size of the service shall be based on the electrical power plans and the bypass equipment used by the contractor.

BID FORMS AND PROPOSAL SECTION:

DELETE the Pay Item Schedule Pages 1 through 28 in its entirety and **REPLACE** with the new Pay Item Schedule Pages 1-R through 29-R attached to this addendum.

DC WATER AND SEWER AUTHORITY OFFICE OF ENGINEERING SERVICES

SPECIFICATION INDEX

RECONSTRUCTION OF EASTERN AVENUE BRIDGE OVER KENILWORTH AVENUE, N.E.
&
REHABILITATION OF EASTERN AVENUE PUMPING STATION

SECTION	TITLE	No of Pages
01026	Measurement and Payment	3
01546	Safety & Health	9
02050	Demolition	2
02076	PCB Mercury	9
02085	Asbestos Abatement Procedures	9
02220	Trench Excavation and Backfill	14
02705	Sewer Manholes	6
02720	Catch Basin and Connecting Pipe	4
02730	Pipe Sewer	8
03100	Concrete Formwork	4
03200	Reinforcing Steel	3
03250	Concrete Accessories	3
03300	Cast-In-Place Concrete	21
03301	Concrete Repair	8
03316	Concrete Collar (Reinforced)	2
03600	Non-Shrink Grout	3

SECTION	TITLE	No of Pages
05120	Structural Steel	9
05530	Gratings	4
08110	Steel Doors	4
08710	Door Hardware	7
13283	Removal/Disposal Lead Based Paint	13
15010	Mechanical Summary	3
15052	Common Work Results for Plumbing	15
15057	Common Motor Reqs. for Plumbing Equipment	3
15061	Hangers & Supports for Plumbing Equipment	14
15076	Identification for Plumbing & Piping Equip.	6
15111	General Duty Valves for Plumbing Piping	51
15126	Meters and Gages for Plumbing Piping	10
15160	Storm Drain Piping	16
1 15445	Dry-Pit Submersible Pumps and Controllers	6
~~15445~~	~~Sewage Pumps~~	~~20~~
~~15446~~	~~Sump Pumps~~	~~13~~
15755	Dehumidification Units	17
16010	Electrical Summary	3
16051	Common Work Results for Electrical	3
16055	Overcurrent Protective Device Coordination	6
16060	Grounding and Bonding	4
16073	Hangers & Supports for Electrical Systems	6
16075	Electrical Identification	4
16120	Condutors and Cables	8
16123	Control – Voltage Electrical Power Cables	13
16130	Raceways & Boxes	16

SECTION 15445 - DRY-PIT SUBMERSIBLE PUMPS and CONTROLLERS

PART 1. GENERAL

1.01 This specification includes the supply of (2) base-mounted, dry-pit submersible solids-handling pumping unit(s), UL Listed for explosion proof Class I, Division 1, Groups C and D hazardous locations. The pumps Pump rotation shall be as shown on the drawings.

1.02 QUALITY ASSURANCE

A. All pumping equipment furnished under this Section shall be of a design and manufacture that has been used in similar applications, and it shall be demonstrated to the satisfaction of the Owner that the quality is equal to equipment made by that manufacturer.
B. Unit responsibility. Pumps, complete with motor and all other specified accessories and appurtenances, shall be furnished by the pump manufacturer to insure compatibility and integrity of the individual components, and provide the specified warranty for all components.
C. The base-mounted, dry-pit submersible solids-handling pumps and motors specified in this section shall be furnished by and be the product of one manufacturer.
D. Pumps are to be engineered and manufactured under a written Quality Assurance program. The Quality Assurance program is to be in effect for at least ten years, to include a written record of periodic internal and external audits to confirm compliance with such program.

1.03 PERFORMANCE

A. The pumps shall be designed for continuous operation and will be operated continuously under normal service.
B. OPERATION CRITERIA

	Flow (GPM)	TDH (ft.)	Max. Pump Speed (RPM)	Max. Solids Passage	Max. Shutoff Head (ft.)	NPSHR @ Rated Condition (ft.)
Design Condition	4000	30	705	6”	66	11.3
Secondary Condition						

PART 2, PRODUCTS

2.01 PUMPS

A. Manufacturer

1. The Fairbanks Morse 10" Model 5435WD was used as the basis of design.
2. Available Manufactures: Subject to compliance with requirements, manufacturers offering products that may be incorporated into the work include, but are not limited to, Yoemans Chicago, Flygt, Deming and Hydromatic. If the Contractor chooses to use another pump manufacturer then any changes, such as piping arrangements, physical layout, or additional expenses, etc. shall be the Contractors responsibility.
3. Manufacturer shall have installations of like or similar application with a minimum of 5 years service for a pump of this size.

B. Design

1. Rotation
   a. The pump will be (clockwise)(counterclockwise) rotation when viewed from the driver end looking at the pump.
2. Impeller
   a. Impeller shall be of the balanced non-clogging type matched to its constant velocity equalizing pressure volute and be made of close-grained cast iron conforming to ASTM A48 CL30. It shall be of one-piece construction, single suction, enclosed two-vane, radial flow design with well-rounded leading vanes and then tapered toward the trailing edge for a circular flow pattern to prevent the accumulation of solids and stringy material.
   b. The clearance between the impeller outside diameter and cutwater shall be capable of passing a 6" sphere.
   c. The impeller is to be balanced and secured to the shaft by means of a bolt, washer, and key. The arrangement shall be such that the impeller cannot be loosened from torque in either forward or reverse rotation.
   d. Wiper vanes on the back impeller shroud are not allowed.
   e. Impeller shall be trimmed to specifically meet the conditions of operation.
3. Volute/Casing
   a. Volute is to be cast with extra thick walls made of close-grained cast iron conforming to ASTM A48, Class 30. It is to be one-piece, constant velocity equalizing pressure with smooth fluid passages large enough to pass any size solid that can pass through the impeller.

b. The volute shall be side flanged tangential discharge and be capable of rotation in 45-degree increments to accommodate piping orientation. Volute discharge shall be minimum 10" diameter as measured on the inside diameter of the discharge flange opening. Diffusion vanes are not permitted.
c. The volute shall be furnished with large cleanout openings located at the impeller centerline, to allow access to the impeller.
d. The casing shall be designed to permit the removal of the rotating assembly without disturbing the suction or discharge piping. The casing shall be hydrostatically tested to 1.5 times the design head or 1.25 times the shutoff head whichever is greater.

4. Wear Rings
   a. Wear rings shall be provided on both the impeller and fronthead so that clearances can be maintained throughout the life of the rings and minimize recirculation.
   b. Impeller wear rings shall be of the axial- or face-type.
   c. Fronthead wear rings shall be of the axial- or face-type.
   d. Wear rings shall be attached to the impeller and fronthead using an interference fit and Loctite.
   e. Wear rings shall be stainless steel, with the impeller wear ring approximately 50 Brinell softer than the fronthead wear ring.
   f. Wear ring clearance adjustment shall be attained through impeller adjustment shims.
5. Base and Suction Elbow
   a. A rugged, heavy-duty fabricated steel base with openings large enough to permit access to the suction elbow and cleanout, bolted directly to the volute, shall be provided. The base shall be designed to support the assembled weight of the pump and motor.
   b. A cast iron suction elbow with ½" gauge connection, contoured handhole cleanout, and a 125 lb. flat-faced flange conforming to ANSI drilling shall be furnished.

6. Motor

   a. Pumps shall be driven by completely sealed, electric submersible squirrel cage induction motors with a maximum NEMA nameplate rating of 40 HP, 1.15 service factor, 705RPM, 460 volts, 3 -phase, 60 Hertz. The motor nameplate horsepower rating should exceed the brake horsepower requirements of the specified head and capacity conditions.
   b. Submersible equipment shall be UL Listed for Class I, Division 1, Groups C and D explosion-proof hazardous locations as defined by the National Electric Code. All electrical parts shall be housed in an

air-filled cast iron, watertight enclosure which is sealed by the use of O-rings and rabbeted joints with extra large overlaps.

c. The stator winding and lead shall be insulated with moisture-resistant Class F insulation for continuous duty in 40 degree C ambient. The motor shall be designed for continuous duty capable of ten (1) starts per hour. Automatic reset, normally closed thermal overloads shall be imbedded in the motor windings to provide overheating protection. Motor winding thermostats must be connected to an electric controller per local and state codes and the National Electric Code.

d. Motor shaft shall be one-piece, 416 stainless steel. Carbon steel shafts or shaft sleeves are not acceptable. Rotor is to be dynamically balanced to meet NEMA vibration limits; all external hardware is to be stainless steel.

e. Cable leads are to enter at the top of the motor, and are to allow the cable-to-motor connection to be accomplished in the filed without soldering. All power and control lead wires are to be double sealed s it enters the motor in such a manner that cable-wicking will not occur. This sealing system shall consist of a rubber grommet followed by epoxy that is high in adhesive qualities and has a low coefficient of expansion. Each cable wire is to have a small section of insulation removed to establish a window area of bare wire and each wire is to be untwisted and surrounded by epoxy potting material. A cable strain relief mechanism shall be an integral part of this sealing system. Cable sealing system shall be capable of withstanding an external pressure test of 1200 PSI as well as a cable assembly pull test as required by Underwriters Laboratories. Singular grommet or other similar sealing systems are not acceptable. Motor shall be supplied with 35 feet of multi-conductor type “SOW-A” or “W” power cable and control cable. Cable sizing shall conform to NEC specifications and be UL Listed.

f. Power and control leads shall be terminated on a sealed terminal board. The terminal board and its bronze lugs shall be O-ring sealed.

g. The motor cooling jacket shall be sealed to the motor housing with O-rings. A portion of the liquid being pumped shall be used to cool the motor. The liquid enters the motor cooling jacket internally via a self-cleaning, rotating flow-control disc to prevent solids from entering and accumulating in the mechanical seal area and cooling water jacket. The cooling jacket shall be designed so that on start-up there is a means to purge the air from the jacket as the cooling water enters.

7. Shaft Seal Arrangement

a. Pumps shall be provided with two separate tandem-mounted mechanical seals to prevent the pumped liquid from entering the rotor/stator cavity area to ensure reliability of operation. The upper and lower seals are mounted to rotate in the same direction.
b. The lower mechanical seal mating surfaces are to be immersed in an oil bath, sealing the pump volute chamber from the oil cavity. Oil in this cavity shall also lubricate the upper mechanical seal faces. Seal faces of both the upper and lower mechanical seals shall be held in contact by independent polymeric elastomer bellows, which act as a spring mechanism. Seals require neither maintenance nor adjustment, but shall be easily inspected and replaced. Pressure generated by the pump assists in sealing the mating surfaces of the lower seal.
c. Component material for the upper seal shall consist of a composite elastomer body, carbon steel snap ring, Buna-N O-ring, carbon rotating face and ceramic stationary face. Lower seal component construction shall include a composite elastomer body, stainless steel clamp and set screws, Buna-N O-ring, silicon carbide rotating face and tungsten carbide stationary face.
d. Two moisture detection probes shall be installed so that they will detect moisture in either the seal or stator cavity measuring resistivity between the probes. They shall be wired internally to the control cable connection at the top of the motor. Float type devices located in the rotor/stator area or single probe-to-ground moisture detectors measuring continuity are not acceptable. O-ring sealed inspection plugs shall be provided in the mechanical seal oil chamber for ease of inspection, draining and filling of oil.

8. The pump shall rotate on a grease lubricated-for-life thrust bearing and grease lubricated radial bearing with a minimum L10 life of 50,000 hours. Lower shaft bearings shall be locked in place to prevent shaft movement and to take thrust loads.

9. Control shall be from a duplex control panel. Panel shall be a NEMA 3R steel enclosure. Panel shall be wall mounted. The following items shall be standard:

10. Controller shall include the following:

a. Fused disconnect switches with lockout handles thru cover for main sewage pumps

b Magnetic starters with overload and low voltage protection

c. Hand-Off-Automatic selector switches

d“ Easy” Electric alternator and PLC

d . Control circuit transformers, 120 volt

e. Pump running lights

f. Overload reset buttons

g. (1) Wired and numbered terminal strip

h. (1) High water alarm with light, alarm buzzer and silencing switch with dry contacts for remote monitoring

i. (2) Mercury float switches for backup

j. (1) Milltronics Hydroranger Ultrasonic Level Controller and Transducer

k. Level Controller: The multi-purpose level transmitter shall be microprocessor based echo-time measuring type providing an electrical output signal proportional to the level of material, space, volume, flow or differential as may be required. It shall consist of one or two transducers and a transmitter connected by coaxial cable.

l. Transducer: Operating Principle: Acoustic impulses emitted from an ultrasonic sensor are reflected back from the material surface and are received by the sensor. The transit time of pulse travel from generation to echo is measured. The elapsed time is proportional to the distance between the sensor and material surface.

m. Primary Sensor: The acoustic sensor/transducer shall be Milltronics ultrasonic transducer with a polarized barium titanate crystal with acoustic impedance matching face

11. Testing of Pumps and Controllers

a. A certified factory performance test shall be performed on each pumping unit in accordance with Hydraulic Institute Standards, latest edition. Tests shall be sufficient to determine the curves of head, input horsepower, and efficiency relative to capacity from shutoff to 150% of design flow. A minimum of six points, including shutoff, shall be taken for each test. At least one point of the six shall be taken as near as possible to each specified condition.

b. Results of the performance tests shall be certified by a Registered Professional Engineer and submitted for approval before final shipment.

1 INSPECTION REPORT – REHABILITATION OF EASTERN AVENUE PUMPING STATION

Reconstruction of Eastern Avenue
Bridge over Kenilworth Avenue, N.E.

DISTRICT OF COLUMBIA
WATER AND SEWER AUTHORITY

INSPECTION REPORT

REHABILITATION OF EASTERN AVENUE PUMPING STATION

PDH Associates, Inc.

May 25, 2008

EASTERN AVENUE N.E.
STORMWATER PUMP STATION

VISUAL INSPECTION REPORT AND REPAIR RECOMMENDATIONS

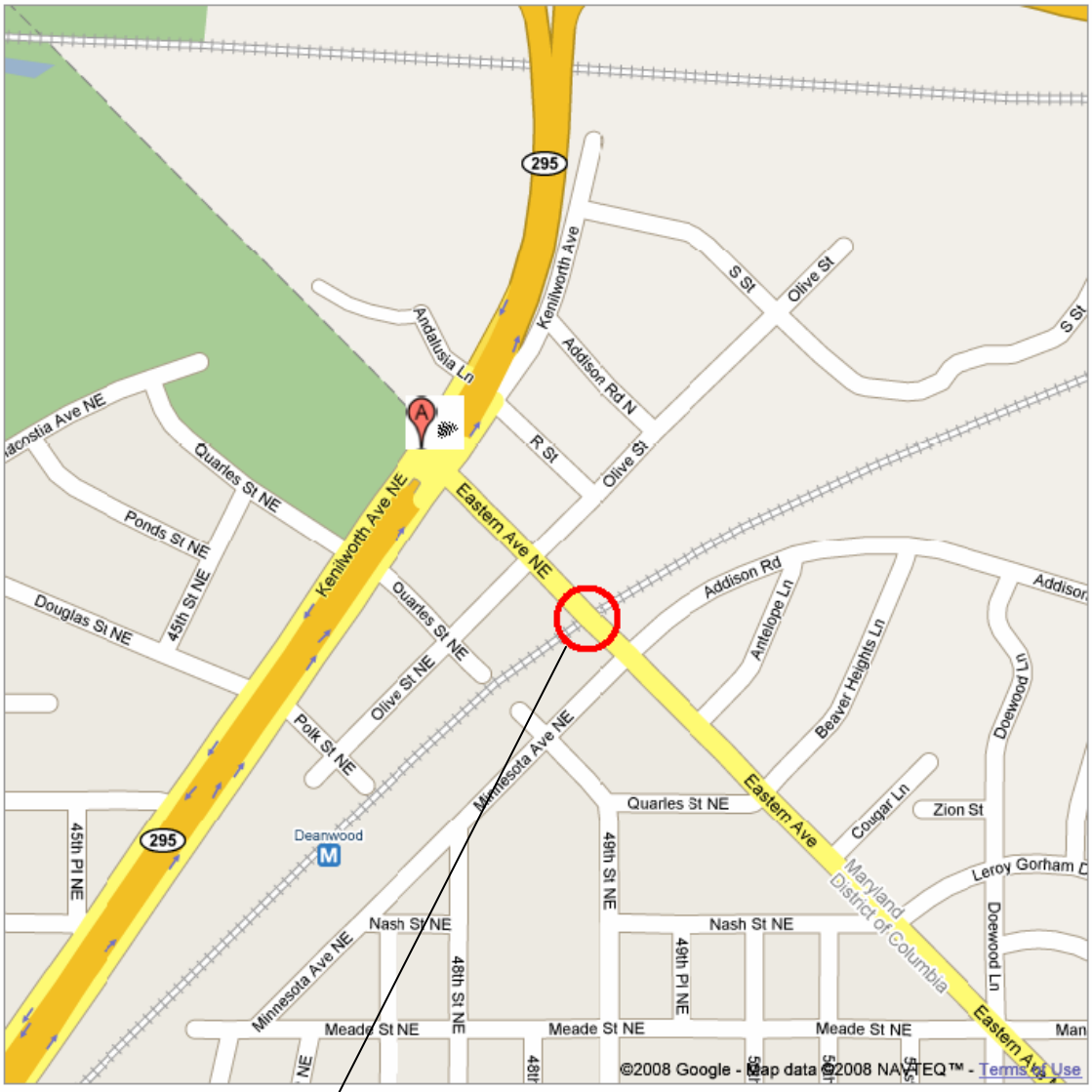

Pump Station at Railroad Underpass

PDH Associates, Inc.

EASTERN AVENUE N.E.
STORMWATER PUMP STATION

TABLE OF CONTENTS

Description	Page
General	2
Finding	2
Recommendation	3
Fig. 1Thru. Fig. 4	4 - 7
Photos	8 - 15
Existing Drawings	16 - 17

EASTERN AVENUE N.E.
STORMWATER PUMP STATION

General;

The Stormwater Pump Station, built around 1935, is located on the Eastern Avenue, N.E. underpass at the railroad crossing. It is designed to collect downgrade stormwater from the lowest spot on Eastern Avenue and discharging it into the nearby storm sewer using two pumps. This is the two-level concrete structure abutting the South abutment of the railroad bridge over Eastern Avenue, N.E.
On June 27, 2008, PDH Associates, Inc. conducted a visual inspection of the accessible structural elements of the reinforced concrete structure to evaluate its existing structural condition. The following findings and recommended repairs are based on the visual inspection.

Findings:

Roof Slab: The roof slab was inspected from a distance by standing on a ladder and observing the slab covered with debris. However, it was inspected from the underside, and it is in fair condition without any trace of water leakage.

Exterior Wall and Drainage Trough:
The front wall facing Eastern Avenue is only accessible from the outside for inspection. It appears in fair condition. The 6 foot wide entrance door in this wall needs to be replaced with a new one (Photo No. 1).
The concrete drainage trough exhibited spalled / chipped concrete (Photo No. 2), and some debris. There are a couple of holes at bottom slab of drainage trough (Photo No. 3). The grating to cover this trough is missing.

Motor Room: This single room is on the ground floor and it houses the motors and electrical panels. The floor slab has two openings that go down to the second level pump chamber and the sump area. The floor slab is in fair condition, except the area around the openings sound hollow with delamination and spall (Fig 1). The grating covering the 6' by 4' opening showed signs of corrosion and a deformed lattice (Photo No. 6). The wall at top of the door opening has a couple of spalled concrete with exposed rebar (Photo No. 7). The wall paint is peeling off, and there are some holes in the wall (Photo No. 8). Overall this room is in fair condition.

Pump Chamber:
There are two pumps in this chamber. The partition wall between this room and the sump room has a crack (photo No. 9). As encountered in Photo No's. 10 and 11, the pump chamber ceiling and the beam underside of the opening exhibit some spalled concrete and exposed rebar. The South East corner wall of this chamber also has some spalled areas (Photo No. 12). The steel rod rungs / steps exhibit some effects of corrosion.

Sump: During inspection the sump was filled with several inches of water. The built-up material (presumably water proofing membrane) on the walls appeared to be

wrinkling on the wall surface (Photo No. 14). The concrete ceiling under the 12" float pipe has some spalled area (Photo No. 15). The steel rods / steps in this room also show signs of rusting.

Recommendation;

General:

- Inspect and repair all deficiencies in joints, cracks, leakage, scaling, spalling, exposed reinforcing, and delamination of the all concrete area which were not accessible during the visual inspection.

Roof Slab:

- Remove all debris and thoroughly clean top surface
- Inspect clean area and seal all cracks
- Repair concrete surface if any deficiencies are encountered

Exterior Wall / Front Wall and Drainage Trough:

- Remove and replace entrance door
- Clean and repaint the door frame
- Repair drainage trough surface including ledge for grating
- Repair the bottom slab of drainage trough
- Install new grating to cover drainage trough

Motor Room:

- Remove all delaminated concrete around the floor openings and repair the concrete including all floor concrete splled area.
- Repair the concrete wall at top of door opening.
- Fill the existing holes with grout
- Clean and repaint the walls and ceiling with a waterproof coating system
- Replace the grating cover and framing at the pump chamber access opening
- Provide a vent system to reduce the humidity level in the motor room

Pump Chamber:

- Repair cracked and spalled areas on the wall
- Repair the spalled areas under the beam and ceiling
- Clean and repaint the walls and ceiling with a waterproof coating system
- Steps - clean the steel rods and paint

Sump:

- Remove the built-up material and apply new waterproofing coating on the walls and ceiling
- Repair the concrete ceiling
- Steps - clean the steel rods and paint

Eastern Avenue N.E. Stormwater Pump Station

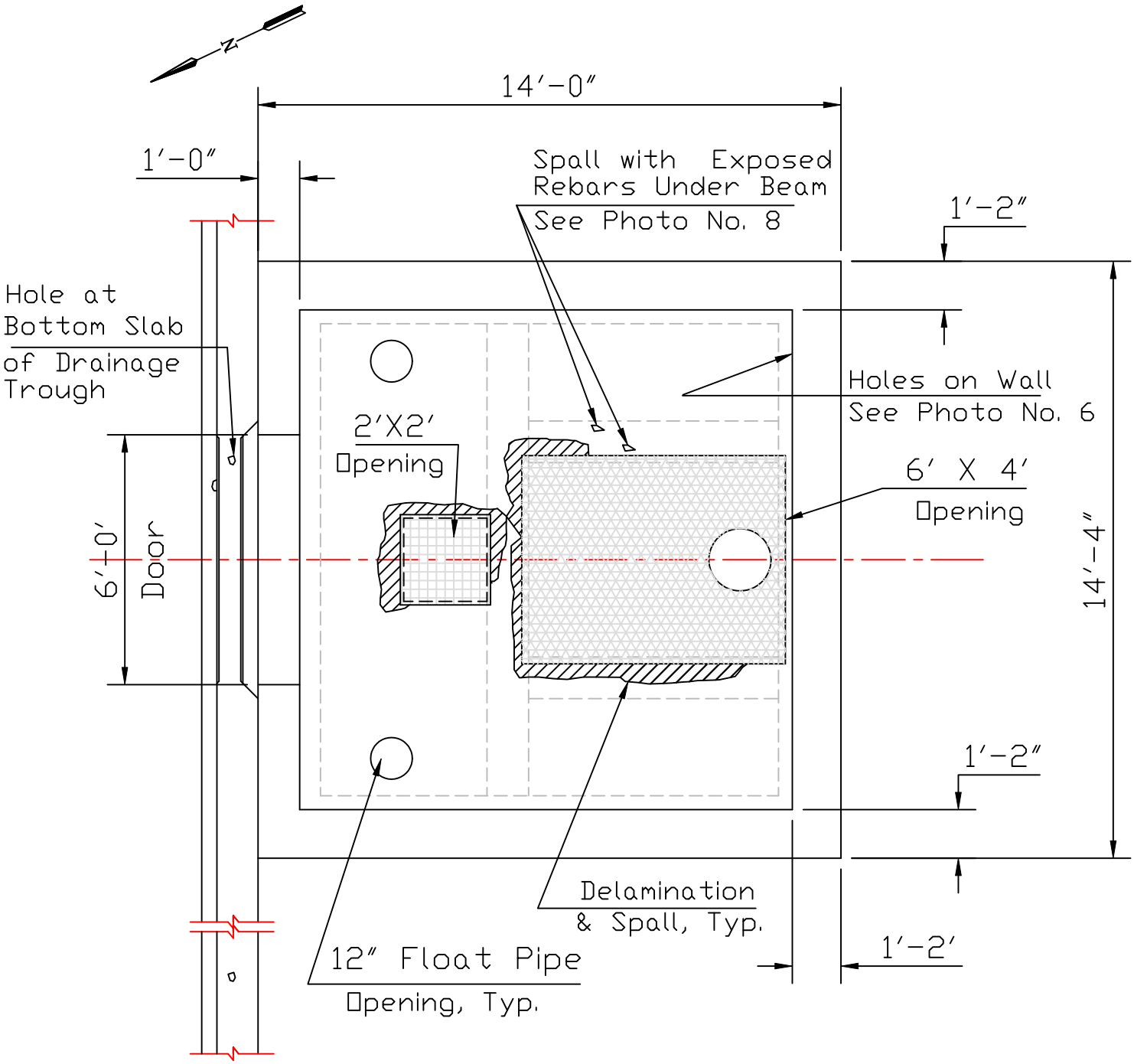

MOTOR ROOM - PLAN

Fig. 1

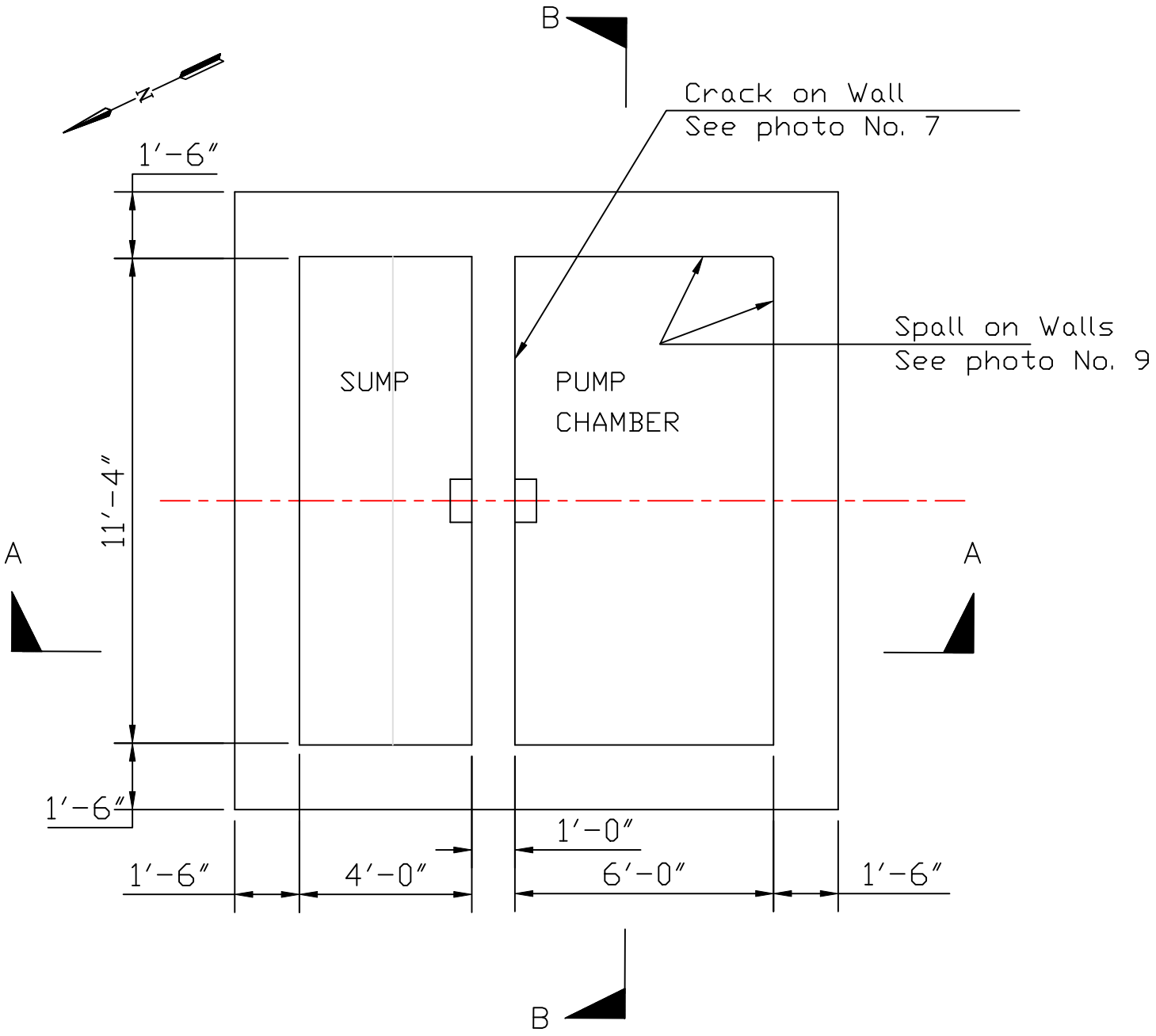

SUMP AND PUMP CHAMBER - PLAN

Fig. 2

Eastern Avenue N.E. Stormwater Pump Station

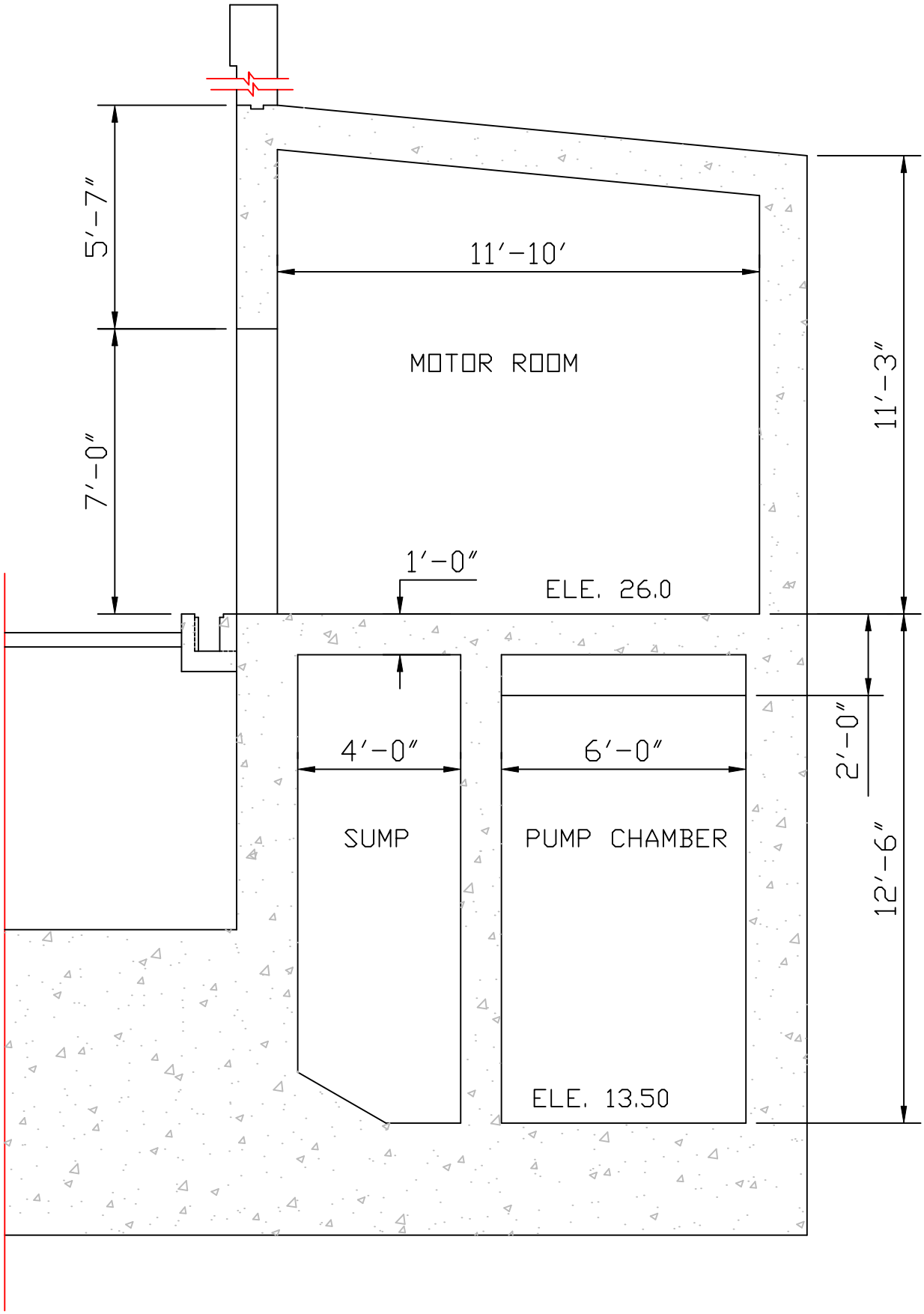

SECTION A-A

Fig. 3

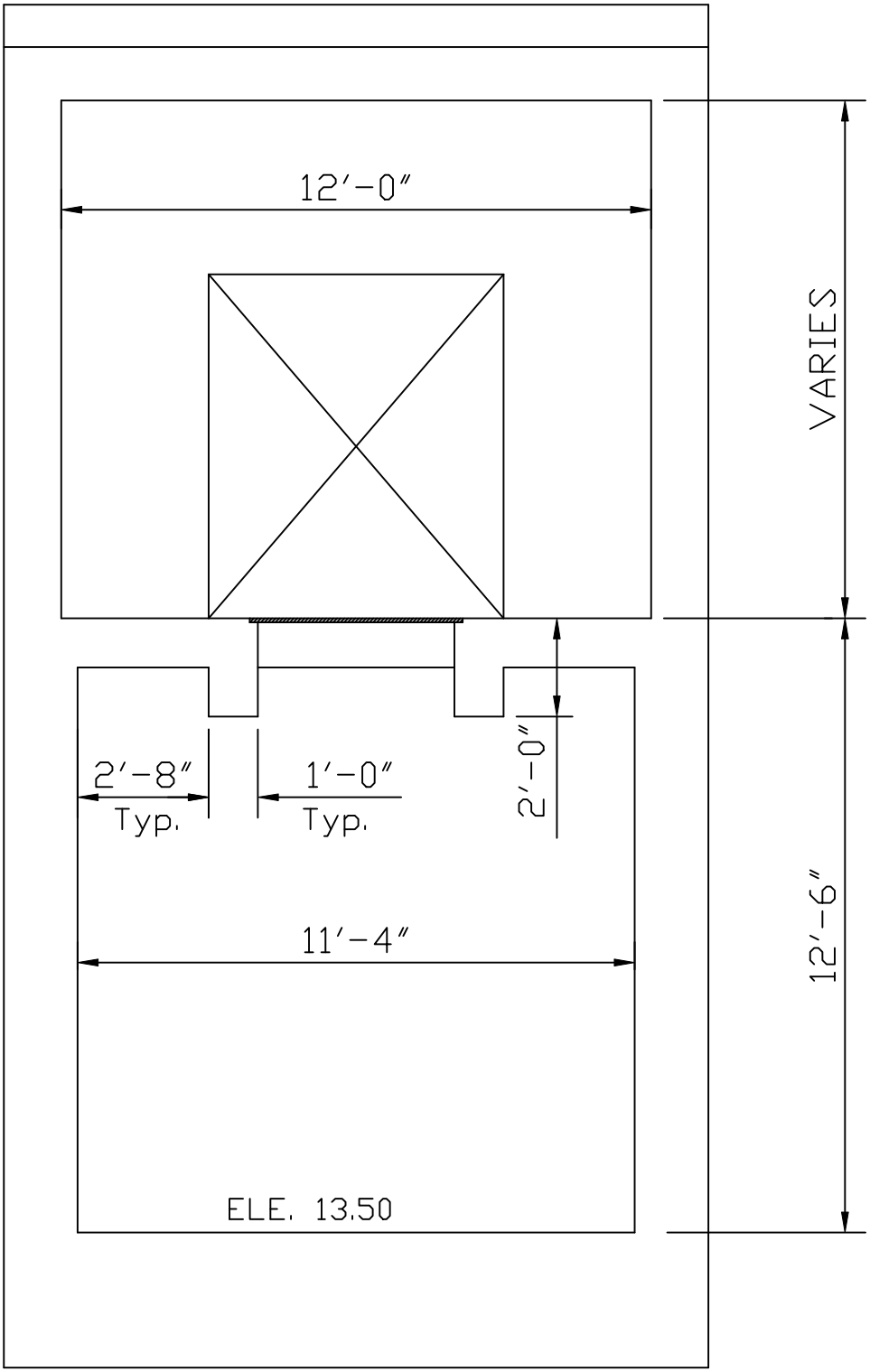

SECTION B-B

Fig. 4

Photo No. 1- Front Door

Photo No. 2- Drainage Ditch at Front Door

Photo No. 3- 3" Hole at Bottom Slab of Drainage Ditch

Photo No. 4- Motor Room, Walls

Photo No. 5- Motor Room, Walls

Photo No. 6- Motor Room, Floor

Photo No. 7- Motor Room, Wall at top of Door Opening

Photo No. 8- Motor Room, South Wall

Photo No. 9- Pump Chamber, Crack on Wall

Photo No. 10- Pump Chamber Ceiling, Spall and Exposed Rebar under the Beam

Photo No. 11- Pump Chamber, Spall and Exposed Rebar on Ceiling

Photo No. 12- Pump Chamber Walls, Concrete Spall

Photo No. 13- Sump Room

Photo No. 14- Sump Room

Photo No. 15- Sump Room, Ceiling at Float Pipe

Photo No. 16- Roof Slab

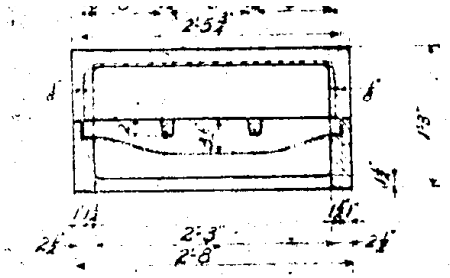

PLAN AND SECTION H-H OF COMBINATION CURB AND GUTTER DROP CASTING – 8 REQUIRED

Scale 1"=1'-0"

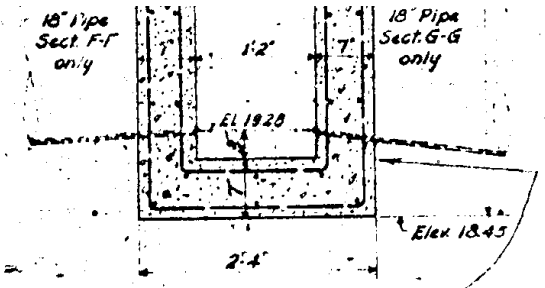

SECTION F-F – G-G

Scale 1"=1'-0"

℄ @ 1'-0" o.c., both ways and both faces of side walls, end walls and base.

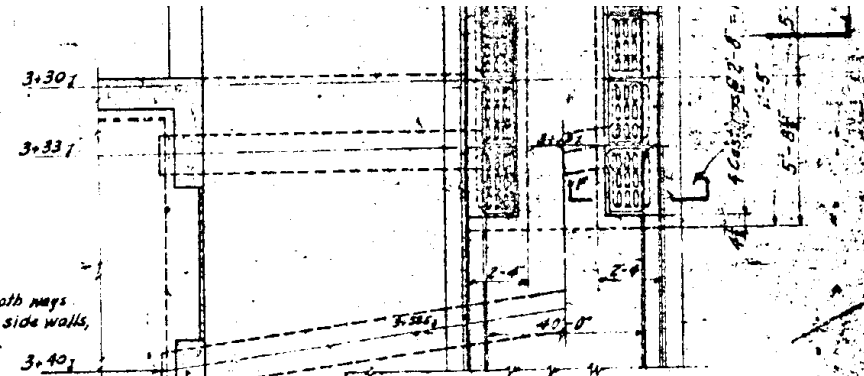

PLAN AT COMBINATION CURB AND GUTTER DROP STORMWATER INLET SUMP

Scale 1/4"=1'-0"

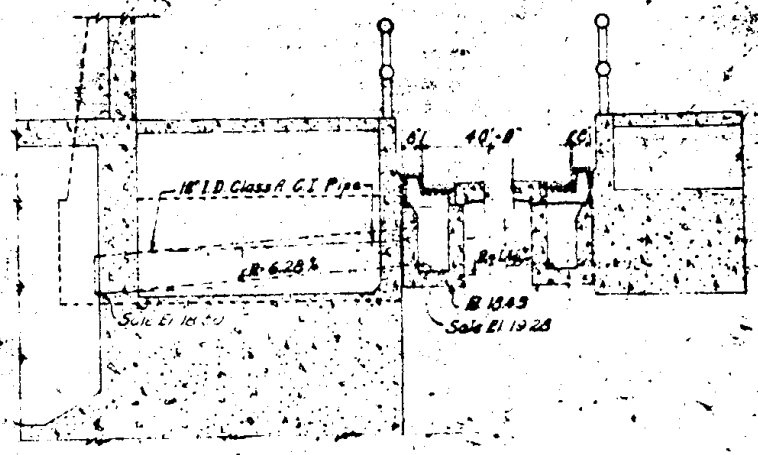

SECTION E-E

Scale 1/4"=1'-0"

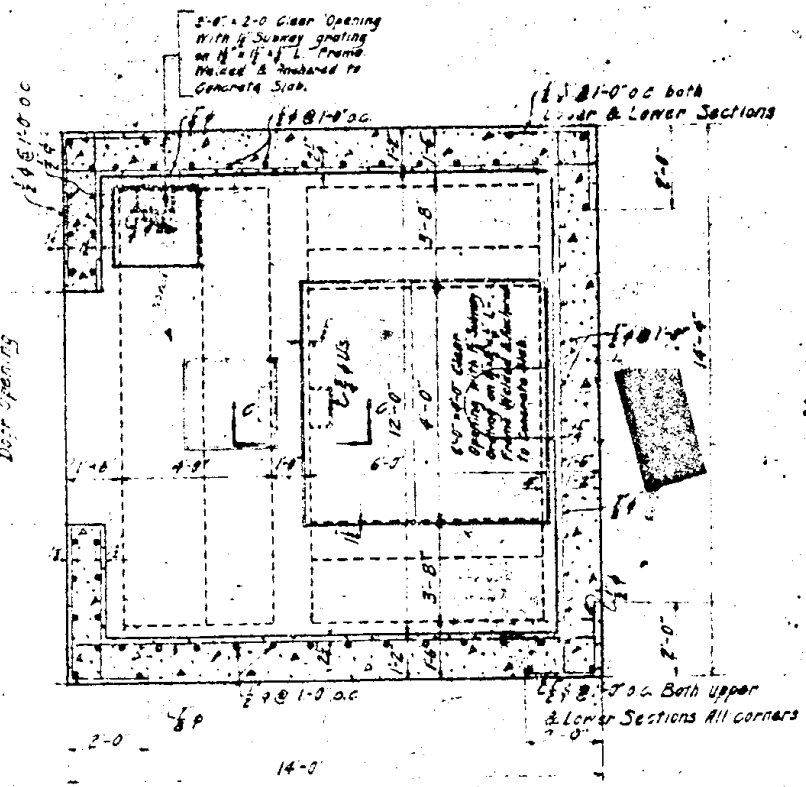

SECTION B-B

Scale 1/8"=1'-0"

Pump capacity –
2 – 4000 GPM pumps
w/ 29½' head

1. For general notes and list of drawings – See Sheet #1.
2. All cast iron castings to be gray cast iron conforming to Federal Specification QQ-I-651.
3. Motor Room Door.
   The door to be a double swing, ventilated top and bottom, Truscon stock type, or equal.
   The stiles, top rail and bottom rail shall be constructed of #14 gauge pressed steel tube 3 3/4" x 1 3/8".
   The steel panels shall be constructed from cold rolled sheets, full pickled, re-annealed, and patent leveled.

The corners shall be mitered, and internally reinforced, the reinforcing extending eight and one half (8½) inches in both directions from the corner. All miter joints shall be face welded and ground smooth.

The door shall be equipped with steel panels electrically spot welded to the stiles and rails. This panel shall not be less than #18 gauge in thickness.

Doors shall be equipped [illegible]

EASTERN AVE. UNDERPASS, N.E.

OFFICE OF THE ENGINEER COMMISSIONER, D.C.

ENGINEER OF BRIDGES, D.C.

STORMWATER OUTLET SEWER SYSTEM AND PUMP HOUSE DETAILS

Designed by M.L.M. Drawn by [illegible]

Traced by L.W.J. & M.A.S. Checked by [illegible]

Reviewed Date [illegible]

Recommended for approval [illegible]

Sheet 9 of 9

59-9

PROFILE AT ℄ PROPOSED 24" STORMWATER OUTLET SEWER

Scale 1" = 100' horizontal
1" = 20' vertical

ELEVATION OF STORMWATER OUTLET SEWER SUI

Scale 1/8" = 1'-0"

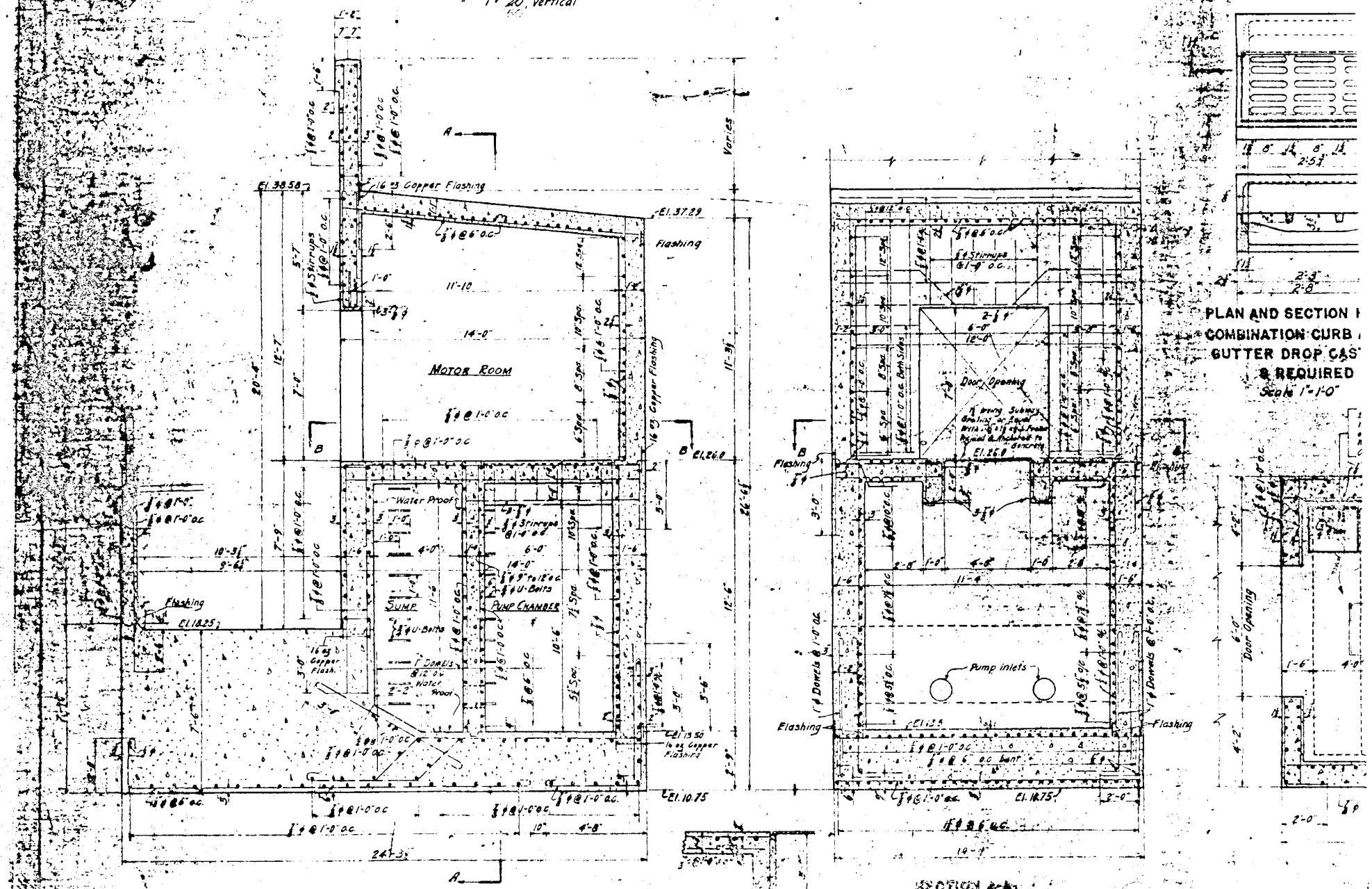

SECTIONAL VIEW THROUGH PUMP HOUSE

Scale 1/8" = 1'-0"

Note: Openings for 18" sump inlets not shown

SECTION C-D

Scale 1/8" = 1'-0"

SECTION B-B

Scale 1/8" = 1'-0"

PLAN AND SECTION I
COMBINATION CURB
GUTTER DROP CAS
& REQUIRED

Scale 1" = 1'-0"

1 LEAD AND ASBESTOS SURVEY
FOR
THE EASTERN AVENUE PUMP STATION

Reconstruction of Eastern Avenue
Bridge over Kenilworth Avenue, N.E.

GREENHORNE & O'MARA
CONSULTING ENGINEERS

August 22, 2008

Bruce B. Beall, Program Manager
DC Water and Sewer Authority (WASA)
5000 Overlook Avenue
Washington, DC 20032

RE: Lead and Asbestos Survey for the Eastern Avenue Pump Station, Northeast, Washington, D.C.

Dear Mr. Beall:

Greenhorne and O'Mara, Inc. (G&O) recently completed a lead and asbestos survey at the above-referenced property (Figure 1, Appendix A). The purpose of the inspection was to determine if asbestos-containing materials (ACMs) and/or lead-based paint (LBP) were present within the building. Based on G&O's site visit and survey efforts, no suspect ACMs were observed at the pumping station. LBP was identified in the pumping station by G&O as well as through previously conducted surveys. Tables are presented within the text of this letter/report, but figures and other supporting documentation are presented as appendices.

PREVIOUS REPORT SUMMARY

Prior to completing the lead and asbestos inspection, G&O was provided a copy of two previously prepared reports: "*Stormwater Pumping Stations District of Columbia Water and Sewer Authority*" (September, 2001) and an excerpt from an undated report identified as "*15 Stormwater Pumping Station Asbestos and Lead Based Paint Survey Report*" (no date).

The 2001 report does not contain any sample information regarding the presence or absence of ACMs or LBP. Background information and an overview of the facility are provided. According to the 2001 report, the well capacity of the pumping station is approximately 3,465 gallon and it was constructed in 1935 under a railroad overpass.

The undated report indicated no suspect ACMs were observed during the site visit; therefore, no samples were collected. A lead inspection was performed, and 13 samples were collected for analysis via laboratory method SW 846, 7420. Of the 13 samples collected and analyzed, five were reported to have lead contents of more

6110 Frost Place ▪ Laurel, MD 20707
Phone 301 982 2800 ▪ Fax 301 220 2483
www.G-and-O.com

than 0.50% in weight (which is the U.S. Environmental Protection Agency or "EPA" standard). Table 1 depicts these materials and their lead content (in % weight).

Table 1
Previously Conducted Lead Survey Results

Surface	Color	Lead Content (% weight)
Floor	Red	1.700
Motor	Green	1.700
Door	Green	5.200
Electrical Panel	Lt. Green	1.90
Water Level Equipment	Green	2.00

ASBESTOS

No suspect ACMs were identified during the previously conducted surveys. The walls and floor of the pumping station are constructed of concrete. No pipe insulation of any kind was observed within the small facility. G&O did not observed any suspect ACMs during the visual inspection (2008) of the pumping station, which was conducted on July 24, 2008. Therefore, no samples were collected for analysis.

LEAD

In Washington, D.C., guidelines define LBP as paint that contains 1.0 milligrams per centimeter squared (mg/cm^2) of lead or more using an X-Ray Fluorescent (XRF) analyzer. The most accurate method to test for the presence of LBP is the XRF analyzer, which requires licensed operators.

LBP Methodology

The inspection to identify LBP at the site was performed by Kathy Nicholson, a DC-licensed Lead Inspector (# DC08-387). A Niton XL 309 XRF Analyzer with a Cadmium-109 source was utilized to provide in-situ analysis of painted surfaces. The instrument was calibrated before and after use in accordance with the manufacturer's specifications. The lead inspection protocol was based on current U.S. Department of Housing and Urban Development (HUD) guidelines and the instrument's Performance Characteristic Sheet (PCS).

LBP Results

A total of 12 surfaces were tested with the XRF during the inspection. The tests were conducted on exterior components and interior components. Only one surface tested with the XRF yielded a reading equal to or above 1.0 mg/cm^2. This surface was the metal door casing (dark green in color) of the entry door to the pumping station, which recorded a lead level of 43.0 mg/cm^2. Although only one surface was identified to be painted with LBP, several surfaces within the project area are lead-containing (recording lead levels below the EPA limit). Table 2 outlines LBP and lead-containing surfaces at the pumping station. Lead survey data sheets are presented as Attachment B.

Table 2
LBP and LCM at Pumping Station

Surface	Color	Lead Content (mg/cm^2)
Metal door (exterior)	Dark green	0.01
Concrete Wall B	White	0.03
Concrete floor	Burgundy	0.03
Large metal pipe	Mint green	0.05
Concrete Wall C	White	0.01
Metal pipe cover	Black	0.01
Metal pipe cover	Mint green	0.5
Metal door casing (exterior)	**Dark green**	**43.0**

Bold indicates LBP

OTHER HAZARDOUS MATERIALS

During G&O's site visit, the pumping station was inspected for the presence of hazardous materials, beyond those discussed above, which would require additional consideration and/or specialized removal efforts prior to conducting demolition or renovation activities. This section provides a brief summary of equipment identified within the on site structure that will require special attention and their quantities, where possible. Details relating to their removal are provided at the end of this report in the "Conclusions" section.

Mercury & Polychlorinated Biphenyls (PCBs)

The District Department of the Environment (DDOE) regulates universal wastes under District of Columbia Municipal Regulations (DCMR) and the Code of Federal Regulations: DCMR 4273 and 40 CFR Part 273. EPA and DDOE regulations encourage consumer recycling of materials identified as universal wastes. G&O observed one potentially mercury-containing thermostat within the pumping station on the northern interior wall. Due to the nature of motor equipment in the pumping station, it is possible that PCB-containing ballasts are located within this machinery.

CONCLUSIONS

G&O's survey confirmed the presence of LBP/LCM. Additionally, one item of universal waste was identified in the building. This section provides information regarding future actions that should be taken to remove potentially hazardous materials from the pumping station, prior to the commencement of renovation or demolition activities.

Asbestos

No suspect ACMs were observed during G&O's visual inspection of the pumping station; therefore, no samples were collected. No further action is required at this time.

Lead

Although the XRF did not confirm the results of the 2001 lead survey, the laboratory analysis of paint chips from the pumping station should not be discounted. As such, G&O maintains that in addition to the lead-based painted door casing identified by this survey, the five surfaces (floor, door, motor, electrical panel, and water level equipment box) identified in the 2001 survey should also be considered LBP. The renovation contractor should evaluate potential sources of exposure to lead, including lead in painted surfaces, prior to demolition in accordance with Occupational Safety and health Administration (OSHA) requirements. The contractor should also select demolition and/or finishing methods that minimize worker exposure to lead. Because the purpose of this project is to renovate the pumping station (and not to perform an abatement), engineering controls and personal protective equipment must be incorporated into the demolition/renovation work plans, as necessary, based on the potential exposure hazards and the OSHA Lead in Construction standard (29 CFR 1926.62). Reasonable precautions should be taken to prevent the release of fugitive dust emissions and contamination of surface soils with lead-containing debris during demolition.

Mercury & PCBs

Mercury-containing thermostats cannot be disposed at a municipal solid waste landfill. These items must be properly recycled or reused. Once the thermostat is no longer in use it becomes a waste and should be handled in accordance with the above-mentioned Federal and City regulations. The thermostat manufacture or the DDOE may be contacted to obtain recycling instructions or universal waste drop off locations within the City.

G&O is pleased to have this opportunity to be of service to DC WASA. Should you have any questions or comments regarding the above findings and recommendations, please feel free to call me at (301) 982-2852.

Sincerely,

J. Ross Voorhees, CHMM
Technical Director

Enclosure(s): Appendix A – Figures
Appendix B – Lead Survey Results
Appendix C – Site Photographs

References:

District Department of the Environment (DDOE). (n.d.). *District of Columbia Hazardous Waste Management Regulations Chapter 42 – Standards for the Management of Hazardous Waste and Used Oil.* Retrieved August 21, 2008, from http://ddoe.dc.gov/ddoe/frames.asp?doc=/ddoe/lib/ddoe/information/pdf/hwm_regs.pdf.

U.S. Environmental Protection Agency (EPA). (2003). Title 40 Protection of Environment Part 273 Standards for Universal Waste Management. Retrieved August 21, 2008, from http://edocket.access.gpo.gov/cfr_2003/julqtr/pdf/40cfr273.4.pdf.

Unknown author. (n.d.). *15 Stormwater Pumping Stations Asbestos and Lead Based Paint Survey Report* (pages 13-17 and Appendices D, E, and F).

Unknown author. (2001). *Stormwater Pumping Stations District of Columbia Water and Sewer Authority September, 2001* (one page of report and two pages of Appendix I).

Appendix A

Figures

Eastern Avenue
Pumping Station
New York Ave
201
Tuxedo Rd
50
295
Ponds St NE
Douglas St NE
Polk St NE
Kenilworth Ave NE
Quarles St NE
Addison Rd
Eastern Ave
Zion St
Elkwood Ln
Nye St
Leroy Gorham Dr
Nash St NE
Minnesota Ave NE
Meade St NE
Doewood Ln
Mann St
Chapelwood Ln
Duel
Lee St NE
Kane Pl NE
Sheriff Rd NE
Sheriff Rd
Just St NE
© 2008 Tele Atlas
Google
38°54'40.14" N
76°55'53.07" W
elev 42 ft
Eye alt 6471 ft

Appendix B

Lead Survey Results

XRF Survey Form

page 1 of 1

Inspector(s): Nicholson/Duggan Date: 7/24/08 Building: DC Pump Sta Eastern Ave @ Kenilworth

Reading #	Room	Component	Substrate	Pos/Neg	Reading	Notes
444		calibration			1.2	
445		"			1.1	
446		"			1.0	
447		door	metal		0.01	dark green (outside)
448		"	"		0.00	" (inside)
449	NULL	wall B	concrete		0.03	white
450		floor	"		0.03	burgandy
452		large pipe	metal		0.05	mint green
453		wall C	concrete		0.01	white
454		pipe cover	metal		0.01	black
455	NULL	pipe cover	metal		~~0.5~~	black
456		pipe cover	metal		0.5	mint green
457		door casing	metal		43.0	dark green (outside)
458		door	"		0.0	dark green (outside)
459		calibration			1.1	
460	NULL					
461		calibration			1.3	
462		"			1.1	

Appendix C

Site Photographs

Photo 1: Entry door to pumping station (LBP door casing)

Photo 2: Metal piping

Photo 3: motor and electrical panels

Photo 4: Electrical equipment

Photo 5: Metal grate

Photo 6: Thermostat

1 CSXT CONSTRUCTION REQUIREMENTS

Reconstruction of Eastern Avenue
Bridge over Kenilworth Avenue, N.E.

CONSTRUCTION REQUIREMENTS

When performing work on, over or adjacent to CSX Transportation (CSXT) right-of-way or operations, the Contractor must abide by the current CSXT Special Provisions, and the following additional requirements.

1. All construction related correspondence will be directed to AECOM acting as the Construction Monitoring Representative (CMR) on behalf of CSXT, with the following contact and address:

   Brian V. Harrison
   Manager – Construction Services
   AECOM
   260 S. Broad Street, Suite 1500
   Philadelphia, PA 19102
   (215) 966-4846

   Upon receipt of notification, the CMR will direct the Contractor to the local CSXT construction contact for the project.

2. The Contractor shall submit the following construction procedures and documents. The Contractor shall obtain written acceptance from CSXT or their representative before proceeding with construction.

   a. Means and Methods – The Contractor shall develop a detailed submission indicating the progression of work with specific times when tasks will be performed during the project. This submission will include a walkthrough at which time CSXT personnel will be present. Work will not be permitted to commence until the Contractor has provided CSXT with a satisfactory plan that the project will be undertaken without scheduling, performance or safety related issues. Provide a listing of the anticipated equipment to be used, the location of all equipment to be used and insure a contingency plan of action is in place should a primary piece of equipment malfunction. All work in the vicinity of CSXT property that has the potential of affecting CSXT train operations must be submitted and approved by CSXT prior to work being performed. This submission will also include a detailed narrative discussing the coordination of project safety issues between the sponsor, Contractor, CSXT and the CMR. The narrative shall address project level coordination and day to day, specific work operations including, but not limited to, equipment operations and temporary works.

   b. Containment System – Removed paint and debris may not be deposited on the CSXT right-of-way at any time during cleaning operations. Vacuum type systems for paint removal operations to prevent paint and debris deposits are required in lieu of a containment system over the track(s). The outside party selected contractor may submit a containment system for work over CSXT for acceptance by the railroad if the following CSXT horizontal and vertical clearance standards can be maintained. Any temporary containment system shall not encroach horizontally within eighteen feet (18') measured perpendicularly from the centerline of the nearest track. Any containment system must also maintain the existing vertical clearance over all tracks or a minimum of 23'-0" measured from top of high rail to the lowest point of structure in the clearance area which extends 6'-0" to both sides from centerline of track. If a containment system can meet these clearance standards, a construction submittal must be provided and include a written installation and removal procedure and a plan showing the details of the system. This submission is to include any work platforms with design loads and supporting calculations signed and sealed by a Professional Engineer in the State of Maryland. The design of the system shall also be in accordance with OSHA and all applicable environmental standards.

   c. Construction Schedule – Submit a detailed construction schedule for the duration of the project clearly indicating the time periods while working on and around CSXT right-of-way. As the work progresses, this schedule shall be updated and resubmitted as necessary to reflect changes in work sequence, duration and method, etc.

d. Insurance – Submit all required insurance information in accordance with the current CSXT Insurance Standards for approval. The complete original policies should be submitted to:

Donna W. Melton
Manager – Insurance
CSX Transportation, Inc.
500 Water Street - C907
Jacksonville, FL 32202
Phone: 904-359-1247
Fax: 904-245-2833

with a copy to the CMR. The insurance policies will be required to be in place and approved prior to any work commencing on or that could potentially impact CSXT right-of-way.

e. Emergency Action Plan – Submit an emergency action plan indicating the location of the site, contact numbers, access to the site, instructions for emergency response and location of the nearest hospitals. This plan should cover all items required in the event of an emergency at the site including fire suppression. Coordinate the Emergency Action Plan with the safety related discussion of the Means and Methods submission discussed above. The plan should also include a method to provide this information to each project worker for each day on site.

3. Up to thirty (30) days will be required to review all construction submissions. Up to an additional thirty (30) days will be required to review any subsequent submissions returned not approved.

4. The Contractor must not use CSXT right-of-way for storage of materials or equipment during construction. The CSXT right-of-way must remain clear at all times.

5. The Contractor will be required to abide by the provisions of the County/CSXT Construction Agreement. Periodically, throughout the project duration, the Contractor will be required to meet, discuss and, if necessary, take immediate action at the discretion of CSXT personnel and/or the CMR to comply with provisions of that agreement and these specifications.

6. This project will require extensive use of CSXT Flagmen to protect train operations from project activity in the area of the tracks. While CSXT cannot guarantee the availability of flagmen at all requested times, every accommodation will be extended to the Contractor when forces are available. Flagging requests should be made to the CSXT Roadmaster Roger Taylor at 301-874-2769 at least thirty (30) days in advance. Termination or cancellation of a flagman requires ten (10) days notice to avoid incurring costs.

7. All operations that could potentially impact CSXT right-of-way must be coordinated with the CSXT Flagman.

8. The Contractor shall execute Schedule I (Contractor's Acceptance) prior to starting work on, over, under or adjacent to CSXT right of way, which is part of the Construction Agreement to be executed between the Agency and CSXT.

9. Contractor access will be limited to the immediate project area only. The CSXT right-of-way may not be used for contractor access to the project site and no temporary at-grade crossings will be allowed.

CSXT SPECIAL PROVISIONS

I. AUTHORITY OF CSXT ENGINEER

The CSXT Representative shall have final authority in all matters affecting the safe maintenance of CSXT operations and CSXT property, and his or her approval shall be obtained by the Agency or its Contractor for methods of construction to avoid interference with CSXT operations and CSXT property and all other matters contemplated by the Agreement and these Special Provisions.

II. INTERFERENCE WITH CSXT OPERATIONS

A. Agency or its Contractor shall arrange and conduct its work so that there will be no interference with CSXT operations, including train, signal, telephone and telegraphic services, or damage to CSXT's property, or to poles, wires, and other facilities of tenants on CSXT's Property or right-of-way. Agency or its Contractor shall store materials so as to prevent trespassers from causing damage to trains, or CSXT Property. Whenever Work is likely to affect the operations or safety of trains, the method of doing such Work shall first be submitted to the CSXT Representative for approval, but such approval shall not relieve Agency or its Contractor from liability in connection with such Work.

B. If conditions arising from or in connection with the Project require that immediate and unusual provisions be made to protect train operation or CSXT's property, Agency or its Contractor shall make such provision. If the CSXT Representative determines that such provision is insufficient, CSXT may, at the expense of Agency or its Contractor, require or provide such provision as may be deemed necessary, or cause the Work to cease immediately.

III. NOTICE OF STARTING WORK

Agency or its Contractor shall not commence any work on CSXT Property or rights-of-way until it has complied with the following conditions:

A. Notify CSXT in writing of the date that it intends to commence Work on the Project. Such notice must be received by CSXT at least ten business days in advance of the date Agency or its Contractor proposes to begin Work on CSXT property. The notice must refer to this Agreement by date. If flagging service is required, such notice shall be submitted at least thirty (30) business days in advance of the date scheduled to commence the Work.

B. Obtain authorization from the CSXT Representative to begin Work on CSXT property, such authorization to include an outline of specific conditions with which it must comply.

C. Obtain from CSXT the names, addresses and telephone numbers of CSXT's personnel who must receive notice under provisions in the Agreement. Where more than one individual is designated, the area of responsibility of each shall be specified.

IV. WORK FOR THE BENEFIT OF THE CONTRACTOR

A. No temporary or permanent changes to wire lines or other facilities (other than third party fiber optic cable transmission systems) on CSXT property that are considered necessary to the Work are anticipated or shown on the Plans. If any such changes are, or become, necessary in the opinion of CSXT or Agency, such changes will be covered by appropriate revisions to the Plans and by preparation of a force account estimate. Such force account estimate may be initiated by either CSXT or Agency, but must be approved by both CSXT and Agency. Agency or Contractor shall be responsible for arranging for the relocation of the third party fiber optic cable transmission systems, at no cost or expense to CSXT.

B. Should Agency or Contractor desire any changes in addition to the above, then it shall make separate arrangements with CSXT for such changes to be accomplished at the Agency or Contractor's expense.

V. HAUL ACROSS RAILROAD

A. If Agency or Contractor desires access across CSXT property or tracks at other than an existing and open public road crossing in or incident to construction of the Project, the Agency or Contractor must first obtain the permission of CSXT and shall execute a license agreement or right of entry satisfactory to CSXT, wherein Agency or Contractor agrees to bear all costs and liabilities related to such access.

B. Agency and Contractor shall not cross CSXT's property and tracks with vehicles or equipment of any kind or character, except at such crossing or crossings as may be permitted pursuant to this section.

VI. COOPERATION AND DELAYS

A. Agency or Contractor shall arrange a schedule with CSXT for accomplishing stage construction involving work by CSXT. In arranging its schedule, Agency or Contractor shall ascertain, from CSXT, the lead time required for assembling crews and materials and shall make due allowance therefore.

B. Agency or Contractor may not charge any costs or submit any claims against CSXT for hindrance or delay caused by railroad traffic; work done by CSXT or other delay incident to or necessary for safe maintenance of railroad traffic; or for any delays due to compliance with these Special Provisions.

C. Agency and Contractor shall cooperate with others participating in the construction of the Project to the end that all work may be carried on to the best advantage.

D. Agency and Contractor understand and agree that CSXT does not assume any responsibility for work performed by others in connection the Project. Agency and Contractor further understand and agree that they shall have no claim whatsoever against CSXT for any inconvenience, delay or additional cost incurred by Agency or Contractor on account of operations by others.

VII. STORAGE OF MATERIALS AND EQUIPMENT

Agency and Contractor shall not store their materials or equipment on CSXT's property or where they may potentially interfere with CSXT's operations, unless Agency or Contractor has received CSXT Representative's prior written permission. Agency and Contractor understand and agree that CSXT will not be liable for any damage to such materials and equipment from any cause and that CSXT may move, or require Agency or Contractor to move, such material and equipment at Agency's or Contractor's sole expense. To minimize the possibility of damage to the railroad tracks resulting from the unauthorized use of equipment, all grading or other construction equipment that is left parked near the tracks unattended by watchmen shall be immobilized to the extent feasible so that it cannot be moved by unauthorized persons.

VIII. CONSTRUCTION PROCEDURES

A. General

1. Construction work on CSXT property shall be subject to CSXT's inspection and approval.

2. Construction work on CSXT property shall be in accord with CSXT's written outline of specific conditions and with these Special Provisions.

3. Contractor shall observe the terms and rules of the CSXT Safe Way manual, which Agency and Contractor shall be required to obtain from CSXT, and in accord with any other instructions furnished by CSXT or CSXT's Representative.

B. Blasting

1. Agency or Contractor shall obtain CSXT Representative's and Agency Representative's prior written approval for use of explosives on or adjacent to CSXT property. If permission for use of explosives is granted, Agency or Contractor must comply with the following:

   a. Blasting shall be done with light charges under the direct supervision of a responsible officer or employee of Agency or Contractor.

   b. Electric detonating fuses shall not be used because of the possibility of premature explosions resulting from operation of two-way train radios.

   c. No blasting shall be done without the presence of an authorized representative of CSXT. At least 10 days' advance notice to CSXT Representative is required to arrange for the presence of an authorized CSXT representative and any flagging that CSXT may require.

   d. Agency or Contractor must have at the Project site adequate equipment, labor and materials, and allow sufficient time, to (i) clean up (at Agency's expense) debris resulting from the blasting without any delay to trains; and (ii) correct (at Agency's expense) any track misalignment or other damage to CSXT's property resulting from the blasting, as directed by CSXT Representative, without delay to trains. If Agency's or Contractor's actions result in delay of any trains, including Amtrak passenger trains, Agency shall bear the entire cost thereof.

   e. Agency and Contractor shall not store explosives on CSXT property.

2. CSXT Representative will:

   a. Determine the approximate location of trains and advise Agency or Contractor of the approximate amount of time available for the blasting operation and clean-up.

   b. Have the authority to order discontinuance of blasting if, in his or her opinion, blasting is too hazardous or is not in accord with these Special Provisions.

IX. MAINTENANCE OF DITCHES ADJACENT TO CSXT TRACKS

Agency or Contractor shall maintain all ditches and drainage structures free of silt or other obstructions that may result from their operations. Agency or Contractor shall provide erosion control measures during construction and use methods that accord with applicable state standard specifications for road and bridge construction, including either (1) silt fence; (2) hay or straw barrier; (3) berm or temporary ditches; (4) sediment basin; (5) aggregate checks; and (6) channel lining. All such maintenance and repair of damages due to Agency's or Contractor's operations shall be performed at Agency's expense.

X. FLAGGING / INSPECTION SERVICE

A. CSXT has sole authority to determine the need for flagging required to protect its operations and property. In general, flagging protection will be required whenever Agency or Contractor or their equipment are, or are likely to be, working within fifty (50) feet of live track or other track clearances specified by CSXT, or over tracks.

B. Agency shall reimburse CSXT directly for all costs of flagging that is required on account of construction within CSXT property shown in the Plans, or that is covered by an approved plan revision, supplemental agreement or change order.

C. Agency or Contractor shall give a minimum of 10 days' advance notice to CSXT Representative for anticipated need for flagging service. No work shall be undertaken until the flag person(s) is/are at the job site. If it is necessary for CSXT to advertise a flagging job for bid, it may take up to 90-days to obtain this service, and CSXT shall not be liable for the cost of delays attributable to obtaining such service.

D. CSXT shall have the right to assign an individual to the site of the Project to perform inspection service whenever, in the opinion of CSXT Representative, such inspection may be necessary. Agency shall reimburse CSXT for the costs incurred by CSXT for such inspection service. Inspection service shall not relieve Agency or Contractor from liability for its Work.

E. CSXT shall render invoices for, and Agency shall pay for, the actual pay rate of the flagpersons and inspectors used, plus standard additives, whether that amount is above or below the rate provided in the Estimate. If the rate of pay that is to be used for inspector or flagging service is changed before the work is started or during the progress of the work, whether by law or agreement between CSXT and its employees, or if the tax rates on labor are changed, bills will be rendered by CSXT and paid by Agency using the new rates. Agency and Contractor shall perform their operations that require flagging protection or inspection service in such a manner and sequence that the cost of such will be as economical as possible.

XI. UTILITY FACILITIES ON CSXT PROPERTY

Agency shall arrange, upon approval from CSXT, to have any utility facilities on or over CSXT Property changed as may be necessary to provide clearances for the proposed trackage.

XII. CLEAN-UP

Agency or Contractor, upon completion of the Project, shall remove from CSXT's Property any temporary grade crossings, any temporary erosion control measures used to control drainage, all machinery, equipment, surplus materials, falsework, rubbish, or temporary buildings belonging to Agency or Contractor. Agency or Contractor, upon completion of the Project, shall leave CSXT Property in neat condition, satisfactory to CSXT Representative.

XIII. FAILURE TO COMPLY

If Agency or Contractor violate or fail to comply with any of the requirements of these Special Provisions, (a) CSXT may require Agency and/or Contractor to vacate CSXT Property; and (b) CSXT may withhold monies due Agency and/or Contractor; (c) CSXT may require Agency to withhold monies due Contractor; and (d) CSXT may cure such failure and the Agency shall reimburse CSXT for the cost of curing such failure.

INSURANCE REQUIREMENTS

I. Insurance Policies:

Company and Contractor, if and to the extent that either is performing work on or about CSXT's property, shall procure and maintain the following insurance policies:

1. Commercial General Liability coverage at their sole cost and expense with limits of not less than $5,000,000 in combined single limits for bodily injury and/or property damage per occurrence, and such policies shall name CSXT as an additional named insured.

2. Statutory Worker's Compensation and Employers Liability Insurance with limits of not less than $1,000,000, which insurance must contain a waiver of subrogation against CSXT and its affiliates.

3. Commercial automobile liability insurance with limits of not less than $500,000 combined single limit for bodily injury and/or property damage per occurrence, and such policies shall name CSXT as an additional named insured.

4. Railroad protective liability insurance with limits of not less than $5,000,000 combined single limit for bodily injury and/or property damage per occurrence and an aggregate annual limit of $10,000,000, which insurance shall satisfy the following additional requirements:

   a. The insurer must be financially stable and rated B+ or better in Best's Insurance Reports.

   b. The Railroad Protective Insurance Policy must be on the ISO/RIMA Form of Railroad Protective Insurance - Insurance Services Office (ISO) Form CG 00 35.

   c. CSX Transportation must be named as the named insured on the Railroad Protective Insurance Policy.

   d. Name and Address of Contractor and Company must be shown on the Declarations page.

   e. Description of operations must appear on the Declarations page and must match the Project description, including project or contract identification numbers.

   f. Authorized endorsements must include the Pollution Exclusion Amendment - CG 28 31, unless using form CG 00 35 version 96 and later.

   g. Authorized endorsements may include:

      (i). Broad Form Nuclear Exclusion - IL 00 21
      (ii) 30-day Advance Notice of Non-renewal or cancellation
      (iii) Required State Cancellation Endorsement
      (iv) Quick Reference or Index - CL/IL 240

h. Authorized endorsements may not include:

(i) A Pollution Exclusion Endorsement except CG 28 31
(ii) A Punitive or Exemplary Damages Exclusion
(iii) A "Common Policy Conditions" Endorsement
(iv) Any endorsement that is not named in Section 4 (f) or (g) above.
(v) Policies that contain any type of deductible

5. Such additional or different insurance as CSXT may require.

II. Additional Terms

1. Contractor must submit its original insurance policies and two copies and all notices and correspondence regarding the insurance policies to:

Donna W. Melton
Manager – Insurance
CSX Transportation, Inc.
500 Water Street - C907
Jacksonville, FL 32202
Phone: 904-359-1247
Fax: 904-245-2833

2. Neither Company nor Contractor may begin work on the Project until it has received CSXT's written approval of the required insurance policies.

General Decision Number: DC080001 07/10/2009 DC1

Superseded General Decision Number: DC20070001

State: District of Columbia

Construction Types: Heavy (Heavy and Sewer and Water Line)
and Highway

County: District of Columbia Statewide.

HEAVY CONSTRUCTION PROJECTS (Including Sewer and Water Lines);
HIGHWAY CONSTRUCTION PROJECTS

Modification Number	Publication Date
0	02/08/2008
1	04/18/2008
2	05/02/2008
3	05/09/2008
4	05/30/2008
5	06/06/2008
6	07/04/2008
7	07/18/2008
8	07/25/2008
9	08/15/2008
10	09/05/2008
11	09/12/2008
12	09/19/2008
13	11/07/2008
14	12/19/2008
15	02/20/2009
16	03/20/2009
17	05/01/2009
18	05/29/2009
19	06/05/2009
20	06/12/2009
21	06/19/2009
22	06/26/2009
23	07/03/2009
24	07/10/2009

ASBE0024-001 10/01/2008

	Rates	Fringes
Asbestos Worker/Heat and Frost Insulator Includes the application of all insulating materials, protective coverings, coatings and finishes to all types of mechanical systems	$ 29.18	14.18

ASBE0024-002 10/01/2008

	Rates	Fringes

```
HAZARDOUS MATERIAL HANDLER
     Includes preparation,
     wetting, stripping,
     removal, scrapping,
     vacuuming, bagging and
     disposing of all
     insulation materials,
     whether they contain
     asbestos or not, from
     mechanical systems..........$ 17.85             6.60
-----------------------------------------------------------------
 ASBE0024-005 10/01/2008

                                   Rates          Fringes

Fire Stop Technician.............$ 22.85             6.59

  Includes the application of materials or devices within or
  around penetrations and openings in all rated wall or floor
  assemblies, in order to prevent the pasage of fire, smoke
  of other gases. The application includes all components
  involved in creating the rated barrier at perimeter slab
  edges and exterior cavities, the head of gypsum board or
  concrete walls, joints between rated wall or floor
  components, sealing of penetrating items and blank openings.
-----------------------------------------------------------------
 BOIL0193-001 10/01/2008

                                   Rates          Fringes

Boilermakers:....................$ 36.61            15.46
-----------------------------------------------------------------
 BRDC0001-001 05/04/2009

                                   Rates          Fringes

 Bricklayer......................$ 26.31             7.11
-----------------------------------------------------------------
 CARP0132-001 05/01/2009

                                   Rates          Fringes

Carpenter/Lather................$ 26.38             7.00
Piledriver......................$ 24.48             7.70
-----------------------------------------------------------------
 CARP1831-001 04/01/2009

                                   Rates          Fringes

Carpenters:
     Millwrights................$ 29.39             6.55
-----------------------------------------------------------------
 CARP2311-002 05/01/2009

                                   Rates          Fringes

DIVER TENDER....................$ 24.48             7.80
DIVER...........................$ 36.13             7.80
-----------------------------------------------------------------
 ELEC0026-001 11/03/2008
```

	Rates	Fringes
Electricians	$ 36.65	11.45+a

a. PAID HOLIDAYS: New Year's Day, Martin Luther King Jr.'s Birthday, Inauguration Day, Memorial Day, Fourth of July, Labor Day, Veterans Day, Thanksgiving Day, the day after Thanksgiving and Christmas Day or days designated as legal holidays by the Federal Government.

ELEC0026-008 07/01/2003

	Rates	Fringes
Motor Repairmen		
Removal and reinstallation of electrical motors	$ 23.69	7.73+3%+a

a. PAID HOLIDAYS:
New Year's Day, Martin Luther King Jr.'s Birthday, Inauguration Day, Memorial Day, Fourth of July,Labor Day, Veterans Day,Thanksgiving Day, the day after Thanksgiving and Christmas Day or days designated as legal holidays by the Federal Government.

ELEC0070-001 09/02/2007

	Rates	Fringes
Line Construction:		
Cable Splicers	$ 30.29	19.75%+4.81
Equipment Mechanic	$ 21.82	19.75%+4.81
Equipment Operators	$ 25.78	19.75%+4.81
Groundman/Truck Driver	$ 15.34	19.75%+4.81
Line Truck with Auger	$ 20.09	19.75%+4.81
Linemen	$ 28.86	19.75%+4.81

ENGI0077-001 05/01/2009

	Rates	Fringes
Power equipment operators: (HEAVY AND HIGHWAY CONSTRUCTION)		
GROUP 1	$ 30.89	7.52+a+b
GROUP 2	$ 29.89	7.52+a+b
GROUP 3	$ 29.43	7.52+a
GROUP 4	$ 28.72	7.52+a
GROUP 5	$ 26.69	7.52+a
GROUP 6	$ 22.15	7.52+a
GROUP 7	$ 31.26	7.52+a

POWER EQUIPMENT OPERATORS CLASSIFICATIONS

GROUP 1: Tower Cranes and Cranes 100 ton and over.

GROUP 2: 35 ton cranes & above, tower & climbing cranes, derricks, concrete boom pump, drill rigs (equivalent to L & Double L), mole.

GROUP 3: Backhoes, cableways, cranes, cherry pickers, elevating graders, hoists, paving mixers, power shovels,tunnel shovels. batch plants, shields, tunnel mining machines, gradalls, front end loaders, 3 1/2 cu. yds. and above, power driven wheel scoops and scrapers (50 cu. yds. struck capacity or above), rail tamper, draglines, boomcat, mucking machines, graders in tunnels, pile driving engines.

GROUP 4: Front end loaders below 3 1/2 cu. yds, boom trucks, hydraulic backhoes 1/2 yds. capacity or below rubber or track mounted, tug boats, power driven wheel scoops & scrapers, blade graders, motor graders, bulldozers, trenching machines, concrete mixer, speed swing pettibone, ballast regulator, concrete pump, mechanic, welder, mechanic welder, shotcrete machines, Hoeram, locomotive (standard, narrow gauge), tuggers.

GROUP 5: High lifts above 10 feet, boilers (skelton), asphalt spreaders, bullfloat finishing machines, concrete finishing machines, concrete spreaders, fine graders, air compressors, welding machines, pumps, generators, well points, deep wells, hydraulic pumps, elevators, freeze uniits, tunnel motorman or dinky operator, roller, conveyors, well drilling machines, grout pump, fireman.

GROUP 6: Fork lifts, ditch witch, bobcat 1/3 cu. yd. and below, space heaters, sweepers, assistant engineers, oilers.

GROUP 7: Master mechanic.

a. PAID HOLIDAYS: New Years Day, Inaugural Day, Decoration Day, Independence Day, Labor Day, Martin Luther King's Birthday, Veterans' Day, Thanksgiving Day, Friday after Thanksgiving and Christmas Day.

b. PREMIUM PAY:
Tower crane and cranes 100-ton and over to receive $1.00 per hour premium over Group One.

ENGI0077-002 06/01/2009

	Rates	Fringes
Power equipment operators: (PAVING AND INCIDENTAL GRADING)		
GROUP 1	$ 24.53	6.00
GROUP 2	$ 21.60	6.00
GROUP 3	$ 18.54	6.00
GROUP 4	$ 16.85	6.00
GROUP 5	$ 25.05	5.80

POWER EQUIPMENT OPERATORS CLASSIFICATIONS

GROUP 1: Gradall operator, Crane.

GROUP 2: Boom Truck, Milling Machine, Excavator, Rubber Tire Backhoe, Asphalt Paver, Asphalt Plant Engineer, Motor Grader, Track Loader, Rubber Tire Loader, Track Dozer, Concrete Paver.

GROUP 3: Broom Truck, Asphalt Roller.
GROUP 4: Air Compressor, Grade Rollers.
GROUP 5: Mechanic.

---

* ENGI0077-003 07/01/2009

	Rates	Fringes
Power equipment operators: (SEWER, GAS AND WATER LINE CONSTRUCTION)		
GROUP 1	$ 22.48	6.12+a
GROUP 2	$ 22.08	6.12+a
GROUP 3	$ 21.57	6.12+a
GROUP 4	$ 21.25	6.12+a
GROUP 5	$ 20.43	6.12+a

POWER EQUIPMENT OPERATORS CLASSIFICATIONS

GROUP 1: Excavators, Cranes, Gradalls.

GROUP 2: Backhoes, Front-end Loaders, Fork alift/Lull, Bulldozers, Motor Graders. Qualified Mechanics, Hydraulic Tamper and Hoe Pack, Paving Mixers, Pile Driving Engines, Batch Plant, Concrete Pumps, Low-Boy Driver, Lube Truck.

GROUP 3: Trenching Machine, Well Drilling Machines, Concrete Mixers, Motor Graders, Truck Driver.

GROUP 4. Roller, Air Compressors, Pumps, Welding Machines, Well Points, Firemen.

GROUP 5: Oiler

a.PAID HOLIDAYS: New Year's Day, Inaugural Day, Washington's Birthday, Decoration Day, Independence Day, Labor Day, Veterans Day, Thanksgiving Day, Christmas Day and Martin Luther King's Birthday.

---

* IRON0005-001 06/01/2009

	Rates	Fringes
Ironworkers: Structural, Ornamental and Chain Link Fence	$ 28.83	13.295

IRON0201-001 05/01/2009

	Rates	Fringes
Ironworkers: Reinforcing	$ 25.20	14.33

LABO0657-003 06/01/2009

	Rates	Fringes
Laborers: (HEAVY AND HIGHWAY AND SEWER & WATER LINES		

CONSTRUCTION)

GROUP 1	$ 21.11	5.25
GROUP 2	$ 21.43	5.25
GROUP 3	$ 21.60	5.25
GROUP 4	$ 21.77	5.25
GROUP 5	$ 22.22	5.25
GROUP 6	$ 22.78	5.25
GROUP 7	$ 23.33	5.25
GROUP 8	$ 24.06	5.25

LABORERS CLASSIFICATIONS:

GROUP 1: Carloaders, choker setter, concrete crewman, crushed feeder, demolition laborers, including salvaging all material, loading, cleaning up, wrecking, dumpmen, flagmen, fence erector and installer (other than chain link), including installation and erection of fence, guard rails, medial rails, reference posts, guide posts and right-of-way markers, form strippers, general laborers, railroad track laborers, riprap man, scale man, stake jumper, structure mover, includes foundation, separation, preparation, cribbing, shoring, jacking and unloading of structures, water nozzleman, timber bucker and faller, truck loader, water boys, tool room men.

GROUP 2: Combined air and water nozzleman, cement handler, dope pot fireman (nonmechanical), form cleaning machine, mechanical railroad equipment (includes spiker, puller, tile cleaner, tamper, pipe wrapper, power driven wheelbarrows, operators of hand derricks, towmasters, scootcretes, buggymobiles and similar equipment), tamper or rammer operator, trestle scaffold builders over one tier high, power tool operator (gas, electric or pneumatic), sandblast or gunnite tailhose man, scaffold erector, (steel or wood), vibrator operator (up to 4 feet), asphalt cutter, mortar men, shorer and lagger, creosote material handler, corrosive enamel or equl, paver breaker and jackhammer operators.

GROUP 3: Multi-section pipe layer, non-metallic clay and concrete pipe layer (including caulker, collarman, jointer, rigger and jacker, thermal welder and corrugated metal culvert pipe layer.

GROUP 4: Asphalt block pneumatic cutter, asphalt roller, walker, chainsaw operator with attachment, concrete saw (walking), high scalers, jackhammer operator (using over 6 feet of steel), vibrator operator (4 feet and over), well point installer, air trac operator.

GROUP 5: Asphalt screeder, big drills, cut of the hole drills (1 1/2 " piston or larger), down the hole drills (3 1/2" piston or larger) gunnite or sandblaster nozzleman, asphalt raker, asphalt tamper, form setter, demolition torch operator, shotcrete nozzlemen and potman.

GROUP 6: Powderman, master form setters.

GROUP 7: Brick paver (asphalt block paver, asphalt block sawman, asphalt block grinder, hastings block or similar type)

GROUP 8: Licensed powdermen.

LABO0657-004 06/01/2009

	Rates	Fringes
Laborers: (HAZARDOUS WASTE REMOVAL, EXCEPT ON MECHANICAL SYSTEMS: Preparation for, removing and encapsulation of hazardous materials from non-mechanical systems)		
Skilled Asbestos Abatement Laborers	$ 17.45	5.25
Skilled Toxic and Hazardous Waste Removal Laborers	$ 20.46	5.25

LABO0657-005 06/01/2009

	Rates	Fringes
Laborers: (TUNNEL, RAISE & SHAFT (FREE AIR) FOR HEAVY AND SEWER & WATER LINES CONSTRUCTION)		
GROUP 1	$ 21.84	5.25
GROUP 2	$ 22.50	5.25
GROUP 3	$ 24.18	5.25
GROUP 4	$ 24.89	5.25

LABORERS CLASSIFICATIONS:

GROUP 1: Brakeman, Bull Gang, Dumper, Trackmen, Concrete Man.

GROUP 2: Chuck Tender, Powdermen in Prime House, Form Setters and Movers, Nippers, Cableman, Houseman, Groutman, Bell or Signalman, Top or Bottom Vibrator Operator.

GROUP 3: Miners, Re-Bar Underground, Concrete or Gunnite Nozzlemen, Powdermen, Timbermen and Re-Timbermen, Wood Steel Including Liner plate or Other Support, Material Motorman, Caulkers, Diamond Drill Operators, Riggers, Cement Finishers-Underground, Welders and Burners, Shield Driver, Air Trac Operator, Shotcrete Nozzlemen and Potman.

GROUP 4: Mucking Machine Operator (Air).

LABO0657-006 06/01/2009

	Rates	Fringes
Laborers: (TUNNEL, RAISE AND SHAFT (COMPRESSED AIR) FOR HEAVY CONSTRUCTION ONLY		

Gauge Pressure (Pounds)	Work Period (Hours)		
1-14	7	$ 27.66	5.25
14-18	6	$ 32.55	5.25

FOOTNOTE: On any requirement for air pressure in excess of 18

PSI, work periods and rates should be negotiated at a pre-bid conference.

LABO0657-007 06/01/2007

	Rates	Fringes
Laborers: (PAVING AND INCIDENTAL GRADING)		
Asphalt Raker & Concrete Saw Operator	$ 17.14	4.30
Asphalt Shoveler	$ 16.59	4.30
Asphalt Tammer & Concrete Shoveler	$ 16.84	4.30
Jack Hammer	$ 17.03	4.30
Laborer	$ 16.48	4.30
Sand Setter & Form Setter	$ 17.76	4.30

LABO0657-008 06/01/2009

	Rates	Fringes
LABORERS (BRICK MASONRY WORK)		
Mason Tenders	$ 15.06	5.25
Scaffold Builders, Mortarmen	$ 15.90	5.25

MARB0002-003 05/01/2009

	Rates	Fringes
Marble & Stone Mason Includes Pointing, Caulking and Cleaning of All Types of Masonry, Brick, Stone and Cement Structures	$ 32.63	12.99

MARB0003-001 05/01/2008

	Rates	Fringes
Mosaic & Terrazzo Worker, Tile Layer		
Marble Mason and Tile Layer	$ 25.01	8.82
Terrazzo Worker	$ 25.76	8.82

MARB0003-004 05/01/2008

	Rates	Fringes
Marble, Tile & Terrazzo Finisher	$ 20.15	7.97

PAIN0051-001 06/01/2009

	Rates	Fringes
Painters:		
All Industrial Work	$ 26.68	7.86

```
     Bridges, Heavy Highway,
     Lead Abatement and
     Flame/Thermal Spray.........$ 30.32            7.86
     Commercial and Mold
     Remediation, Painters,
     Wallcovers and Drywall
     Finishers...................$ 24.64            7.86
     Metal Polishing and
     Refinishing.................$ 25.64            7.86
-----------------------------------------------------------------
 PLAS0891-001 05/01/2008

                                   Rates          Fringes

Cement Masons:
     HEAVY CONSTRUCTION ONLY.....$ 27.15            6.47
-----------------------------------------------------------------
 PLAS0891-002 06/01/2007

                                   Rates          Fringes

Cement Masons: (PAVING &
INCIDENTAL GRADING)
     Cement Masons...............$ 17.35            4.35
     Concrete Saw Operators......$ 17.35            4.35
     Form Setters................$ 17.35            4.35
-----------------------------------------------------------------
 PLUM0005-001 08/01/2008

                                   Rates          Fringes

Plumbers........................$ 36.24          13.37+a

  a.  PAID HOLIDAYS:  Labor Day, Veterans' Day, Thanksgiving
  Day and the day after Thanksgiving, Christmas Day,  New
  Year's Day, Martin Luther King's Birthday, Memorial Day and
  the Fourth of July.
-----------------------------------------------------------------
 PLUM0602-005 08/01/2008

                                   Rates          Fringes

Steamfitter, Refrigeration &
Air Conditioning Mechanic........$ 35.12          14.47+a

  a. PAID HOLIDAYS: New Year's Day, Martin Luther King's
  Birthday, Memorial Day, Independence Day, Labor Day,
  Veterans Day, Thanksgiving Day and the day after
  Thanksgiving and Christmas Day.
-----------------------------------------------------------------
 SHEE0100-001 01/01/2009

                                   Rates          Fringes

Sheet Metal Worker..............$ 33.04            12.12
-----------------------------------------------------------------
 TEAM0639-001 06/01/2009

                                   Rates          Fringes
```

Truck drivers: (HEAVY &
HIGHWAY CONSTRUCTION)
Tractor trailer, Low Boy....$ 20.00 2.10+a
Truck Drivers.....$ 18.00 2.00+a

a. VACATION: Employees will receive one (1) week's paid vacation after one (1) year of service.

TEAM0639-005 09/01/2006

	Rates	Fringes
Truck drivers: (PAVING & INCIDENTAL GRADING)		
All paving projects where the grading is incidental to the paving	$ 14.05	3.69

WELDERS - Receive rate prescribed for craft performing operation to which welding is incidental.

==========

Unlisted classifications needed for work not included within the scope of the classifications listed may be added after award only as provided in the labor standards contract clauses (29CFR 5.5 (a) (1) (ii)).

In the listing above, the "SU" designation means that rates listed under the identifier do not reflect collectively bargained wage and fringe benefit rates. Other designations indicate unions whose rates have been determined to be prevailing.

WAGE DETERMINATION APPEALS PROCESS

1.) Has there been an initial decision in the matter? This can be:

* an existing published wage determination
* a survey underlying a wage determination
* a Wage and Hour Division letter setting forth a position on a wage determination matter
* a conformance (additional classification and rate) ruling

On survey related matters, initial contact, including requests for summaries of surveys, should be with the Wage and Hour Regional Office for the area in which the survey was conducted because those Regional Offices have responsibility for the Davis-Bacon survey program. If the response from this initial contact is not satisfactory, then the process described in 2.) and 3.) should be followed.

With regard to any other matter not yet ripe for the formal process described here, initial contact should be with the Branch of Construction Wage Determinations. Write to:

Branch of Construction Wage Determinations
Wage and Hour Division
U.S. Department of Labor
200 Constitution Avenue, N.W.
Washington, DC 20210

2.) If the answer to the question in 1.) is yes, then an interested party (those affected by the action) can request review and reconsideration from the Wage and Hour Administrator (See 29 CFR Part 1.8 and 29 CFR Part 7). Write to:

Wage and Hour Administrator
U.S. Department of Labor
200 Constitution Avenue, N.W.
Washington, DC 20210

The request should be accompanied by a full statement of the interested party's position and by any information (wage payment data, project description, area practice material, etc.) that the requestor considers relevant to the issue.

3.) If the decision of the Administrator is not favorable, an interested party may appeal directly to the Administrative Review Board (formerly the Wage Appeals Board). Write to:

Administrative Review Board
U.S. Department of Labor
200 Constitution Avenue, N.W.
Washington, DC 20210

4.) All decisions by the Administrative Review Board are final.

==========

END OF GENERAL DECISION

CONTRACT ID: KA2009B0183 PROJECT(S): ARA-3207(003) & ARA-3207(004)

CONTRACTOR :_____

LINE NO	ITEM DESCRIPTION	APPROX. QUANTITY AND UNITS	UNIT PRICE DOLLARS	UNIT PRICE CTS	BID AMOUNT DOLLARS	BID AMOUNT CTS
0010	000003 Employee Training	3200.000 HR	.		.	
0020	000506 Unassigned Special Item -EACH - 617029 ABANDON HANDBOX	1.000 EACH	.		.	
0030	000506 Unassigned Special Item -EACH - 617043 TEMP PORT CONC BASE 28 FT STEEL T RAF SIGNAL POLE	1.000 EACH	.		.	
0040	000506 Unassigned Special Item -EACH - 617045 REL. ANY TEMP, PORT,CONCR BASE	2.000 EACH	.		.	
0050	000506 Unassigned Special Item -EACH - 617047 RELOCATE TRAFFIC SIGNAL CONTROLLE R ON TEMPORARY, PORTABLE CONCRETE BASE	2.000 EACH	.		.	
0060	000506 Unassigned Special Item -EACH - 617131 FURNISH AND INSTALL CCTV CAMERA SYSTEM	1.000 EACH	.		.	
0070	000506 Unassigned Special Item -EACH - 617133 RELOCATE CCTV CAMERA SYSTEM	2.000 EACH	.		.	

CONTRACT ID: KA2009B0183 PROJECT(S): ARA-3207(003) & ARA-3207(004)

CONTRACTOR :_____

LINE NO	ITEM DESCRIPTION	APPROX. QUANTITY AND UNITS	UNIT PRICE DOLLARS	UNIT PRICE CTS	BID AMOUNT DOLLARS	BID AMOUNT CTS
0080	000506 Unassigned Special Item -EACH - 617151 INSTALL FOUNDATION FR CCTV CAMERA IN BARRIER AND REMOVE AT END OF PROJECT	1.000 EACH	.		.	
0090	000511 Unassigned Special Item -LS - 000520 PARTNERING COSTS	LUMP	LUMP		.	
0100	000511 Unassigned Special Item -LS - 205009 DEMOLITION	LUMP	LUMP		.	
0110	000511 Unassigned Special Item -LS - 610100 PLANTER SOIL (GROWING MEDIA)	LUMP	LUMP		.	
0120	108002 Progress Photographs	LUMP	LUMP		.	
0130	108004 As-Built Drawings	LUMP	LUMP		.	
0140	200008 Earthwork and Excavation Special Item - LS - 205008 DEMOLITION (BRIDGE)	LUMP	LUMP		.	
0150	202002 Common Excavation	1341.000 CY	.		.	
0160	202004 Hard Surface Pavement Excavation	1700.000 CY	.		.	
0170	204004 Borrow Embankment Fill	1641.000 CY	.		.	

CONTRACT ID: KA2009B0183 PROJECT(S): ARA-3207(003) & ARA-3207(004)

CONTRACTOR :_____

LINE NO	ITEM DESCRIPTION	APPROX. QUANTITY AND UNITS	UNIT PRICE DOLLARS	UNIT PRICE CTS	BID AMOUNT DOLLARS	BID AMOUNT CTS
0180	205002 Structure Excavation	950.000 CY	.		.	
0190	205004 Structure Hard Surface Excavation	15.000 CY	.		.	
0200	206002 Structure Backfill	270.000 CY	.		.	
0210	207002 Trench Excavation and Backfill	380.000 CY	.		.	
0220	207004 Trench Undercut Excavation	40.000 CY	.		.	
0230	207006 Gravel for Trench Undercut	40.000 CY	.		.	
0240	207008 Borrow Trench Backfill	50.000 CY	.		.	
0250	209002 Aggregate Base Course	910.000 CY	.		.	
0260	212991 Test Pit Special Item - EACH - 212003 TEST PIT	12.000 EACH	.		.	
0270	300004 Water and Sewer Service Special Item-EACH- 311063 CLEAN SEWER STRUCTURES	7.000 EACH	.		.	

CONTRACT ID: KA2009B0183 PROJECT(S): ARA-3207(003) & ARA-3207(004)

CONTRACTOR :_____

LINE NO	ITEM DESCRIPTION	APPROX. QUANTITY AND UNITS	UNIT PRICE DOLLARS	UNIT PRICE CTS	BID AMOUNT DOLLARS	BID AMOUNT CTS
0280	300005 Water and Sewer Service Special Item-LF - 311065 CLEAN PCC PIPE	250.000 LF		.		.
0290	309002 Sewer Manhole on Sewer 48 Inch and Less Dia.	45.000 VLF		.		.
0300	309991 Sewer Manhole Special Item - EACH - 309800 CAP INLET AND RESTORE BACK TO ORI GINAL CONDITION	1.000 EACH		.		.
0310	309992 Sewer Manhole Special Item - VLF - 309801 SPECIAL SEWER MANHOLES	18.000 VLF		.		.
0320	310008 Basin Connect PCC Pipe, Class III, 15 Inch	40.000 LF		.		.
0330	310992 Catch Basins Special Item -EACH - 300004 CAP INLET	1.000 EACH		.		.
0340	310992 Catch Basins Special Item -EACH - 310005 DOUBLE WATER QUALITY CONTROL BASIN	3.000 EACH		.		.
0350	310992 Catch Basins Special Item -EACH - 310800 CONVERT CURB INLET INTO GRATE INL ET AND CONVERT BACK	1.000 EACH		.		.
0360	311002 Adjust Sewer-Water-Utility Manhole Frame	16.000 EACH		.		.

CONTRACT ID: KA2009B0183 PROJECT(S): ARA-3207(003) & ARA-3207(004)

CONTRACTOR :_____

LINE NO	ITEM DESCRIPTION	APPROX. QUANTITY AND UNITS		UNIT PRICE DOLLARS	CTS	BID AMOUNT DOLLARS	CTS
0370	311004 Reset Sewer-Water-Utility Manhole Frame	6.000	EACH	.		.	
0380	311020 Manhole Adapter Ring	8.000	EACH	.		.	
0390	313002 Abandon Basin Connecting Pipe	13.000	EACH	.		.	
0400	313004 Abandon Sewer Manhole	3.000	EACH	.		.	
0410	314006 PCC Pipe, Class III, Gasket, 18 Inch	460.000	LF	.		.	
0420	400005 Asphalt Construction Special Item -LF - 403003 PAVEMENT REINFORCING FABRIC FOR C RACK REPAIR	2072.000	LF	.		.	
0430	400007 Asphalt Construction Special Item -SF - 403004 PAVEMENT REINFORCING FABRIC FOR A SPHALT OVERLAY	2302.000	SF	.		.	
0440	402002 Superpave Base Course, 19 mm	1847.000	TON	.		.	
0450	402010 Superpave Surface Course, 9.5 mm	2841.000	TON	.		.	
0460	403002 Tack Coat	5031.000	SY	.		.	

CONTRACT ID: KA2009B0183 PROJECT(S): ARA-3207(003) & ARA-3207(004)

CONTRACTOR :_____

LINE NO	ITEM DESCRIPTION	APPROX. QUANTITY AND UNITS		UNIT PRICE DOLLARS	CTS	BID AMOUNT DOLLARS	CTS
0470	502004 PCC Base for Utility Cuts	176.000	CY	.		.	
0480	504006 PCC Driveway-Alley Entrance, 7 Inch	15.000	SY	.		.	
0490	601006 PCC Directional Island	550.000	CY	.		.	
0500	603014 Underdrain Connect Pipe, 8 Inch	50.000	LF	.		.	
0510	605002 W Beam Guiderail	791.000	LF	.		.	
0520	605016 Guiderail Approach Terminal	2.000	EACH	.		.	
0530	605024 W Beam Terminal Connector W BEAM TERMINAL CONNECTOR	2.000	EACH	.		.	
0540	605038 Remove W Beam/Thrie Beam Guiderail	618.000	LF	.		.	
0550	606002 Pavement Profiling (Milling)	19100.000	SY	.		.	
0560	607010 Chain Link Fence, 12 Ft. Ht.	74.000	LF	.		.	
0570	607038 Remove Existing Chain Link Fence	74.000	LF	.		.	

CONTRACT ID: KA2009B0183 PROJECT(S): ARA-3207(003) & ARA-3207(004)

CONTRACTOR :_____

LINE NO	ITEM DESCRIPTION	APPROX. QUANTITY AND UNITS	UNIT PRICE DOLLARS	UNIT PRICE CTS	BID AMOUNT DOLLARS	BID AMOUNT CTS
0580	608004 PCC Sidewalk, 4 Inch	588.000 SY	.		.	
0590	608024 Brick Sidewalk on PCC Base	80.000 SY	.		.	
0600	609006 PCC Curb and Gutter, 13 to 15 Inch Depth	310.000 LF	.		.	
0610	609068 Furnish and Set 8"x12" Granite Straight Curb	3508.000 LF	.		.	
0620	609070 Furnish and Set 8"x12" Granite Circular Curb, Radius Under 1 0 Ft.	50.000 LF	.		.	
0630	609072 Furnish and Set 8"x12" Granite Circular Curb, Radius 10-100 Ft.	547.000 LF	.		.	
0640	609200 PCC Wheelchair/Bicycle Ramp - New Construction	15.000 EACH	.		.	
0650	609202 PCC Wheelchair/Bicycle Ramp - Existing Construction	8.000 EACH	.		.	
0660	610008 Hydroseed with 4 Inch Topsoil	20.000 SY	.		.	
0670	610020 Sod with 4 Inch Topsoil	2881.000 SY	.		.	

CONTRACT ID: KA2009B0183 PROJECT(S): ARA-3207(003) & ARA-3207(004)

CONTRACTOR :_____

LINE NO	ITEM DESCRIPTION	APPROX. QUANTITY AND UNITS	UNIT PRICE DOLLARS	UNIT PRICE CTS	BID AMOUNT DOLLARS	BID AMOUNT CTS
0680	610060 Mulch	220.000 SY	.		.	
0690	611036 Remove Tree Stumps, All Sizes	2.000 EACH	.		.	
0700	611050 Prune Tree over 36 Inch Dia.	2.000 EACH	.		.	
0710	611999 Tree, Shrub, Vine, & Ground Cover Special Item - EACH - 611160 LIQUIDAMBAR STYRACIFLUA 'CHEROKEE ' 3" CALIPER B&B	38.000 EACH	.		.	
0720	611999 Tree, Shrub, Vine, & Ground Cover Special Item - EACH - 611161 QUERCUS RUBRUM 3" CALIPER B&B	29.000 EACH	.		.	
0730	611999 Tree, Shrub, Vine, & Ground Cover Special Item - EACH - 611162 JUNIPERUS CHINENSIS 'OLD GOLD' 24 " HEIGHT B&B	57.000 EACH	.		.	
0740	611999 Tree, Shrub, Vine, & Ground Cover Special Item - EACH - 611163 JUNIPERUS CONFERA 'SILVER MIST' 2 4" SPREAD B&B	99.000 EACH	.		.	
0750	611999 Tree, Shrub, Vine, & Ground Cover Special Item - EACH - 611164 JUNIPERUS SQUAMATA 'BLUE STAR' 24 " SPREAD B&B	107.000 EACH	.		.	

CONTRACT ID: KA2009B0183 PROJECT(S): ARA-3207(003) & ARA-3207(004)

CONTRACTOR :_____

LINE NO	ITEM DESCRIPTION	APPROX. QUANTITY AND UNITS	UNIT PRICE DOLLARS	UNIT PRICE CTS	BID AMOUNT DOLLARS	BID AMOUNT CTS
0760	611999 Tree, Shrub, Vine, & Ground Cover Special Item - EACH - 611165 PICEA ABIES 'NIDIFORMIS' 24" HEIG HT B&B	11.000 EACH		.		.
0770	611999 Tree, Shrub, Vine, & Ground Cover Special Item - EACH - 611166 PINUS MUGO VAR. PUMIDIO 36" HEIGH T B&B	11.000 EACH		.		.
0780	611999 Tree, Shrub, Vine, & Ground Cover Special Item - EACH - 611167 PINUS THUMBERGII 'THUNDERHEAD' 36 " HEIGHT B&B	18.000 EACH		.		.
0790	611999 Tree, Shrub, Vine, & Ground Cover Special Item - EACH - 611168 THUJA OCCIDENTALIS 'HENZI MIDGET ' 18" HEIGHT B&B	15.000 EACH		.		.
0800	611999 Tree, Shrub, Vine, & Ground Cover Special Item - EACH - 611169 THUJA OCCIDENTALIS 'RHEINGOLD' 24 " HEIGHT B&B	7.000 EACH		.		.
0810	611999 Tree, Shrub, Vine, & Ground Cover Special Item - EACH - 611170 LAGERSTOEMIA INDICA 'POCOMOKE' (S HRUB) 30" HEIGHT B&B	42.000 EACH		.		.

CONTRACT ID: KA2009B0183 PROJECT(S): ARA-3207(003) & ARA-3207(004)

CONTRACTOR :_____

LINE NO	ITEM DESCRIPTION	APPROX. QUANTITY AND UNITS	UNIT PRICE DOLLARS	UNIT PRICE CTS	BID AMOUNT DOLLARS	BID AMOUNT CTS
0820	611999 Tree, Shrub, Vine, & Ground Cover Special Item - EACH - 611171 YUCCA FILAMENTOSA 'BRIGHT EDGE' 3 GALLON HEIGHT CONTAINER	24.000 EACH	.		.	
0830	611999 Tree, Shrub, Vine, & Ground Cover Special Item - EACH - 611172 FESTUCA GLAUCA 1 GALLON	53.000 EACH	.		.	
0840	611999 Tree, Shrub, Vine, & Ground Cover Special Item - EACH - 611173 PANICUM VIRGATUM HEAVY METAL 1 GALLON	23.000 EACH	.		.	
0850	611999 Tree, Shrub, Vine, & Ground Cover Special Item - EACH - 611174 PANICUM VIRGATUM 'SHENANDOAH' 1 GALLON	57.000 EACH	.		.	
0860	611999 Tree, Shrub, Vine, & Ground Cover Special Item - EACH - 611175 DELOSPERMA NUBIGENUM 1 GALLON	30.000 EACH	.		.	
0870	611999 Tree, Shrub, Vine, & Ground Cover Special Item - EACH - 611176 SEDUM ALBUM 1 GALLON	60.000 EACH	.		.	
0880	611999 Tree, Shrub, Vine, & Ground Cover Special Item - EACH - 611177 SEDUM REFLEXUM 1 GALLON	60.000 EACH	.		.	

CONTRACT ID: KA2009B0183 PROJECT(S): ARA-3207(003) & ARA-3207(004)

CONTRACTOR :_____

LINE NO	ITEM DESCRIPTION	APPROX. QUANTITY AND UNITS		UNIT PRICE DOLLARS	CTS	BID AMOUNT DOLLARS	CTS
0890	611999 Tree, Shrub, Vine, & Ground Cover Special Item - EACH - 611178 SEDUM SPECTABILE 1 GALLON	20.000	EACH	.		.	
0900	612002 Mobilization	LUMP	LUMP			.	
0910	614012 Portable Precast PCC Barrier INSTALLATION	6945.000	LF	.		.	
0920	614012 Portable Precast PCC Barrier RELOCATION	2322.000	LF	.		.	
0930	615991 Membrane Waterproofing Special Item -SY- 795001 MEMBRANE WATERPROOFING	1700.000	SY	.		.	
0940	616001 Maintenance of Highway Traffic	LUMP	LUMP			.	
0950	616004 Construction Lane Closing	LUMP	LUMP			.	
0960	616006 Remove Lane Markings	3585.000	SF	.		.	
0970	616008 Temporary Construction Sign Supports	289.000	EACH	.		.	
0980	616012 Construction Warning and Detour Signs	3312.000	SF	.		.	

CONTRACT ID: KA2009B0183 PROJECT(S): ARA-3207(003) & ARA-3207(004)

CONTRACTOR :_____

LINE NO	ITEM DESCRIPTION	APPROX. QUANTITY AND UNITS	UNIT PRICE DOLLARS	UNIT PRICE CTS	BID AMOUNT DOLLARS	BID AMOUNT CTS
0990	616016 Flashing Amber Warning Lights, Type "B"	14.000 EACH	.		.	
1000	616020 Sequential Arrow Boards	5.000 EACH	.		.	
1010	616022 Construction Sign Warning Flags	4.000 EACH	.		.	
1020	616024 Type III PVC Barricade	353.000 EACH	.		.	
1030	616028 Traffic Drums	690.000 EACH	.		.	
1040	616030 Single-Faced White Raised Reflective Pavement Markers RECESSED	271.000 EACH	.		.	
1050	616030 Single-Faced White Raised Reflective Pavement Markers SURFACE MOUNTED	170.000 EACH	.		.	
1060	616032 Single-Faced Yellow Raised Reflective Pavement Markers RECESSED	82.000 EACH	.		.	
1070	616032 Single-Faced Yellow Raised Reflective Pavement Markers SURFACE MOUNTED	10.000 EACH	.		.	
1080	616040 Thermoplastic Pavement Marking, 4 Inch	810.000 LF	.		.	

CONTRACT ID: KA2009B0183 PROJECT(S): ARA-3207(003) & ARA-3207(004)

CONTRACTOR :_____

LINE NO	ITEM DESCRIPTION	APPROX. QUANTITY AND UNITS	UNIT PRICE DOLLARS	UNIT PRICE CTS	BID AMOUNT DOLLARS	BID AMOUNT CTS
1090	616042 Thermoplastic Pavement Marking, 4 Inch Dash	27.000 LF	.		.	
1100	616044 Thermoplastic Pavement Marking, 6 Inch	4940.000 LF	.		.	
1110	616046 Thermoplastic Pavement Marking, 6 Inch Dash	1550.000 LF	.		.	
1120	616048 Thermoplastic Pavement Marking, 8 Inch	30.000 LF	.		.	
1130	616050 Thermoplastic Pavement Marking, 12 Inch	287.000 LF	.		.	
1140	616054 Thermoplastic Pavement Arrow	8.000 EACH	.		.	
1150	616080 Truck Mounted Attenuator	4.000 EACH	.		.	
1160	616090 Construction Zone Attenuator	3.000 EACH	.		.	
1170	616100 Sand-Filled Impact Attenuator Module	117.000 EACH	.		.	
1180	616991 Traffic Control Special Item - LS - 616800 CONSTRUCTION NEWSLETTER	LUMP	LUMP		.	

CONTRACT ID: KA2009B0183 PROJECT(S): ARA-3207(003) & ARA-3207(004)

CONTRACTOR :_____

LINE NO	ITEM DESCRIPTION	APPROX. QUANTITY AND UNITS	UNIT PRICE DOLLARS	UNIT PRICE CTS	BID AMOUNT DOLLARS	BID AMOUNT CTS
1190	616992 Traffic Control Special Item - EACH - 616801 REMOVABLE PREFORMED PAVEMENT ARROW	23.000 EACH		.		.
1200	616992 Traffic Control Special Item - EACH - 616802 REMOVABLE PREFORMED PAVEMENT LETTER	8.000 EACH		.		.
1210	616992 Traffic Control Special Item - EACH - 616803 REPLACE & REPLACE LENSES FROM EXI STING RPMS	10.000 EACH		.		.
1220	616993 Traffic Control Special Item - HR - 616804 COURTESY PATROL SERVICE	3000.000 HR		.		.
1230	616993 Traffic Control Special Item - HR - PORTABLE CHANGEABLE MESSAGE SIGN	12000.000 HR		.		.
1240	616994 Traffic Control Special Item - LF - 616805 VISUAL SCREEN MOUNTED ON TEMP. PC C BARRIER	2120.000 LF		.		.
1250	616994 Traffic Control Special Item - LF - 616806 4" REMOVABLE PREFORMED LINE STRIPING	1002.000 LF		.		.
1260	616994 Traffic Control Special Item - LF - 616807 12" REMOVABLE PREFORMED LINE STRIPING	6928.000 LF		.		.

CONTRACT ID: KA2009B0183 PROJECT(S): ARA-3207(003) & ARA-3207(004)

CONTRACTOR :_____

LINE NO	ITEM DESCRIPTION	APPROX. QUANTITY AND UNITS		UNIT PRICE DOLLARS	CTS	BID AMOUNT DOLLARS	CTS
1270	616994 Traffic Control Special Item - LF - 616808 10" SOLID WHITE PAVE MARKING INLA ID TAPE	425.000	LF		.		.
1280	616994 Traffic Control Special Item - LF - 616809 6" REMOVABLE PREFORMED LINE STRIPING	17729.000	LF		.		.
1290	616994 Traffic Control Special Item - LF - 616810 5" SOLID YELLOW PERMANENT PAVEMAR KING NLAID TAPE	1709.000	LF		.		.
1300	616994 Traffic Control Special Item - LF - 616811 5" WHTE PERM PERFORM PATTERN REF LEC PPPRCP 10' LINE, 30' GAP	79.000	LF		.		.
1310	616994 Traffic Control Special Item - LF - 616812 10" WHITE PERMANENT PATTERNED REFLECTIVE PAVEMENT MARKINGS	150.000	LF		.		.
1320	616994 Traffic Control Special Item - LF - 616813 5" DASH WHITE PERM PAVEMENT MARKI NGS 10' LINE30' GAPINLAID TAPE	2535.000	LF		.		.
1330	616994 Traffic Control Special Item - LF - 616814 5" PAVEMENT MARKINGS (10' LINE, 30' GAP) (NOT INLAID)	230.000	LF		.		.

CONTRACT ID: KA2009B0183 PROJECT(S): ARA-3207(003) & ARA-3207(004)

CONTRACTOR :_____

LINE NO	ITEM DESCRIPTION	APPROX. QUANTITY AND UNITS		UNIT PRICE DOLLARS	CTS	BID AMOUNT DOLLARS	CTS
1340	616994 Traffic Control Special Item - LF - 616815 INSTALL PORTABLE PRECAST PCC BARR IER-SINGLE FACE	98.000	LF	.		.	
1350	616994 Traffic Control Special Item - LF - 616816 5" SOLID WHITE PERMANENT PAVEMENT MARKING INLAID TAPE	1210.000	LF	.		.	
1360	616995 Traffic Control Special Item - SF- 616817 MODIFY EXISTING OVERHEAD SIGN	202.000	SF	.		.	
1370	616995 Traffic Control Special Item - SF- 616818 COVER EXISTING SIGN	134.000	SF	.		.	
1380	617002 Furnish And Install Inductive Loop Detector	256.000	LF	.		.	
1390	617006 Remove Abandoned Traffic Signal Or Street Light Pole Foundation	10.000	EACH	.		.	
1400	617028 Furnish And Install Handbox	1.000	EACH	.		.	
1410	617030 Furnish And Install One 2 Inch And Two 4 Inch Pvc Encased Electrical Conduits	156.000	LF	.		.	
1420	617032 Furnish And Install One 2 Inch And One 4 Inch Pvc Encased Electrical Conduits	299.000	LF	.		.	

CONTRACT ID: KA2009B0183 PROJECT(S): ARA-3207(003) & ARA-3207(004)

CONTRACTOR :_____

LINE NO	ITEM DESCRIPTION	APPROX. QUANTITY AND UNITS	UNIT PRICE DOLLARS	UNIT PRICE CTS	BID AMOUNT DOLLARS	BID AMOUNT CTS
1430	617034 Furnish And Install Four 4 Inch Pvc Encased Electrical Condu its	292.000 LF	.		.	
1440	617038 Furnish And Install PCC Foundation For Controller Cabinet	2.000 EACH	.		.	
1450	617040 Furnish Temporary, Portable, Concrete Base For Model 336-S And Model 336-Ss Traffic Signal Controller Cabinet	2.000 EACH	.		.	
1460	617042 Furnish Temporary, Portable, Concrete Base For 20 Foot Steel Traffic Signal Pole Mounted On A Transformer Base	8.000 EACH	.		.	
1470	617046 Furnish And Install 20 Foot Tall Steel Traffic Signal Pole	19.000 EACH	.		.	
1480	617048 Furnish And Install 8 Foot Long Mast Arm With Clamp And Remo veable End Cap	9.000 EACH	.		.	
1490	617050 Furnish And Install 7 Conductor 14 Awg Stranded Electrical Traffic Signal Cable	5838.000 LF	.		.	
1500	617052 Furnish And Install 4 Conductor 18 Awg Shielded, Stranded Electrical Traffic Signal Cable	180.000 LF	.		.	

CONTRACT ID: KA2009B0183 PROJECT(S): ARA-3207(003) & ARA-3207(004)

CONTRACTOR :_____

LINE NO	ITEM DESCRIPTION	APPROX. QUANTITY AND UNITS	UNIT PRICE DOLLARS	UNIT PRICE CTS	BID AMOUNT DOLLARS	BID AMOUNT CTS
1510	617058 Furnish And Install 25 Pair 19 Awg Underground Communication s Cable	6295.000 LF	.		.	
1520	617060 Furnish And Install 25 Pair 19 Awg Overhead Communications C able	3250.000 LF	.		.	
1530	617068 Furnish Red Ball Led Module	37.000 EACH	.		.	
1540	617070 Furnish Yellow Ball Led Module	37.000 EACH	.		.	
1550	617072 Furnish Green Ball Led Module	37.000 EACH	.		.	
1560	617076 Furnish Yellow Arrow Led Module	4.000 EACH	.		.	
1570	617078 Furnish Green Arrow Led Module	6.000 EACH	.		.	
1580	617084 Furnish 12 Inch Overlay Lunar White Walking Person And Portl and Orange Raised Hand Led Module	25.000 EACH	.		.	
1590	617086 Furnish 12 Inch Portland Orange Countdown Led Module	25.000 EACH	.		.	

CONTRACT ID: KA2009B0183 PROJECT(S): ARA-3207(003) & ARA-3207(004)

CONTRACTOR :_____

LINE NO	ITEM DESCRIPTION	APPROX. QUANTITY AND UNITS	UNIT PRICE DOLLARS	UNIT PRICE CTS	BID AMOUNT DOLLARS	BID AMOUNT CTS
1600	617090 Furnish And Install 3 Section Conventional Traffic Signal He ad On A Pole (All Lenses 12?)	20.000 EACH		.		.
1610	617092 Furnish And Install 4 Section Conventional Traffic Signal He ad On A Pole (All Lanes 12?)	2.000 EACH		.		.
1620	617094 Furnish And Install 5 Section Conventional Traffic Signal He ad On A Pole (All Lenses 12?)	4.000 EACH		.		.
1630	617096 Furnish And Install 3 Section Conventional Traffic Signal He ad On A Mast Arm (All Lenses 12?)	9.000 EACH		.		.
1640	617102 Furnish And Install 3 Section Optically Programmable Traffic Signal Head On A Pole (All Lenses 12?)	2.000 EACH		.		.
1650	617114 Furnish And Install 2 Section Conventional Pedestrian Signal Head On A Pole (12?)	25.000 EACH		.		.
1660	617120 Furnish And Install Microwave Vehicle Detector	1.000 EACH		.		.
1670	617124 Furnish And Install Traffic Signal Controller And Cabinet	2.000 EACH		.		.

CONTRACT ID: KA2009B0183 PROJECT(S): ARA-3207(003) & ARA-3207(004)

CONTRACTOR :_____

LINE NO	ITEM DESCRIPTION	APPROX. QUANTITY AND UNITS	UNIT PRICE DOLLARS	UNIT PRICE CTS	BID AMOUNT DOLLARS	BID AMOUNT CTS
1680	617126 Remove Abandoned Traffic Signal Controller Cabinet Foundation	2.000 EACH	.		.	
1690	617130 REMOVE TRAFFIC SIGNAL POLE AND TRAFFIC SIGNAL EQUIPMENT	3.000 EACH	.		.	
1700	617132 Remove Traffic Signal Controller And Cabinet	2.000 EACH	.		.	
1710	617164 Traffic Sign Panels	475.000 SF	.		.	
1720	618016 Furnish and Install 36" x 36" x 36" Manhole	8.000 EACH	.		.	
1730	618020 Remove Manhole over 24" x 24"	1.000 EACH	.		.	
1740	618022 Furnish and Install 48" x 48" x 48" Manhole	12.000 EACH	.		.	
1750	618072 Furnish and Install 1-2" Schedule 40 Rigid PVC Conduit	523.000 LF	.		.	
1760	618148 Furnish and Install 6-4" Schedule 40 Rigid PVC Conduits (duct bank)	917.000 LF	.		.	
1770	618150 Furnish and Install 6-4" and 1-2" Schedule 40 Rigid PVC Conduits (duct bank)	265.000 LF	.		.	

CONTRACT ID: KA2009B0183 PROJECT(S): ARA-3207(003) & ARA-3207(004)

CONTRACTOR :_____

LINE NO	ITEM DESCRIPTION	APPROX. QUANTITY AND UNITS		UNIT PRICE DOLLARS	CTS	BID AMOUNT DOLLARS	CTS
1780	618152 Furnish and Install 6-4" and 2-2" Schedule 40 Rigid PVC Conduits (duct bank)	120.000	LF	.		.	
1790	618160 Furnish and Install 2-4" Schedule 40 Rigid PVC Conduit (duct bank)	446.000	LF	.		.	
1800	618190 Furnish and Install #10 Stranded Wire	2822.000	LF	.		.	
1810	618200 Install D.C. Furnished #8 Stranded Wire	503.000	LF	.		.	
1820	618202 Furnish and Install #6 Stranded Wire	1929.000	LF	.		.	
1830	618250 Furnish and Install #0000 Stranded Wire	4518.000	LF	.		.	
1840	618292 Furnish and Install #8 Stranded Ground Wire	1561.000	LF	.		.	
1850	618310 Furnish and Install #2 Stranded Ground Wire	1506.000	LF	.		.	
1860	618394 Furnish and Install 15" B.C. Street Light Foundation	35.000	EACH	.		.	
1870	618400 Remove Street Light Pole Foundation	6.000	EACH	.		.	

CONTRACT ID: KA2009B0183 PROJECT(S): ARA-3207(003) & ARA-3207(004)

CONTRACTOR :_____

LINE NO	ITEM DESCRIPTION	APPROX. QUANTITY AND UNITS		UNIT PRICE DOLLARS	CTS	BID AMOUNT DOLLARS	CTS
1880	618436 Furnish and Install 15" B.C Steel Transformer Base	39.000	EACH	.		.	
1890	618486 Furnish and Install #16 Cast Iron Pole	6.000	EACH	.		.	
1900	618544 Furnish 28'-6" Foot Steel Pendant Pole with up to 8' Arm	20.000	EACH	.		.	
1910	618566 Remove Pendant Pole 30 ft. Height or Less	6.000	EACH	.		.	
1920	618668 Remove arm from wood pole up to 8 ft. in Length	29.000	EACH	.		.	
1930	618676 Furnish and Install 8 ft. Arm on Wood Pole	28.000	EACH	.		.	
1940	618720 Remove Luminaire from Wood Pole	29.000	EACH	.		.	
1950	618722 Remove Luminaire from Steel Pole	7.000	EACH	.		.	
1960	618760 Furnish and Install 250 Watt HPS Tear Drop Fixture	14.000	EACH	.		.	
1970	618778 Furnish and Install 400 Watt HPS Tear Drop Fixture	35.000	EACH	.		.	
1980	618802 Furnish and Install 250 Watt HPS Conversion Kit	6.000	EACH	.		.	

CONTRACT ID: KA2009B0183 PROJECT(S): ARA-3207(003) & ARA-3207(004)

CONTRACTOR :_____

LINE NO	ITEM DESCRIPTION	APPROX. QUANTITY AND UNITS	UNIT PRICE DOLLARS	UNIT PRICE CTS	BID AMOUNT DOLLARS	BID AMOUNT CTS
1990	618860 Furnish and Install 118 Plastic Globe	6.000 EACH	.		.	
2000	618888 Furnish and Install 4" PVC Rigid U-Guard on Wood Pole	25.000 LF	.		.	
2010	618896 Furnish and Install 1" PVC Rigid U-Guard on Wood Pole	135.000 LF	.		.	
2020	618930 Furnish Electrical Junction Box	10.000 EACH	.		.	
2030	618991 ELECTRICAL WORK SPECIAL ITEM -LS- 618825 SIGN LIGHTING & COMPLETE SYSTEM	LUMP	LUMP			.
2040	618992 ELECTRICAL WORK SPECIAL ITEM -EACH- 618395 SPEC SPREAD FOOTER STREETLIGHT T RAF SIGNAL POLE	2.000 EACH	.		.	
2050	618992 ELECTRICAL WORK SPECIAL ITEM -EACH- 618757 FURNISH AND INSTALL WALL MOUNTED HPS LUMINAIRE	12.000 EACH	.		.	
2060	618993 ELECTRICAL WORK SPECIAL ITEM -LF- 618071 FURNISH AND INSTALL 5-4" AND 1-2" DIA RIGID PVC CONDUITS	22.000 LF	.		.	
2070	618993 ELECTRICAL WORK SPECIAL ITEM -LF- 618073 FURNISH AND INSTALL 2" RIGID META L CONDUIT	284.000 LF	.		.	

CONTRACT ID: KA2009B0183 PROJECT(S): ARA-3207(003) & ARA-3207(004)

CONTRACTOR :_____

LINE NO	ITEM DESCRIPTION	APPROX. QUANTITY AND UNITS		UNIT PRICE DOLLARS	CTS	BID AMOUNT DOLLARS	CTS
2080	618993 ELECTRICAL WORK SPECIAL ITEM -LF- 618075 F&I 3/4" RIGID METAL CONDUIT	148.000	LF		.		.
2090	618993 ELECTRICAL WORK SPECIAL ITEM -LF- 618149 FURNISH AND INSTALL 6-4" DIA RIGI D METAL CONDUITS	34.000	LF		.		.
2100	618993 ELECTRICAL WORK SPECIAL ITEM -LF- 618151 FURNISH AND INSTALL 6-4" DIA AND 1-2" DIA RIGID METAL CONDUITS	48.000	LF		.		.
2110	618993 ELECTRICAL WORK SPECIAL ITEM -LF- 618161 F&I 8-4" DIA & 1-2" DIA RIGID PVC	26.000	LF		.		.
2120	618993 ELECTRICAL WORK SPECIAL ITEM -LF- 618163 F&I 8-4" DIA RIGID PVC CONDUITS	81.000	LF		.		.
2130	618999 Payment to PEPCO for Connection, Disconnection, Inspection ELECTRICSERVICE TO CONTROLLER CAB AT SIG N LOCATIONS		LUMP	LUMP		5000.00	
2140	618999 Payment to PEPCO for Connection, Disconnection, Inspection PEPC CONNECTION, DISCONNECTINSPFOR TRAFF IC SIGNAL STREETLIGHTS		LUMP	LUMP		22000.00	

CONTRACT ID: KA2009B0183 PROJECT(S): ARA-3207(003) & ARA-3207(004)

CONTRACTOR :_____

LINE NO	ITEM DESCRIPTION	APPROX. QUANTITY AND UNITS	UNIT PRICE DOLLARS	UNIT PRICE CTS	BID AMOUNT DOLLARS	BID AMOUNT CTS
2150	619002 Mechanical Work DRY PIT SUBMERSIBLE PUMP	LUMP	LUMP			.
2160	619991 MECHANICAL WORK SPECIAL ITEM -LS- 619800 PUMPING STATION REHABILITATION	LUMP	LUMP			.
2170	620002 Timber Ground Mounted Sign Posts, 4x4 Inch	53.000 LF		.		.
2180	620004 Timber Ground Mounted Sign Posts, 4x6 Inch	80.000 LF		.		.
2190	620012 Guide Sign Panels	836.000 SF		.		.
2200	620030 Remove Existing Overhead Sign	418.000 SF		.		.
2210	620032 Remove Existing Ground Mounted Sign	226.000 SF		.		.
2220	620036 Reset Guide Sign Panel	292.000 SF		.		.
2230	620040 Federal Aid Project Sign	4.000 EACH		.		.
2240	620991 Traffic Signing Special Item - LF - 620800 S4 X 7.7 STEEL SIGN SUPPORT	26.000 LF		.		.

CONTRACT ID: KA2009B0183 PROJECT(S): ARA-3207(003) & ARA-3207(004)

CONTRACTOR :_____

LINE NO	ITEM DESCRIPTION	APPROX. QUANTITY AND UNITS	UNIT PRICE DOLLARS	UNIT PRICE CTS	BID AMOUNT DOLLARS	BID AMOUNT CTS
2250	620993 Traffic Signing Special Item - EACH - 620801 BREAKAWAY BASE SIGN SUPPORT	2.000 EACH		.		.
2260	621991 Miscellaneous Electrical Work - Special Item 621800 PUMPING STATION REHABILITATION	LUMP	LUMP			.
2270	621991 Miscellaneous Electrical Work - Special Item 621802 UPGRADED ELECTRICAL SERVICE	LUMP	LUMP			.
2280	624002 Engineer's Field Facilities	LUMP	LUMP			.
2290	625002 Field Layout	LUMP	LUMP			.
2300	628002 Erosion and Sediment Control DURING CONSTRUCTION	LUMP	LUMP			.
2310	700002 Structures Construction Special Item - CY - 795002 ASPHALT OVERLAY FOR SUPERSTRUCTURE	150.000 CY		.		.
2320	700005 Structures Construction Special Item - LF - 716015 CONCRETE REPAIR TYPE 3	40.000 LF		.		.

CONTRACT ID: KA2009B0183 PROJECT(S): ARA-3207(003) & ARA-3207(004)

CONTRACTOR :_____

LINE NO	ITEM DESCRIPTION	APPROX. QUANTITY AND UNITS	UNIT PRICE DOLLARS	UNIT PRICE CTS	BID AMOUNT DOLLARS	BID AMOUNT CTS
2330	700009 Structures Construction Special Item - SF - 700100 NON-SHRINK GROUT <1"	20.000 SF	.		.	
2340	700009 Structures Construction Special Item - SF - 716011 CONCRETE REPAIR TYPE 1	300.000 SF	.		.	
2350	700009 Structures Construction Special Item - SF - 716013 CONCRETE REPAIR TYPE 2	150.000 SF	.		.	
2360	700009 Structures Construction Special Item - SF - 716017 CONCRETE REPAIR TYPE 4 - PUMP AND SUMP ROOM	900.000 SF	.		.	
2370	700009 Structures Construction Special Item - SF - 716019 CONCRETE REPAIR TYPE 4 - FIRST FL OOR ROOM	700.000 SF	.		.	
2380	703002 PCC Footing	260.000 CY	.		.	
2390	703002 PCC Footing FOR STEEL SIGN STRUCTURE	16.000 CY	.		.	
2400	703006 PCC Pier-Abutment-Wall	410.000 CY	.		.	
2410	703008 PCC Superstructure	220.000 CY	.		.	

CONTRACT ID: KA2009B0183 PROJECT(S): ARA-3207(003) & ARA-3207(004)

CONTRACTOR :_____

LINE NO	ITEM DESCRIPTION	APPROX. QUANTITY AND UNITS		UNIT PRICE DOLLARS	CTS	BID AMOUNT DOLLARS	CTS
2420	703012 Lightweight PCC Superstructure	430.000	CY	.		.	
2430	703014 PCC Approach Slab	270.000	CY	.		.	
2440	704002 Reinforcing Steel	28760.000	LBS	.		.	
2450	704004 Epoxy Coated Reinforcement Bars	251370.000	LBS	.		.	
2460	706006 Structural Steel - AASHTO M270, Grade 50	367240.000	LBS	.		.	
2470	706020 Bridge Bearings, (Each)	102.000	EACH	.		.	
2480	706991 Structural Steel Special Item - LBS - 706800 STRUCTURAL STEEL	1100.000	LBS	.		.	
2490	706993 Structural Steel Special Item - LS - 706801 HEAVY DUTY EXTERIOR STEEL DOOR	LUMP	LUMP			.	
2500	706993 Structural Steel Special Item - LS - 706802 GRATING 1.5"X0. 25", HEAVY-DUTY ST EEL BAR GRATING	LUMP	LUMP			.	
2510	707002 Paint New Metalwork	LUMP	LUMP			.	

CONTRACT ID: KA2009B0183 PROJECT(S): ARA-3207(003) & ARA-3207(004)

CONTRACTOR :_____

LINE NO	ITEM DESCRIPTION	APPROX. QUANTITY AND UNITS	UNIT PRICE DOLLARS	UNIT PRICE CTS	BID AMOUNT DOLLARS	BID AMOUNT CTS
2520	707010 Epoxy Protective Coating	200.000 SY	.		.	
2530	708002 Stone Masonry, Class A	840.000 CF	.		.	
2540	708011 Reset Stone Masonry	840.000 CF	.		.	
2550	708013 Repoint Stone Masonry	1800.000 LF	.		.	
2560	713002 Steel Sign Structure	LUMP	LUMP			.
2570	717002 Armored Joint with Neoprene Strip Seal	110.000 LF	.		.	
	TOTAL BID					.