Bravo

Bravo

Handbook for Public Playground Safety

U.S. Consumer Product
Safety Commission
Washington, DC 20207

Pub. No. 325

1. INTRODUCTION

1.1 Scope

This handbook presents safety information for public playground equipment in the form of guidelines. Publication of the handbook is expected to promote greater safety awareness among those who purchase, install, and maintain public playground equipment.

"Public" playground equipment refers to equipment for use in the play areas of parks, schools, child care facilities, institutions, multiple family dwellings, restaurants, resorts and recreational developments, and other areas of public use. The recommendations in this handbook address the typical user ages 2 through 12 years.

The handbook is intended for use by parks and recreation personnel, school officials, equipment purchasers and installers, and any other members of the general public concerned with public playground safety such as parents and school groups.

The guidelines are not intended for amusement park equipment, equipment normally intended for sports use, soft contained play equipment, equipment found in water play facilities, or home playground equipment. The guidelines also do not apply to fitness trail exercise equipment intended for adult use, provided that these are not located on or adjacent to a children's playground. Equipment components intended solely for the disabled and modified to accommodate such users are also not covered by these guidelines.

Because many factors may affect playground safety, the U.S. Consumer Product Safety Commission (CPSC) believes that guidelines, rather than a mandatory rule, are appropriate. The guidelines are not a mandatory standard. Therefore, the Commission is not endorsing these guidelines as the sole method to minimize injuries associated with playground equipment. The Commission believes, however, that the recommendations in this handbook will contribute to greater equipment safety.

1.2 Background

These guidelines were first published in a two-volume Handbook for Public Playground Safety in 1981. These were superseded by a single-volume handbook in 1991 which was republished in 1994 with some minor revisions. The safety guidelines in the 1991 handbook were based on recommendations provided to the CPSC by COMSIS Corporation in a March 1990, report [1]*. Falls and head injuries are the leading hazards associated with public playground equipment.

This handbook contains revisions that are based in part on a staff review of recent changes to a voluntary standard for public playground equipment, ASTM F1487 that was first published in 1993 and revised in 1995 [2]. ASTM F1487 contains more technical requirements than this handbook and is primarily intended for use by equipment manufacturers, architects, designers, and any others requiring more technical information. A voluntary standard for home playground equipment, ASTM F1148 [3], contains a number of provisions that are similar to the recommendations in this handbook.

The revisions also are based on inputs from interested parties received during and after a playground safety roundtable meeting held at CPSC in October 1996, and letters received in response to a May 1997 request for comments on the proposed revisions.

Two significant changes in this revision are the criteria used to evaluate certain protrusions to minimize clothing entanglement and a reduction in the use zone (formerly fall zone) around certain pieces of playground equipment. Other changes to the 1994 version of the handbook clarify certain recommendations and reduce conflicts with the ASTM voluntary standard. Noteworthy changes are listed in Appendix E.

1.3 General Discussion

The safety of each individual piece of playground equipment as well as the layout of the entire play area should be considered when evaluating a playground for safety. The installation and maintenance of protective surfacing under and around all equipment is crucial.

Because all playgrounds present some challenge and because children can be expected to use equipment in unintended and unanticipated ways, adult supervision is recommended. The handbook provides some guidance on supervisory practices that adults should follow. Appropriate equipment design, layout, and

Numbers in brackets indicate references that are listed at the end of this handbook.

maintenance, as discussed in this handbook, are essential for increasing public playground safety.

A playground should allow children to develop progressively and test their skills by providing a series of graduated challenges. The challenges presented should be appropriate for age-related abilities and should be ones that children can perceive and choose to undertake.

Preschool and school-age children differ dramatically, not only in physical size and ability, but also in their cognitive and social skills. Therefore, age-appropriate playground designs should accommodate these differences with regard to the type, scale, and the layout of equipment. Recommendations throughout this handbook address the different needs of preschool and school-age children; "preschool-age" refers to children 2 through 5 years, and "school-age" refers to children 5 through 12 years. The overlap between these groups is realistic in terms of playground equipment use, and provides for a margin of safety.

The recommendations in this handbook are based on the assumption that the minimum user will be a 2-year-old child. Therefore, playground equipment fabricated in accordance with these recommendations may not be appropriate for children under 2 years of age.

Playground designers, installers and operators should be aware that The Americans with Disabilities Act of 1990 (ADA) prohibits discrimination on the basis of disability in employment, public services, transportation, public accommodations (including many services operated by private entities) and telecommunications. Title III of the legislation includes within the definition of public accommodation: "a park, zoo, amusement park, or other place of recreation; a school, including nursery schools; a day care center; and a gymnasium, health spa, or other places of exercise or recreation." Specific Federal requirements for accessibility to playgrounds by the disabled are expected to be published in the future. These requirements could necessitate changes to existing playgrounds as well as when new playgrounds are planned or existing playgrounds refurbished.

2. PLAYGROUND INJURIES

The U. S. Consumer Product Safety Commission has long recognized the potential hazards that exist with the use of public playground equipment. A Commission study [4] of playground equipment-related injuries treated in U.S. hospital emergency rooms indicated that the majority resulted from falls from equipment. These were primarily falls to the ground surface below the equipment rather than falls from one part of the equipment to another part.

Other hazard patterns involved impact by swings and other moving equipment, colliding with stationary equipment, and contact with such hazards as protrusions, pinch points, sharp edges, hot surfaces, and playground debris. Fatal injuries reported to the Commission involved falls, entanglement of clothing or other items on equipment such as slides, entanglement in ropes tied to or caught on equipment, head entrapment in openings, impact from equipment tipover or structural failure, and impact by moving swings.

The recommendations in this handbook have been developed to address the hazards that resulted in these playground-related injuries and deaths. The recommendations include those which address the potential for falls from and impact with equipment, the need for protective surfacing under and around equipment, openings with the potential for head entrapment, the scale of equipment and other design features related to user age, layout of equipment on a playground, installation and maintenance procedures, and general hazards presented by protrusions, sharp edges, and pinch points.

3. DEFINITIONS

Composite Structure — Two or more play structures, attached or directly adjacent, to create one integral unit that provides more than one play activity (e.g., combination climber, slide, and horizontal ladder).

Critical Height — The fall height below which a life-threatening head injury would not be expected to occur.

Designated Play Surface — Any elevated surface for standing, walking, sitting or climbing, or a flat surface greater than 2 inches wide having an angle less than 30° from horizontal.

Embankment Slide — A slide that follows the contour of the ground and at no point is the bottom of the chute greater than 12 inches above the surrounding ground.

Entrapment — Any condition that impedes withdrawal of a body or body part that has penetrated an opening.

Footing — A means for anchoring playground equipment to the ground.

Guardrail — An enclosing device around an elevated platform that is intended to prevent inadvertent falls from the platform.

Infill — Material(s) used in a protective barrier to prevent a user from passing through the barrier e.g., vertical bars, lattice, solid panel, etc.

Loose-Fill Surfacing Material — A material used for protective surfacing in the use zone that consists of loose particles such as sand, gravel, wood fibers, or shredded rubber.

Non-Rigid Component — A component of playground equipment that significantly deforms or deflects during the normal use of the equipment.

Preschool-Age Children — Children 2 years of age through 5 years of age.

Protective Barrier — An enclosing device around an elevated platform that is intended to prevent both inadvertent and deliberate attempts to pass through the barrier.

Protective Surfacing — Surfacing material in the use zone that conforms to the recommendations in Section 4.5 of this handbook.

Roller Slide — A slide that has a chute consisting of a series of individual rollers over which the user travels.

School-Age Children — Children 5 years of age through 12 years of age.

Slide Chute — The inclined sliding surface of a slide.

Stationary play equipment — Any play structure which does not move or does not have components that move during its intended use.

Tot Swing — A swing generally appropriate for children under 4 years of age that provides support on all sides of the occupant.

Tube Slide — A slide in which the chute consists of a totally enclosed tube or tunnel.

Unitary Surfacing Material — A manufactured material used for protective surfacing in the use zone that may be rubber tiles, mats or a combination of rubber-like materials held in place by a binder that may be poured in place at the playground site and cures to form a unitary shock absorbing surface.

Upper Body Equipment — Equipment designed to support a child by the hands only (e.g., horizontal ladder, overhead swinging rings).

Use Zone — The surface under and around a piece of equipment onto which a child falling from or exiting from the equipment would be expected to land.

4. SURFACING

The surface under and around playground equipment can be a major factor in determining the injury-causing potential of a fall. A fall onto a shock absorbing surface is less likely to cause a serious injury than a fall onto a hard surface. Because head impact injuries from a fall have the potential for being life threatening, the more shock absorbing a surface can be made, the greater is the likelihood of reducing severe injuries. However, it should be recognized that some injuries from falls will occur no matter what playground surfacing material is used.

4.1 Determining Shock Absorbency of a Surfacing Material

No data are available to predict precisely the threshold tolerance of the human head to an impact injury. However, biomedical researchers have established two methods that may be used to determine when such an injury may be life threatening.

One method holds that if the peak deceleration of the head during impact does not exceed 200 times the acceleration due to gravity (200 G's), a life threatening head injury is not likely to occur. The second method holds that both the deceleration of the head during impact and the time duration over which the head decelerates to a halt are significant in assessing head impact injury. This latter method uses a mathematical

formula to derive a value known as Head Injury Criteria (HIC) [5]. Head impact injuries are not believed to be life threatening if the HIC does not exceed a value of 1,000.

The most widely used test method for evaluating the shock absorbing properties of a playground surfacing material is to drop an instrumented metal headform onto a sample of the material and record the acceleration/time pulse during the impact. Test methods are described in an ASTM Standard Specification for Impact Attenuation of Surface Systems Under and Around Playground Equipment, ASTM F1292 [6].

4.2 Critical Height

This is a term originating from Europe and is used to describe the shock absorbing performance of a surfacing material. As used in this publication, the Critical Height for a surfacing material is defined as the maximum height from which the instrumented metal headform, upon impact, yields both a peak deceleration of no more than 200 G's and a HIC of no more than 1,000 when tested in accordance with the procedure described in ASTM F1292. Therefore, the Critical Height of a surfacing material can be considered as an approximation of the fall height below which a life-threatening head injury would not be expected to occur.

The surfacing material used under and around a particular piece of playground equipment should have a Critical Height value of at least the height of the highest designated play surface on the equipment. This height is the fall height for the equipment.

4.3 Fall Heights for Equipment

Recommendations for the fall heights for various pieces of playground equipment are as follows.

Climbers and Horizontal Ladders — The fall height is the maximum height of the structure.

Elevated Platforms Including Slide Platforms — The fall height is the height of the platform.

Merry-Go-Rounds — The fall height is the height above the ground of any part at the perimeter on which a child may sit or stand.

See-Saws — The fall height is the maximum height attainable by any part of the see-saw.

Spring Rockers — The fall height is the maximum height above the ground of the seat or designated play surface.

Swings — Since children may fall from a swing seat at its maximum attainable angle (assumed to be 90° from the "at rest" position), the fall height of a swing structure is the height of the pivot point where the swing's suspending elements connect to the supporting structure.

4.4 Equipment to Which Protective Surfacing Recommendations Do Not Apply

Equipment that requires a child to be standing or sitting at ground level during play is not expected to follow the recommendations for resilient surfacing. Examples of such equipment are sand boxes, activity walls, play houses or any other equipment that has no elevated designated playing surface.

4.5 Acceptability of Various Surfacing Materials

Hard surfacing materials, such as asphalt or concrete, are unsuitable for use under and around playground equipment of any height unless they are required as a base for a shock absorbing unitary material such as a rubber mat. Earth surfaces such as soils and hard packed dirt are also not recommended because they have poor shock absorbing properties. Similarly, grass and turf are not recommended because wear and environmental conditions can reduce their effectiveness in absorbing shock during a fall.

Acceptable playground surfacing materials are available in two basic types, unitary or loose-fill.

Unitary Materials — are generally rubber mats or a combination of rubber-like materials held in place by a binder that may be poured in place at the playground site and then cured to form a unitary shock absorbing surface. Unitary materials are available from a number of different manufacturers, many of whom have a range of materials with differing shock absorbing properties. Persons wishing to install a unitary material as a playground surface should request test data from the manufacturer identifying the Critical Height of the desired material. In addition, site requirements should

TABLE 1 — CRITICAL HEIGHTS (in feet) OF TESTED MATERIALS

MATERIAL	UNCOMPRESSED DEPTH			COMPRESSED DEPTH
	6 inch	9 inch	12 inch	9 inch
Wood Chips*	7	10	11	10
Double Shredded Bark Mulch	6	10	11	7
Engineered Wood Fibers**	6	7	>12	6
Fine Sand	5	5	9	5
Coarse Sand	5	5	6	4
Fine Gravel	6	7	10	6
Medium Gravel	5	5	6	5
Shredded Tires***	10-12	N/A	N/A	N/A

* This product was referred to as Wood Mulch in previous versions of this handbook. The term Wood Chips more accurately describes the product.

** This product was referred to as Uniform Wood Chips in previous versions of this handbook. In the playground industry, the product is more commonly known as Engineered Wood Fibers.

*** This data is from tests conducted by independent testing laboratories on a 6 inch depth of uncompressed shredded tire samples produced by four manufacturers. The tests reported critical heights which varied from 10 feet to greater than 12 feet. It is recommended that persons seeking to install shredded tires as a protective surface request test data from the supplier showing the critical height of the material when it was tested in accordance with ASTM F1292.

be obtained from the manufacturer because, as stated above, some unitary materials require installation over a hard surface while some do not.

Loose-Fill Materials — can also have acceptable shock absorbing properties when installed and maintained at a sufficient depth. These materials include, but are not confined to, sand, gravel, shredded wood products and shredded tires. Loose-fill materials should not be installed over hard surfaces such as asphalt or concrete.

Because loose-fill materials are generally sold for purposes other than playground surfacing, many vendors are unlikely to be able to provide information on the materials' shock absorbing performance. For that reason, CPSC has conducted tests to determine the relative shock absorbing properties of some loose-fill materials commonly used as surfaces under and around playground equipment. Appendix D contains a description of the tested materials. The tests were conducted in accordance with the procedure in the voluntary standard for playground surfacing systems, ASTM F1292. Table 1, above, lists the critical height (expressed in feet) for each of eight materials when tested in an uncompressed state at depths of 6, 9, and 12 inches. The table also reports the critical height when a 9 inch depth of each material was tested in a compressed state.

Table 1 should be read as follows: If, for example, uncompressed wood chips is used at a minimum depth of 6 inches, the Critical Height is 7 feet. If 9 inches of uncompressed wood chips is used, the Critical height is 10 feet. It should be noted that, for some materials, the Critical Height decreases when the material is compressed.

The Critical Heights shown in the above table may be used as a guide in selecting the type and depth of loose-fill materials that will provide the necessary safety for equipment of various heights. There may be other loose-fill materials such as bark nuggets that have shock absorbing properties equivalent to those in the above table. However, CPSC has not conducted any tests on these materials.

The depth of any loose fill material could be reduced during use resulting in different shock-absorbing

properties. For this reason, a margin of safety should be considered in selecting a type and depth of material for a specific use. When loose-fill materials are used, it is recommended that there be a means of containment around the perimeter of the use zone. Also, depending on playground location, weather conditions and frequency of use, frequent maintenance may be necessary to insure adequate depth and to loosen the materials which may have become packed (see additional maintenance discussion in Appendix C).

Installers of playground equipment are encouraged to attach markers to the equipment support posts that indicate the correct level of loose-fill protective surfacing material under and around the equipment. Such markers will assist maintenance workers in determining when replenishment of the material is necessary.

4.6 Other Characteristics of Surfacing Materials

Selection of a surfacing material for a specific location may be governed by the environmental conditions at that location. Appendix C lists some characteristics of surfacing materials that may influence the choice for a particular playground.

5. USE ZONES FOR EQUIPMENT

The use zone is an area under and around the equipment where protective surfacing is required. Other than the equipment itself, the use zone should be free of obstacles that children could run into or fall on top of and thus be injured.

5.1 Recommendations for Use Zones for Different Types of Playground Equipment

5.1.1 Stationary Equipment (excluding slides)

The use zone should extend a minimum of 6 feet in all directions from the perimeter of the equipment.

The use zones of two stationary pieces of playground equipment that are positioned adjacent to one another may overlap if the adjacent designated play surfaces of each structure are no more than 30 inches above the protective surface (i.e., they may be located a minimum distance of 6 feet apart). If adjacent designated play surfaces on either structure exceed a height of 30 inches, the minimum distance between the structures should be 9 feet.

5.1.2 Slides

The use zone in front of the access and to the sides of a slide should extend a minimum of 6 feet from the perimeter of the equipment. Note: This does not apply to embankment slides. However, the following recommendation applies to all slides, including embankment slides.

The use zone in front of the exit of a slide should extend a minimum distance of H + 4 feet where H is the vertical distance from the protective surface at the exit to the highest point of the chute (see Figure 1). However, no matter what the value of H is, the use zone should never be less than 6 feet but does not need to be greater than 14 feet. The use zone should be measured from a point on the slide chute where the slope is less than 5° from the horizontal. If it cannot be determined where the slope is less than 5° from the horizontal, the use zone should be measured from the end of the chute.

The use zone in front of the exit of a slide should never overlap the use zone of any other equipment.

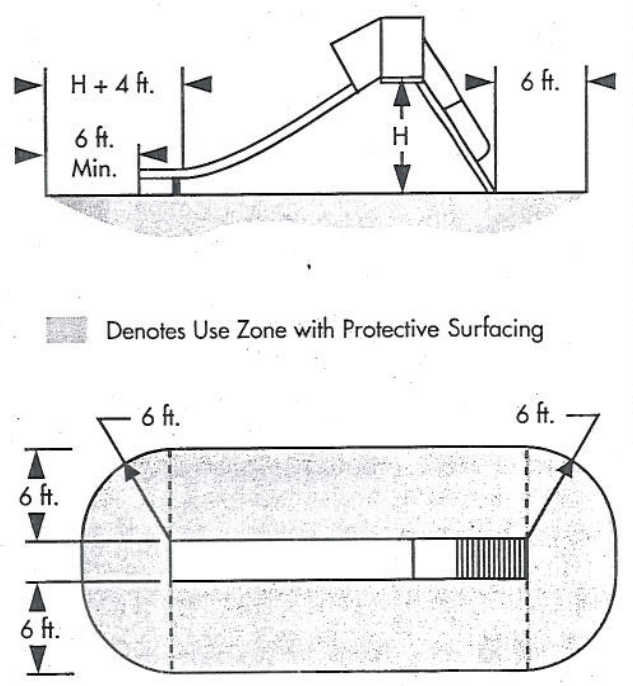

Figure 1. Use Zone for Slides

5.1.3 Single-Axis Swings

Because children may deliberately attempt to exit from a single-axis swing while it is in motion, the use zone in front of and behind the swing should be greater than to the sides of such a swing. It is recommended that the use zone extend to the front and rear of a single-axis swing a minimum distance of twice the height of the pivot point above the surfacing material measured from a point directly beneath the pivot on the supporting structure (see Figure 2). The use zone to the sides of a single-axis swing should follow the general recommendation and extend a minimum of 6 feet from the perimeter of the swing structure in accordance with the general recommendation for use zones. This 6 foot zone may overlap that of an adjacent swing structure.

The use zone to the front and rear of tot swings should extend a minimum distance of twice the height of the pivot point measured from a point directly beneath the pivot to the lowest point on the occupant seating surface when the swing is occupied.

The use zone to the front and rear of single-axis swings should never overlap the use zone of any other equipment.

5.1.4 Multi-Axis Swings

The use zone should extend in any direction from a point directly beneath the pivot point for a minimum distance of 6 feet + the length of the suspending members (see Figure 3). This use zone should never overlap the use zone of any other equipment. In addition, the use zone should extend a minimum of 6 feet from the perimeter of the supporting structure. This 6 foot zone may overlap that of an adjacent swing structure or other playground equipment structure in accordance with the recommendations in Section 5.1.1.

5.1.5 Merry-Go-Rounds

The use zone should extend a minimum of 6 feet beyond the perimeter of the platform. This use zone should never overlap the use zone of any other equipment.

5.1.6 Spring Rockers

The use zone should extend a minimum of 6 feet from the "at rest" perimeter of the equipment.

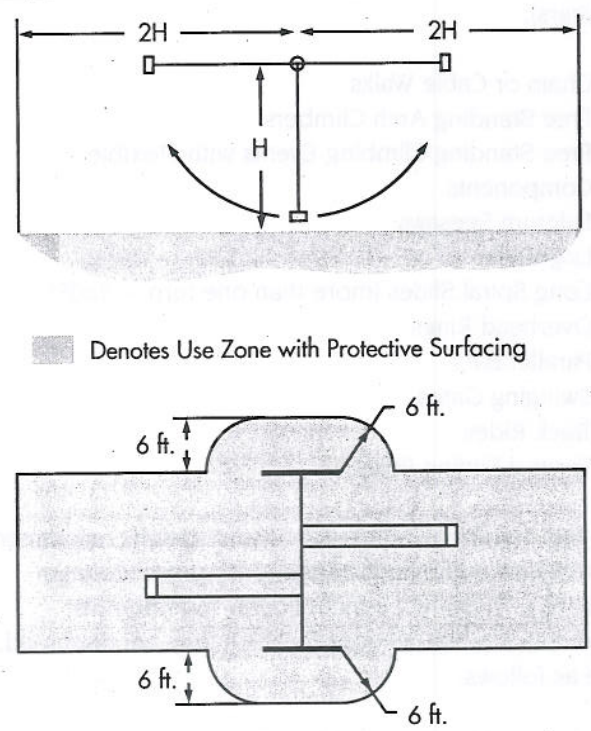

Figure 2. Use Zone for Single-Axis Swings

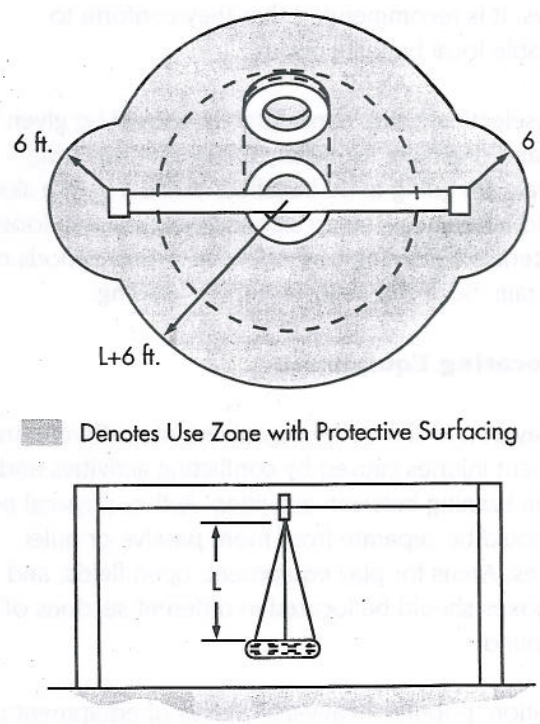

Figure 3. Use Zone for Multi-Axis Swings

5.1.7 Composite Play Structures

The above recommendations for individual pieces of equipment should be used as a guide in establishing the use zone around the perimeter of a composite play structure. Note that in Sections 12.6.2 and 12.6.4 it is recommended that swings not be attached to a composite structure.

In playgrounds where occasional overcrowding is likely, a supplemental circulation area beyond the use zone is recommended. Whether to provide such a supplemental circulation area should be based on the professional judgement of the playground designer and/or owner/operator.

6. LAYOUT AND DESIGN OF PLAYGROUNDS

6.1 Choosing a Site

When planning a new playground, it is important to consider hazards or obstacles to children traveling to or from the playground. A barrier surrounding the playground is recommended if children may inadvertently run into a street. Such a barrier should not prevent observation by supervisors. If fences are used for such barriers, it is recommended that they conform to applicable local building codes.

When selecting a site, consideration should be given to slope and drainage, especially if loose-fill surfacing materials are going to be installed. While a gentle slope may aid in drainage, steep slopes could result in loose fill materials becoming washed away during periods of heavy rain. Such sites may require re-grading.

6.2 Locating Equipment

The playground should be organized into different areas to prevent injuries caused by conflicting activities and children running between activities. Active, physical activities should be separate from more passive or quiet activities. Areas for play equipment, open fields, and sand boxes should be located in different sections of the playground.

In addition, popular, heavy-use pieces of equipment or activities should be dispersed to avoid crowding in any one area. The layout of equipment and activity areas should be without visual barriers so that there are clear sight lines everywhere on the playground to facilitate supervision.

Moving equipment, such as swings and merry-go-rounds, should be located toward a corner, side or edge of the play area while ensuring that the use zones around the equipment, as recommended in Section 5, are maintained. Slide exits should be located in an uncongested area of the playground. Use zones for moving equipment, such as swings and merry-go-rounds, and at slide exits should not overlap the use zone of other equipment, regardless of height.

Composite play structures have become increasingly popular on public playgrounds. Care should be taken to ensure that the play and traffic patterns of children using adjacent components on composite structures are complementary.

6.3 Age Separation of Equipment

It is recommended that for younger children, playgrounds have separate areas with appropriately sized equipment and materials to serve their developmental levels. The following items of playground equipment are not recommended for preschool-age children (2 through 5 years):

- Chain or Cable Walks
- Free Standing Arch Climbers
- Free Standing Climbing Events with Flexible Components
- Fulcrum Seesaws
- Log Rolls
- Long Spiral Slides (more than one turn — 360°)
- Overhead Rings
- Parallel Bars
- Swinging Gates
- Track Rides
- Vertical Sliding Poles

In this handbook, there are several specific recommendations for equipment designed for preschool-age children. These recommendations, together with references to the sections in which they are discussed, are as follows:

- Rung Ladders, Stepladders, Stairways and Ramps (Table 2)

- Handrail Height (10.3.1)
- Guardrails and Protective Barriers (11.3, 11.4, and 11.5)
- Stepped Platforms (11.7)
- Climbers (12.1.2)
- Horizontal Ladders and Overhead Rings (12.1.5)
- Merry-Go-Rounds (12.2)
- Spring Rockers (12.5)
- Single-Axis Swings (12.6.2)
- Tot Swings (12.6.3)

The intended user group should be obvious from the design and scale of equipment. Some playgrounds, often referred to as "tot lots," are designed only for preschool-age children, so separation is not an issue.

In playgrounds intended to serve children of all ages the layout of pathways and the landscaping of the playground should show the distinct areas for the different age groups. The areas should be separated at least by a buffer zone, which could be an area with shrubs or benches. Signs posted in the playground area can be used to give some guidance to adults as to the age appropriateness of the equipment.

6.4 Supervision

Playgrounds that are designed, installed and maintained in accordance with safety guidelines and standards can still present hazards to children in the absence of adequate supervision.

Depending on the location and nature of the playground, the supervisors may be paid professionals (full-time park or school/child care facility staff), paid seasonal workers (college or high school students), volunteers (PTA members), or the parents of the children playing in the playground. The quality of the supervision depends on the quality of the supervisor's knowledge of safe play behavior. Therefore, supervisors should understand the basics of playground safety.

Playground supervisors should be aware that not all playground equipment is appropriate for all children who may use the playground. Supervisors should look for posted signs indicating the appropriate age of the users and direct children to equipment appropriate for their age. Supervisors may also use the information in Section 6.3 of this handbook to determine the suitability of the equipment for the children they are supervising.

It is important to recognize that preschool-age children require more attentive supervision on playgrounds than older children.

7. INSTALLATION AND MAINTENANCE OF EQUIPMENT

7.1 Assembly and Installation

Proper assembly and installation of playground equipment are crucial for structural integrity, stability, and overall safety. The people who assemble and install playground equipment should not deviate from the manufacturer's instructions. After assembly and before its first use, equipment should be thoroughly inspected by a person qualified to inspect playgrounds for safety.

The manufacturer's assembly and installation instructions, and all other materials collected concerning the equipment, should be kept in a permanent file.

7.1.1 Stability

When properly installed as directed by the manufacturer's instructions and specifications, equipment should withstand the maximum anticipated forces generated by active use which might cause it to overturn, tip, slide, or move in any way. Secure anchoring is a key factor to stable installation, and because the required footing sizes and depths may vary according to equipment type, the anchoring process should be completed in strict accordance with the manufacturer's specifications.

7.2 Maintenance

Inadequate maintenance of equipment has resulted in injuries on playgrounds. Because the safety of playground equipment and its suitability for use depend on good inspection and maintenance, the manufacturer's maintenance instructions and recommended inspection schedules should be strictly followed.

A comprehensive maintenance program should be developed for each playground. All equipment should be inspected frequently for any potential hazards, for corrosion or deterioration from rot, insects, or weathering. The playground area should also be checked frequently for broken glass or other dangerous debris. Loose-fill surfacing materials should be inspected to

insure they have not become displaced or compacted in high traffic areas such as under swings and at slide exits. Any damage or hazards detected during inspections should be repaired immediately in accordance with the manufacturer's instructions for repair and replacement of parts.

For each piece of equipment, the frequency of thorough inspections will depend on the type of equipment, the amount of use, and the local climate. Based on the manufacturer's recommendations regarding maintenance schedules for each piece of equipment, a maintenance schedule for the entire playground can be created. The detailed inspections should give special attention to moving parts and other components which can be expected to wear. Inspections should be carried out in a systematic manner by trained personnel.

One possible procedure is the use of checklists. Some manufacturers supply checklists for general or detailed inspections with their maintenance instructions. These can be used to ensure that inspections are in compliance with the manufacturer's specifications. Inspections alone do not constitute a comprehensive maintenance program. All hazards or defects identified during inspections should be repaired promptly. All repairs and replacements of equipment parts should be completed in accordance with the manufacturer's instructions. A general checklist that may be used as a guide for frequent routine inspections of public playgrounds is included at Appendix A. This is intended to address only general maintenance concerns. It does not provide a complete safety evaluation of a specific equipment design and layout. For example, it does not address the risk of falls from equipment, moving impact incidents, or head entrapment. Therefore, the use of this checklist is only for general maintenance purposes. The detailed design recommendations contained in this handbook can be used to evaluate the safety of each piece of equipment and the playground as a whole.

Records of all maintenance inspections and repairs should be retained, including the manufacturer's maintenance instructions and any checklists used. When an inspection is performed, the person performing it should sign and date whatever form is used. A record of any accident and injury reported to have occurred on the playground should also be retained. This will help identify potential hazards or dangerous design features that should be corrected.

8. MATERIALS OF MANUFACTURE AND CONSTRUCTION

8.1 Durability and Finish

Purchasers should be sure that the equipment is manufactured and constructed only of materials that have a demonstrated record of durability in the playground or similar outdoor setting. Any new materials should be documented or tested accordingly for durability by the playground equipment manufacturer.

A major concern for playground equipment materials is corrosion or deterioration. Metals should be painted, galvanized, or otherwise treated to prevent rust.

All paints and other similar finishes must meet the current CPSC regulation for lead in paint [**7**] (0.06% [600 ppm] maximum lead by dry weight). The manufacturer should ensure that, as a result of contact with playground equipment, the users cannot ingest, inhale, or absorb potentially hazardous amounts of preservative chemicals or other treatments applied to the equipment. Purchasers and installers of playground equipment should obtain documentation from the manufacturer that the preservatives or other treatments that have been used do not present a health hazard to the users.

Testing by CPSC and various state and local agencies revealed that some older playground equipment in schools, parks, and communities across the U.S. has leaded paint that over time has deteriorated. When playground equipment paint deteriorates, the resulting chips and dust may be ingested by young children who regularly touch the equipment while playing and then transfer the paint chips or dust from their hands to their mouths. The amount of paint that may be ingested can contribute to a hazardous and unnecessarily high lead exposure.

A strategy for identifying and controlling leaded paint on playground equipment is available from CPSC. A case-by-case approach is recommended since there are many factors to consider when developing a hazard assessment and plans for appropriate controls. Playground managers should consult an October 1996 report, CPSC Staff Recommendations for Identifying and Controlling Lead Paint on Public Playground Equipment [**8**].

Wood should either be naturally rot and insect-resistant or treated to avoid such deterioration. The most common wood treatments used in playground equipment are the inorganic arsenicals. Chromated copper arsenate (CCA) is acceptable for use as a treatment of playground equipment wood, if the dislodgeable arsenic (arsenic that might be removable from the wood surface by skin contact or wiping with testing materials) on the surface of the wood is minimized. Inorganic arsenicals should be applied by the manufacturer or wood preserver in accordance with the specifications of the American Wood Preservers Association C17 standard. This standard states that the treated wood should be visibly free of residues which may contain high levels of arsenic (the greenish coloration of CCA treated wood is acceptable). Wood preservers and playground equipment manufacturers should practice technologies and procedures that minimize the level of dislodgeable arsenic. CPSC has found that technology and practices exist to treat playground equipment wood with CCA so that dislodgeable arsenic is below detectable levels [**9**].

Installers, builders, and consumers who perform woodworking operations such as sanding, sawing, or sawdust disposal on pressure treated wood should read the consumer information sheet often available at the point of sale [**10**]. The sheet contains important health precautions and disposal information. Creosote, petachlorophenol, and tributyl tin oxide are too toxic or irritating and should not be used as preservatives for playground equipment wood. Pesticide-containing finishes should also not be used. Other preservatives that have low toxicity and may be suitable for playground equipment wood are copper or zinc naphthenates, and borates.

8.2 Hardware

When installed and tightened in accordance with the manufacturer's instructions, all fasteners, connectors and covering devices should not loosen or be removable without the use of tools. Lock washers, self-locking nuts, or other locking means should be provided for all nuts and bolts to protect them from detachment. Hardware in moving joints should also be secured against unintentional or unauthorized loosening. In addition, all fasteners should be corrosion resistant and be selected to minimize corrosion of the materials they connect. Bearings used in moving joints should be easy to lubricate or be self-lubricating. All hooks, including S-hooks, should be closed (see also Section 12.6.1). A hook is considered closed if there is no gap or space greater than 0.04 inches. It is appropriate to measure this gap with a feeler gauge but, in the absence of such a gauge, the gap should not admit a dime.

8.3 Metal Surfaces

To avoid the risk of contact burn injury, bare or painted metal surfaces on platforms and slide beds should be avoided unless they can be located out of direct sun. Alternatively, platforms may be wood, plastic or vinyl coated metal and slide beds may be plastic (see also Slides in Section 12.4.4).

9. GENERAL HAZARDS

There are a variety of general hazards common to many types of playground equipment. The guidelines in this section apply to all elements of the playground.

9.1 Sharp Points, Corners, and Edges

There should be no sharp points, corners, or edges on any components of playground equipment that could cut or puncture children's skin. Frequent inspections are important to prevent injuries caused by sharp points, corners, or edges that could develop as a result of wear and tear on the equipment. The exposed open ends of all tubing not resting on the ground or otherwise covered should be covered by caps or plugs that cannot be removed without the use of tools.

Wood parts should be smooth and free from splinters. All corners, metal and wood, should be rounded. All metal edges should be rolled or have rounded capping. There should be no sharp edges on slides. Metal edges on the exit end and the sides along a slide bed can result in serious lacerations if protective measures are not taken (see also Section 12.4.5).

9.2 Protrusions and Projections

⚠ **WARNING:** Children have died when hood or neck drawstrings on their jackets or sweatshirts caught on slides or other playground equipment. Parents are advised to remove hood and neck drawstrings from clothing to prevent entanglement and strangulation.

Protrusions or projections on playground equipment should not be capable of entangling children's clothing, because such entanglement can cause death by strangulation. Particular attention should be given to avoid protrusions or projections on slides to minimize the risk of entanglement with clothing. Jackets and sweatshirts with hoods and/or drawstrings have been involved in such entanglement/strangulation incidents. Jewelry, such as necklaces and rings, has also resulted in injuries from entanglement. The diameter of a protrusion should not increase in the direction away from the surrounding surface towards the exposed end (see Figure 4).

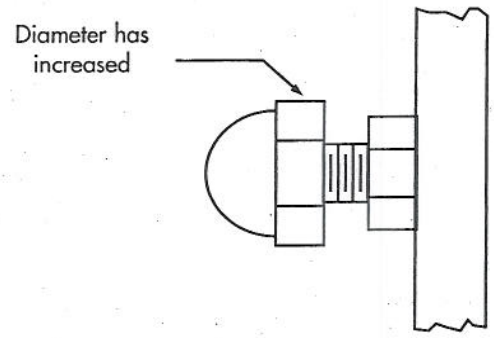

Figure 4. Protrusion Increases in Diameter From Plane of Initial Surface

When tested in accordance with the procedure in Paragraph 9.2.1, no protrusion should extend beyond the face of any of the three gauges having dimensions shown in Figure 5. These gauges may be purchased from the National Recreation and Park Association (NRPA) [**12**].

9.2.1 Protrusion Test Procedure

Successively place each gauge (see Figure 5) over any protrusion or projection and determine if it projects beyond the face of the gauge (see Figure 6).

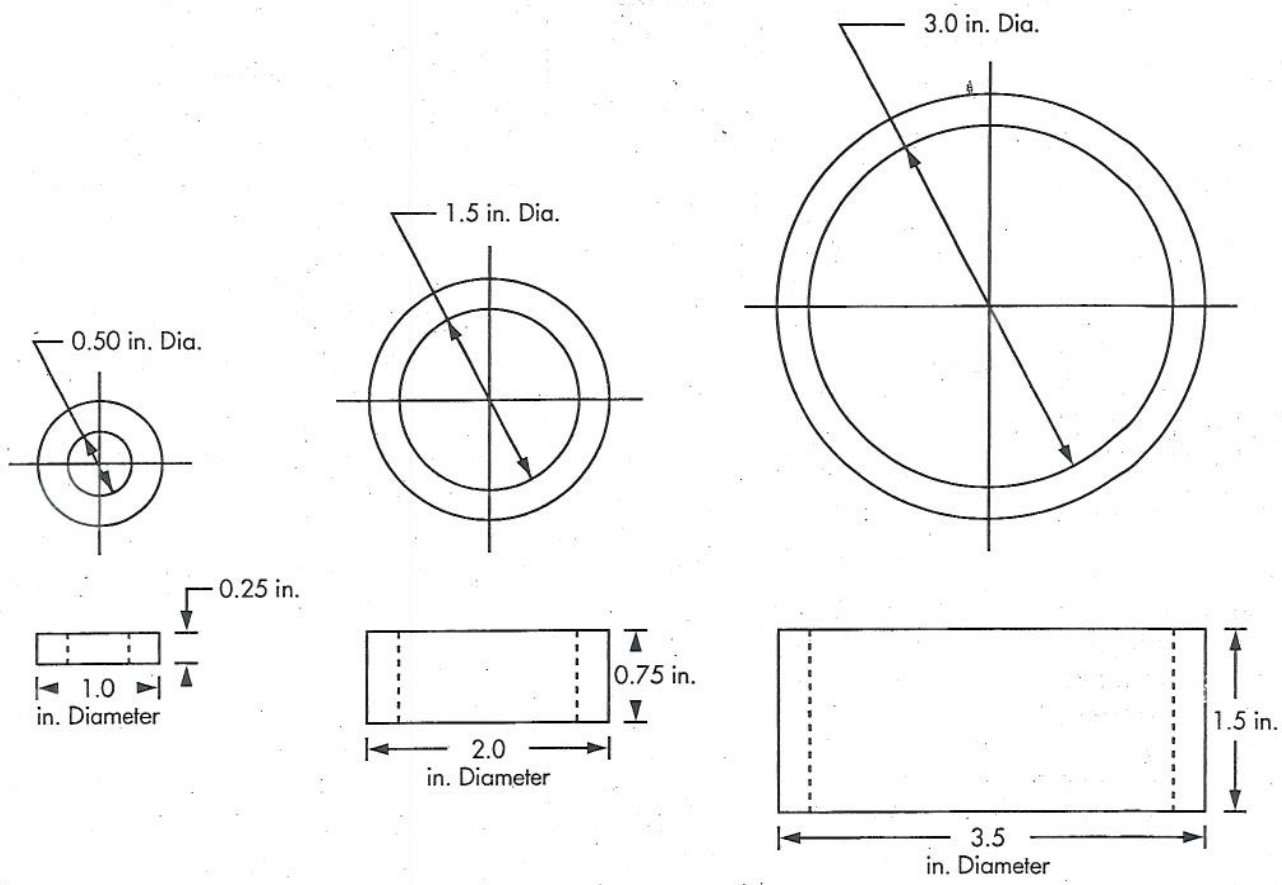

Figure 5. Protrusion Test Gauges

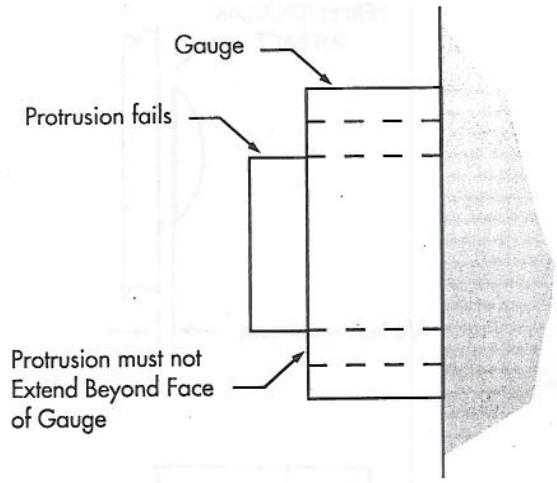

Figure 6. Protrusion Test

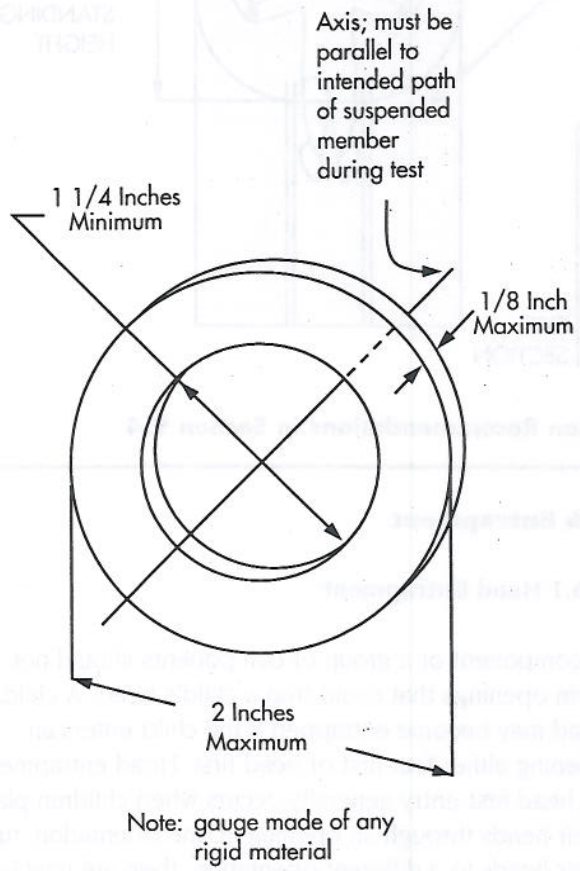

Figure 7. Protrusion Test Gauge for Suspended Swing Assemblies

9.3 Protrusions on Suspended Members of Swing Assemblies

Because protrusions on swings can be extremely hazardous, given the potential for impact incidents, a special test gauge (see Figure 7) and procedure are recommended. No bolts or components in the potential impact region on suspended members should protrude through the hole beyond the face of the specified gauge, when tested in accordance with the following method.

Conduct the test with the suspended member in its rest position. Place the gauge over any protrusion on the front or rear surface of the suspended member such that the axis of the hole in the gauge is parallel to both the intended path of the suspended member and a horizontal plane. Visually determine if the protrusion penetrates through the hole and beyond the face of the gauge.

9.4 Protrusions that Project Upwards and Protrusions on Slides

To minimize the likelihood of clothing entanglement, protrusions that fit within any one of the three gauges shown in Figure 5 and also have a major axis that projects upwards from a horizontal plane should not have projections perpendicular to the plane of the surrounding surface that are greater than 1/8 inch (see Figure 8). This recommendation also applies to protrusions on slides no matter what their orientation if the protrusions fall within the area depicted in Figure 9. NOTE: The underside of a slide chute is not subject to the protrusion recommendation in this section but is subject to the general recommendations for protrusions in Section 9.2. For a slide chute with a circular cross section, the portion of the underside not subject to the protrusion recommendation in this section is shown in Figure 19.

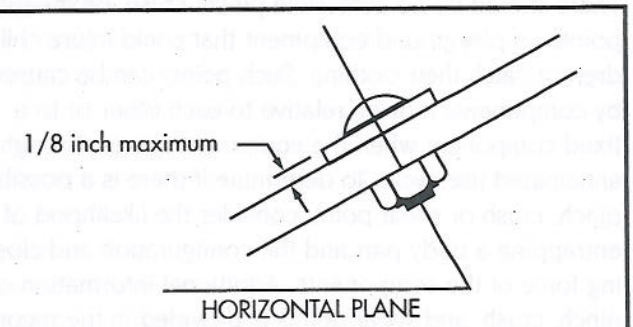

Figure 8. Upwards Facing Protrusion

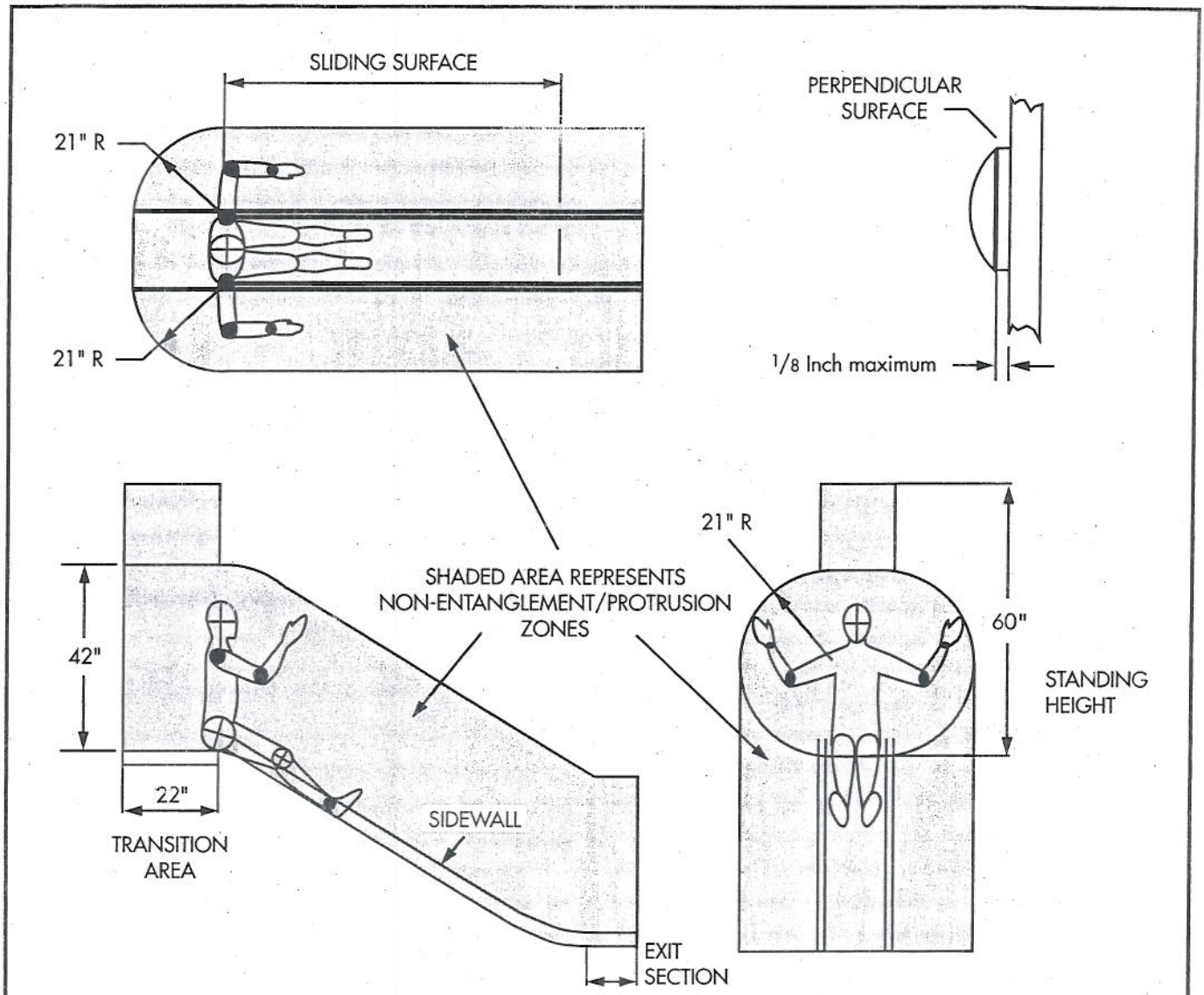

Figure 9. Area on Slides Subject to Protrusion Recommendations in Section 9.4

9.5 Pinch, Crush, and Shearing Points

There should be no accessible pinch, crush, or shearing points on playground equipment that could injure children or catch their clothing. Such points can be caused by components moving relative to each other or to a fixed component when the equipment moves through its anticipated use cycle. To determine if there is a possible pinch, crush or shear point, consider the likelihood of entrapping a body part and the configuration and closing force of the components. Additional information on pinch, crush, and shear points is provided in the recommendations addressing specific pieces of equipment in Section 9.

9.6 Entrapment

9.6.1 Head Entrapment

A component or a group of components should not form openings that could trap a child's head. A child's head may become entrapped if the child enters an opening either feet first or head first. Head entrapment by head-first entry generally occurs when children place their heads through an opening in one orientation, turn their heads to a different orientation, then are unable to withdraw from the opening. Head entrapment by feet-first entry involves children who generally sit or lie down and slide their feet into an opening that is large enough

to permit passage of their bodies but is not large enough to permit passage of their heads.

Generally, an opening presents an entrapment hazard if the distance between any interior opposing surfaces is greater than 3.5 inches and less than 9 inches. When one dimension of an opening is within this range, all dimensions of the opening should be considered together to evaluate the possibility of entrapment. This recommendation applies to all completely-bounded openings (see Figure B-1 in Appendix B) except where the ground serves as an opening's lower boundary. Further, it applies to all openings regardless of their height above the ground (see Figure B-1). Even openings that are low enough for children's feet to touch the ground can present a risk of strangulation for an entrapped child, because younger children may not have the necessary cognitive ability or motor skills to extricate their heads especially if scared or panicked.

To determine whether an opening is hazardous, use the recommended test fixtures, test methods and performance recommendations described in Appendix B. These recommendations apply to all playground equipment for both preschool-age and school-age children. Fixed equipment as well as moving equipment (in its stationary position) should be tested for entrapment hazards. There are two special cases for which separate procedures are given: completely bounded openings where depth of penetration is a critical issue (see Section B5), and openings formed by non-rigid climbing components (see Section B6).

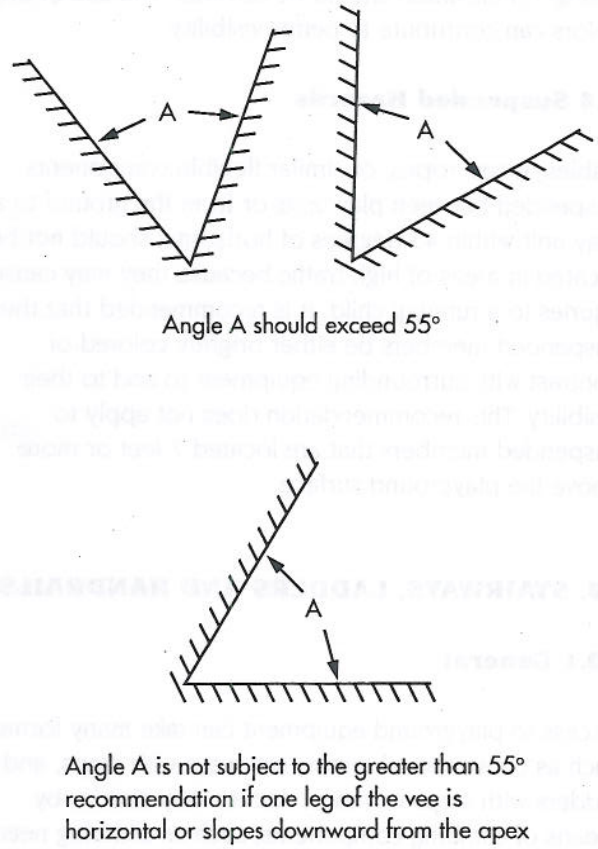

Figure 10. Recommendations for Angles

9.6.2 Angles

The angle of any vertex formed by adjacent components should be greater than 55 degrees, unless the lower leg is horizontal or projects downwards (see Figure 10). An exception to this recommendation can be made if a rigid shield is attached to the vertex between adjacent components and the shield is of sufficient size to prevent a 9 inch diameter circular template from simultaneously touching components on either side of the vertex (see Figure 11).

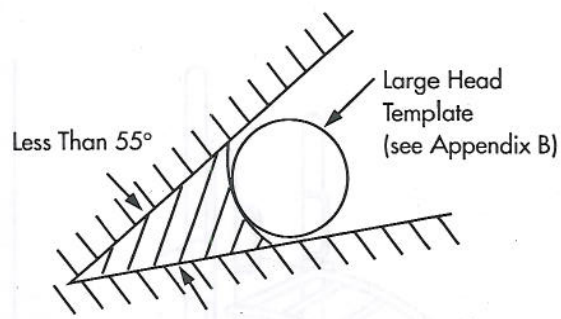

Figure 11. Shield for Angle Less than 55°

9.7 Tripping Hazards

All anchoring devices for playground equipment, such as concrete footings or horizontal bars at the bottom of flexible climbers, should be installed below ground level, beneath the base of the protective surfacing material, to eliminate the hazard of tripping. This will also prevent children who may fall from sustaining additional injuries due to exposed footings.

Low retaining walls are commonly used to help contain loose surfacing materials. In order to minimize trip hazards, retaining walls should be highly visible and any

change of elevation should be obvious. The use of bright colors can contribute to better visibility.

9.8 Suspended Hazards

Cables, wires, ropes, or similar flexible components suspended between play units or from the ground to a play unit within 45 degrees of horizontal should not be located in areas of high traffic because they may cause injuries to a running child. It is recommended that these suspended members be either brightly colored or contrast with surrounding equipment to add to their visibility. This recommendation does not apply to suspended members that are located 7 feet or more above the playground surface.

10. STAIRWAYS, LADDERS AND HANDRAILS

10.1 General

Access to playground equipment can take many forms, such as conventional ramps, stairways with steps, and ladders with steps or rungs. Access may also be by means of climbing components, such as climbing nets, arch climbers, and tire climbers (see Figure 12). Such climbing components are generally intended to be more challenging than stairways and stepladders, and so require better balance and coordination of the children. Rung ladders are generally considered to present a level of challenge intermediate between stairways or stepladders and climbing components.

Rung ladders and climbing components such as climbing nets, arch climbers, and tire climbers, should not be used as the sole means of access to equipment intended for preschool-age children.

Platforms over 6 feet in height (with the exception of free-standing slides) should provide an intermediate standing surface where a decision can be made to halt the ascent and to pursue an alternative means of descent.

10.2 Stairways and Ladders

Stairways, stepladders, and rung ladders are distinguished by the range of slopes permitted for each of these types of access. However, in all cases the steps or rungs should be evenly spaced, including the spacing between the top step or rung and the surface of the platform. Table 2 contains recommended dimensions for:

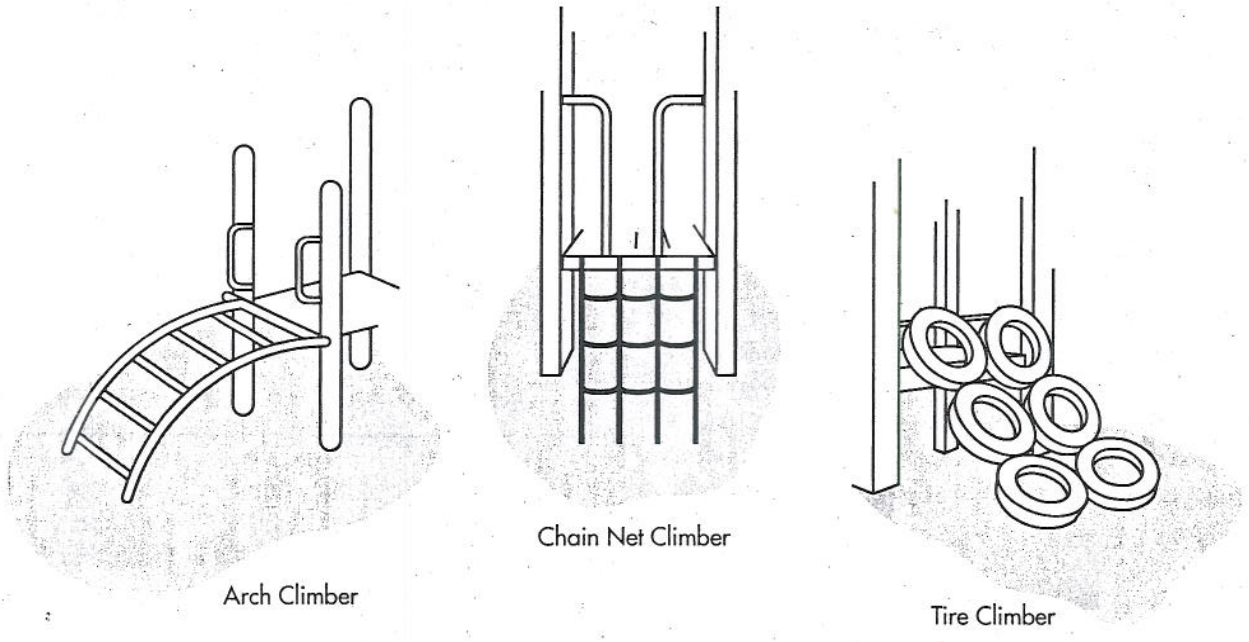

Figure 12. Examples of More Challenging Modes of Access

TABLE 2

Recommended Dimensions for Access Slope, Tread or Rung Width, Tread Depth, Rung Diameter, and Vertical Rise for Rung Ladders, Stepladders, Stairways, and Ramps.

Type of Access	Age of Intended User	
	2-5 Years	5-12 Years
Rung Ladders		
Slope	75°–90°	75°–90°
Rung Width	≥ 12"	≥ 16"
Vertical rise (tread to tread)	≤ 12"**	≤ 12"**
Rung Diameter	0.95"–1.55"	0.95"–1.55"
Stepladders		
Slope	50°–75°	50°–75°
Tread Width – Single File	12"–21"	≥ 16"
– Two-Abreast	*	≥ 36"
Tread Depth – Open Riser	≥ 7"	≥ 3"
– Closed Riser	≥ 7"	≥ 6"
Vertical Rise (tread to tread)	≤ 9"**	≤ 12"**
Stairways		
Slope	≤ 35°	≤ 35°
Tread Width – Single File	≥ 12"	≥ 16"
– Two-Abreast	≥ 30"	≥ 36"
Tread Depth – Open Riser	≥ 7"	≥ 8"
– Closed Riser	≥ 7"	≥ 8"
Vertical Rise (tread to tread)	≤ 9"**	≤ 12"**
Ramps (not intended for access by the disabled)* **		
Slope (vertical:horizontal)	≤ 1:8	≤ 1:8
Width – Single File	≥ 12"	≥ 16"
– Two-Abreast	≥ 30"	≥ 36"

* Not recommended for preschool-age children

** Entrapment provisions apply

*** For information on requirements for access to playground equipment by disabled children contact the U.S. Architectural and Transportation Barriers Compliance Board [**11**].

Note: ≥ means equal to or greater than and
≤ means equal to or less than

access slope, tread or rung width, tread depth, rung diameter, and vertical rise for rung ladders, stepladders, and stairways. Table 2 also contains slope and width recommendations for ramps. However, these recommendations are not intended to address ramps designed for access by wheelchairs.

Openings between steps or rungs and between the top step or rung and underside of a platform should prevent the possibility of entrapment. Risers on stairways and stepladders should be closed if the distance between opposing interior surfaces of consecutive steps is between 3.5 and 9 inches (see Section 9.6). Since the design of rung ladders does not permit risers to be closed, the space between rungs should not be between 3.5 and 9 inches.

When risers are closed, treads of stairways and ladders should prevent the accumulation of sand, water, or other materials on or between steps.

10.2.1 Rungs and Other Handgripping Components

Whereas the steps of stairways and stepladders are used only for foot support, the rungs of rung ladders are used for both foot support and for hand support by a climbing child since rung ladders generally do not have handrails.

Rungs are generally round in cross section and should have a diameter or maximum cross sectional dimension between 0.95 and 1.55 inches. Other components intended to be grasped by the hands such as the bars of climbers should also have a diameter or maximum cross sectional dimension between 0.95 and 1.55 inches.

To benefit the weakest child in each age group, a diameter of 1.25 inches is preferred. All rungs should be secured in a manner that prevents them from turning.

10.3 Handrails

Handrails on stairways and stepladders are intended to provide hand support and to steady the user. Continuous handrails extending over the full length of the access should be provided on both sides of all stairways and stepladders, regardless of the height of the access. Rung ladders do not require handrails since rungs or side supports provide hand support on these more steeply inclined accesses.

10.3.1 Handrail Height

Handrails should be available for use at the appropriate height, beginning with the first step. The vertical distance between the top front edge of a step (tread nosing) and

the top surface of the handrail above it should be as follows:

- Preschool-Age Children: between 22 and 26 inches.
- School-Age Children: between 22 and 38 inches.

10.3.2 Handrail Diameter

The diameter or maximum cross-sectional dimension of handrails should be between 0.95 and 1.55 inches. To benefit the weakest child in each age group, a diameter of 1.25 inches is preferred.

10.4 Transition from Access to Platform

On any transition from an access mode to a platform, handrails or handholds should be adequate to provide support until the child has fully achieved the desired posture on the platform. Any opening between a handrail and an adjacent vertical structure (e.g., vertical support post for a platform or vertical slat of a protective barrier) should not pose an entrapment hazard (see Section 9.6).

On accesses that do not have handrails, such as rung ladders, flexible climbers, arch climbers, and tire climbers, hand support should provide for the transition between the top of the access and the platform. Options include vertical handrails and loop handgrips extending over the top of the access.

11. PLATFORMS, GUARDRAILS AND PROTECTIVE BARRIERS

11.1 Design Considerations

Platforms should be within $\pm 2°$ of a horizontal plane and openings should be provided to allow for drainage.

11.2 Guardrails and Protective Barriers

Either guardrails or protective barriers may be used to prevent inadvertent or unintentional falls off elevated platforms. Protective barriers, however, to provide greater protection, should be designed to prevent intentional attempts by children seeking to defeat the barrier either by climbing over or through the barrier.

For example, guardrails may have a horizontal top rail with infill consisting of vertical bars having openings that are greater than 9 inches. Such openings would not present an entrapment hazard but would not prevent a child from climbing through the openings. A protective barrier should prevent passage of a child during deliberate attempts to defeat the barrier. Any openings between uprights or between the platform surface and lower edge of a protective barrier should prevent passage of the small torso template (see Figure B-3 in Appendix B).

11.3 Minimum Elevation Requiring Guardrails and Protective Barriers

Guardrails or protective barriers should be provided on platforms, walkways, landings, and transitional surfaces in accordance with the following minimum elevation recommendations.

Preschool-Age Children: Since younger children have poorer coordination and balance and are more vulnerable to injury than school-age children, guardrails or protective barriers are warranted at lower elevations. An elevated surface that is more than 20 inches above the protective surfacing should have a guardrail or protective barrier to prevent falls. Guardrails are acceptable for platforms over 20 inches but not over 30 inches high, but a full protective barrier may be preferable for this age group since it affords a greater degree of protection from falls. Protective barriers should always be used for platforms that are over 30 inches above the protective surfacing.

School-Age Children: An elevated surface that is more than 30 inches above the protective surfacing should have a guardrail or protective barrier to prevent falls. For platforms over 30 inches but not over 48 inches high, guardrails are acceptable, although a full protective barrier always provides greater protection. Platforms that are over 48 inches above the protective surfacing should always have a protective barrier.

An elevated surface is exempt from these recommendations if a guardrail or protective barrier would interfere with the intended use of the equipment; this includes most climbing equipment, and platforms that are layered so that the fall height does not exceed 20 inches on equipment intended for preschool-age children or 30 inches on equipment intended for school-age children.

11.4 Minimum Height of Guardrails

The minimum height should prevent the largest child from inadvertently falling over the guardrail. In addition, the guardrail should extend low enough to prevent the smallest child from inadvertently stepping under it (see Figure 13).

Preschool-Age Children: the top surface of guardrails should be at least 29 inches high and the lower edge should be no more than 23 inches above the platform.

School-Age Children: the top surface of guardrails should be at least 38 inches high and the lower edge should be no more than 28 inches above the platform.

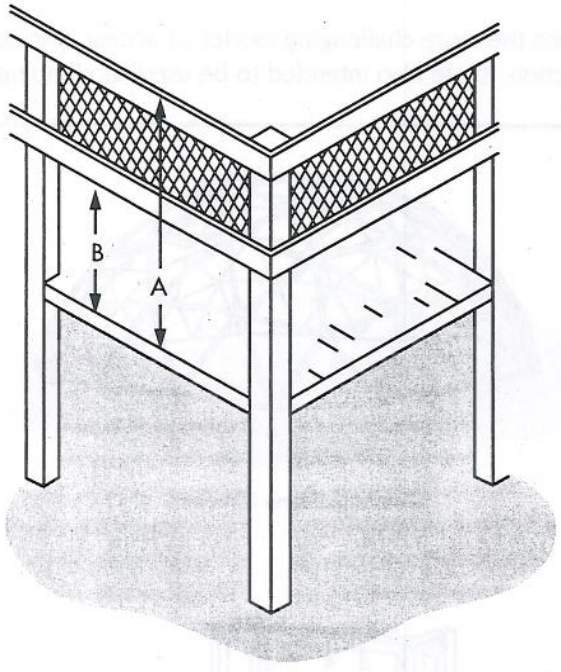

A = 38" minimum for school-age children
29" minimum for preschool-age children

B = 28" maximum for school-age children
23" maximum for preschool-age children

Note: Guardrails should be designed to prevent inadvertent or unintentional falls off the platform, to discourage climbing on the barrier, to prevent the possibility of entrapment, and to aid supervision. Refer to text for detailed recommendations regarding infill.

Figure 13. Guardrails on Elevated Platforms

11.5 Minimum Height of Protective Barriers

The minimum height should prevent the largest child from inadvertently falling over the protective barrier. In addition, because the protective barrier should not permit children to climb through or under it, openings in the barrier should preclude passage of the small torso template (see Section 9.6).

Preschool-Age Children: the top surface of protective barriers should be at least 29 inches high. Vertical infill for protective barriers may be preferable for younger children because the vertical components can be grasped at whatever height a child chooses as a handhold.

School-Age Children: the top surface of protective barriers should be at least 38 inches high.

11.6 Other Design Considerations for Guardrails and Protective Barriers

Guardrails or protective barriers should completely surround an elevated platform except for entrance and exit openings necessary to access a play event.

Both guardrails and protective barriers should be designed to prevent inadvertent or unintentional falls off the platform, preclude the possibility of entrapment, and facilitate supervision. Horizontal cross-pieces should not be used as infill for the space below the top rail because they provide footholds for climbing. When solid panels are used as infill, it is recommended that there be some transparent areas to facilitate supervision and to permit viewing from the platform. To prevent head entrapment, guardrails should conform to the entrapment recommendations in Section 9.6.

11.7 Stepped Platforms

On some composite structures, platforms are layered or tiered, so that a child may fall onto a lower platform rather than the ground surface.

Unless there is an alternate means of access/egress, the maximum difference in height between stepped platforms should be:

- Preschool-Age Children: 12 inches.
- School-Age Children: 18 inches.

The space between the stepped platforms should follow the recommendations for entrapment in enclosed openings in Section 9.6. If the space exceeds 9 inches and the height of the lower platform above the protective surfacing exceeds 30 inches for preschool equipment or 48 inches for school-age equipment, infill should be used to reduce the space to less than 3.5 inches.

12. MAJOR TYPES OF PLAYGROUND EQUIPMENT

12.1 Climbing Equipment

12.1.1 General

The term climbers refers to a wide variety of equipment, including arch climbers, sliding poles, chain or net climbers, upper body equipment (overhead horizontal ladders, overhead rings), dome climbers, parallel bars, balance beams, cable walks, suspension bridges, and spiral climbers, as well as composite structures with linked platforms (see Figure 14 for examples). Climbing equipment is generally designed to present a greater degree of physical challenge than other equipment on public playgrounds.

Older children tend to use climbing equipment more frequently and proficiently than younger ones. Because very young children have not yet developed some of the physical skills necessary for certain climbing activities (including balance, coordination, and upper body strength), they may have difficulty using more challenging climbing components such as rung ladders, non-rigid climbers, arch climbers, and upper body devices.

12.1.2 Design Considerations

Since the more challenging modes of access discussed in Section 10 are also intended to be used as climbing

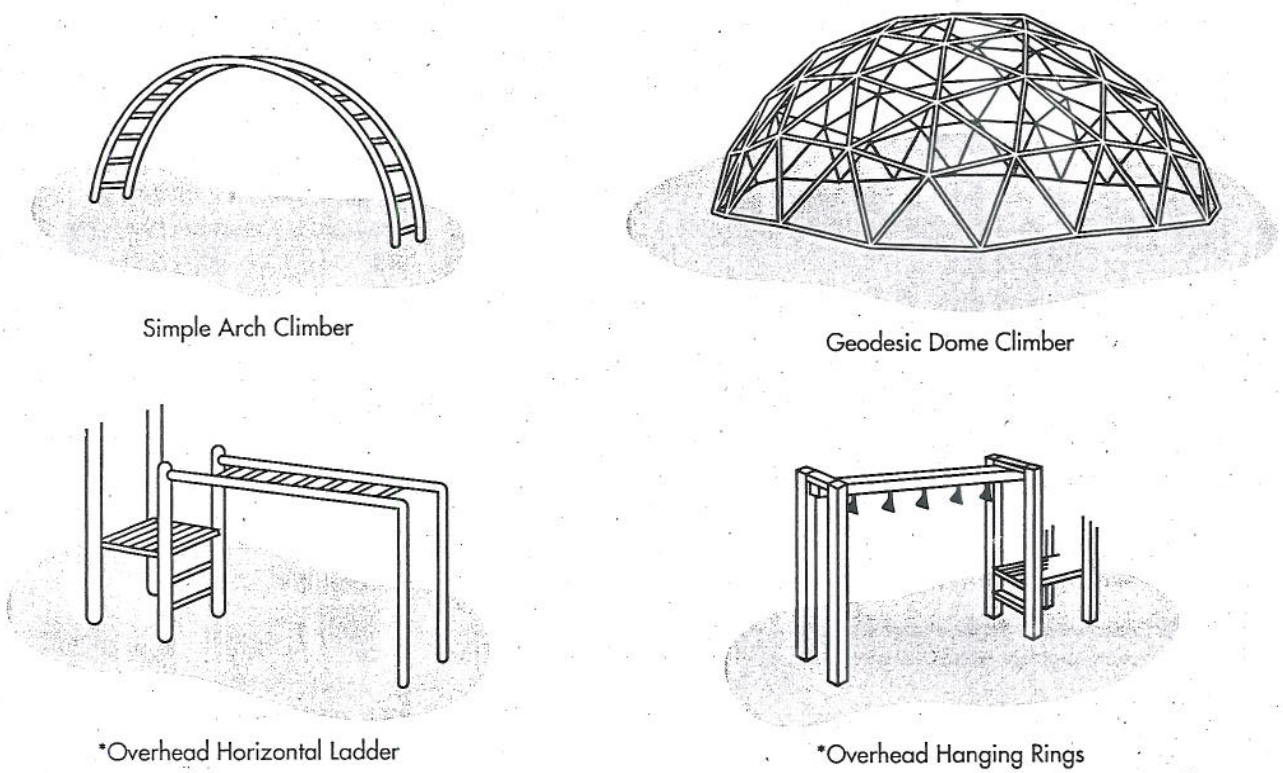

*Note: This design shows how upper body equipment is typically integrated with multi-use equipment

Figure 14. Typical Climbing Equipment

devices, the recommendations for the size of hand-gripping components and stepped platforms covered in that section are applicable to climbing equipment.

Climbers should not have climbing bars or other structural components in the interior of the structure onto which a child may fall from a height of greater than 18 inches.

Climbing equipment should allow children to descend as easily as they ascend. One way of implementing this recommendation is to provide an easier, alternate means of descent, such as another mode of egress, platform, or piece of equipment. For example, a stairway can be added to provide a less challenging mode of descent than a vertical rung ladder or flexible climbing device. The levels of challenge that characterize different types of access are discussed in Section 10.

Preschool-Age Children: Offering an easy way out is particularly important on climbing devices intended for preschoolers, since their ability to descend climbing components emerges later than their ability to climb up the same components.

12.1.3 Climbers With Non-Rigid Components

Net and chain climbers use a flexible grid of ropes or chains for climbing. Tire climbers are also described as flexible climbers. These may have the tires secured tread-to-tread in the form of a sloping grid or the tires may be suspended individually by chains or other means to provide access to an elevated platform. Since net, chain, and tire climbers have flexible components that do not provide a steady means of support, they require more advanced balance abilities than conventional ladders.

Flexible grid climbing devices which provide access to platforms should be securely anchored at both ends. When one end is connected to the ground, the anchoring devices should be installed below ground level, beneath the base of the protective surfacing material.

Connections between ropes, cables, or chains within the climbing grid or between tires should be securely fixed. Spacing between the horizontal and vertical components of a climbing grid should satisfy all entrapment criteria (see Section 9.6).

Flexible grid climbing devices are not recommended as the sole means of access to equipment intended for preschool-age children.

12.1.4 Arch Climbers

Arch climbers consist of metal or wood rungs attached to convex side supports. They may be free standing (see Figure 14) or be provided as a more challenging means of access to other equipment (see Figure 12). Because of this extra challenge, they should not be used as the sole means of access to other equipment. A less challenging option will ensure that children use the arch climber because they are willing to assume the challenge and not because they are forced to use it. Free standing arch climbers are not recommended for preschool-age children.

The rung diameter and spacing of rungs on arch climbers should follow the recommendations for rung ladders in Table 2.

12.1.5 Horizontal Ladders and Overhead Rings

Four-year-olds are generally the youngest children capable of using upper body devices such as these. The recommendations below are designed to accommodate children 4 through 12 years of age.

The space between adjacent rungs of overhead ladders should be greater than 9 inches to satisfy the entrapment recommendations (see Section 9.6). The center-to-center spacing of horizontal ladder rungs should be as follows:

- **Preschool-Age Children:** no more than 12 inches.
- **School-Age Children:** no more than 15 inches.

This recommendation does not apply to the spacing of overhead rings because, during use, the gripped ring swings through an arc and reduces the distance to the gripping surface of the next ring.

Horizontal ladders intended for preschool-age children should have rungs that are parallel to one another and evenly spaced.

The first handhold on either end of upper body equipment should not be placed directly above the platform or climbing rung used for mount or dismount. This

minimizes the risk of children impacting rigid access structures if they fall from the first handhold during mount or dismount.

The maximum height of upper body equipment measured from the center of the grasping device to the protective surfacing should be:

- Preschool-Age Children: 60 inches.
- School-Age Children: 84 inches.

If overhead swinging rings are suspended by chains, the maximum length of the chains should be 12 inches.

12.1.6 Sliding Poles

Vertical sliding poles are designed to be more challenging than some other types of climbing equipment. They are not recommended for preschool-age children who may lack the upper body strength and coordination to successfully slide down the pole. Furthermore, once younger children have grasped the pole, they would be forced to slide down it since there is no alternative option.

Sliding poles should be continuous with no protruding welds or seams along the sliding surface and the pole should not change direction along the sliding portion.

The horizontal distance between a sliding pole and the edge of the platform or other structure used for access to the sliding pole should be at least 18 inches. This minimum distance applies to all points down the sliding pole.

No point on the sliding pole at or above the level of the access structure, where a child is likely to reach for the pole, should be more than 20 inches away from the edge of the access structure.

The pole should extend at least 60 inches above the level of the platform or other structure used for access to the sliding pole.

The diameter of sliding poles should be no greater than 1.9 inches.

Sliding poles and their access structures should be located so that traffic from other events will not interfere with the users during descent.

12.1.7 Climbing Ropes

A climbing rope should be secured at both ends and not be capable of being looped back on itself creating a loop with an inside perimeter greater than 5 inches.

12.1.8 Balance Beams

To avoid injuries during falls, balance beams should be no higher than:

- Preschool-Age Children: 12 inches.
- School-Age Children: 16 inches.

12.1.9 Layout of Climbing Components

When climbing components are part of a composite structure, their level of challenge and mode of use should be compatible with the traffic flow from adjacent components.

Upper body devices should be placed so that the swinging movement generated by children on this equipment cannot interfere with the movement of children on adjacent structures, particularly other children descending on slides.

The design of adjacent play structures should not facilitate climbing to the top support bars of upper body equipment.

12.2 Merry-Go-Rounds

Merry-go-rounds are the most common type of rotating equipment found on public playgrounds. Children usually sit or stand on the platform while other children or adults push the merry-go-round to make it rotate. In addition, children often get on and off the merry-go-round while it is in motion.

Merry-go-rounds may present a physical hazard to preschool-age children who have little or no control over such products once they are in motion. Therefore, children in this age group should always be supervised when using merry-go-rounds. Following are recommendations for merry-go-rounds:

The rotating platform should be continuous and approximately circular. The difference between the minimum and maximum radii of a non-circular platform should not

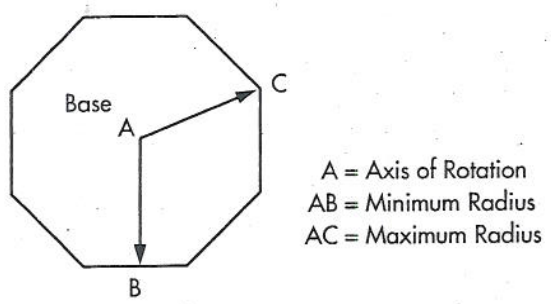

The difference between dimensions AC and AB should not exceed 2.0 inches.

Figure 15. Minimum and Maximum Radii of Non-Circular Merry-Go-Round Platform

exceed 2.0 inches (see Figure 15). No components of the apparatus, including handgrips, should extend beyond the perimeter of the platform. The underside of the perimeter of the platform should be no less than 9 inches above the level of the protective surfacing.

Children should be provided with a secure means of holding on. Where handgrips are provided, they should conform to the general recommendations for hand-gripping components in Section 10.2.1.

There should not be any accessible shearing or crushing mechanisms in the undercarriage of the equipment. The rotating platform of a merry-go-round should not have any sharp edges. The surface of the platform should be continuous with no openings between the axis and the periphery that permit a rod having a diameter of 5/16 inch to penetrate completely through the surface.

A means should be provided to limit the peripheral speed of rotation to a maximum of 13 ft/sec.

Merry-go-round platforms should not be provided with an oscillatory (up and down) motion.

12.3 Seesaws

The typical seesaw (also known as a "teeter totter") consists of a board or pole supported at the center by a fulcrum and having a seat at each end (see Figure 16). Seesaw use is quite complex because it requires two children to cooperate and combine their actions.

Younger children do not generally have the skills required to effectively use fulcrum seesaws. Therefore, seesaws are not recommended for preschool-age children unless they are equipped with a spring centering device to prevent abrupt contact with the ground should one child elect to dismount.

There is a trend to replace fulcrum seesaws on public playgrounds with spring-centered seesaws which have the advantage of not requiring two children to coordinate their actions in order to play safely (see discussion of Spring Rocking Equipment in Section 12.5).

The fulcrum of fulcrum seesaws should not present a pinch or crush hazard.

Partial car tires, or some other shock-absorbing material, should be embedded in the ground underneath the seats of fulcrum seesaws, or secured on the underside of the seats. This will help prevent limbs from being crushed between the seat and the ground, as well as cushion the impact. Fulcrum see-saws may also be equipped with a spring centering mechanism to minimize the risk of injury due to impact with the ground.

Handholds should be provided at each seating position for gripping with both hands and should not turn when grasped. Handholds should not protrude beyond the sides of the seat. Footrests should not be provided on fulcrum see-saws unless they are equipped with a spring centering mechanism to minimize the likelihood of impact with the ground.

Fulcrum seesaws should be constructed so that the maximum attainable angle between a line connecting the seats and the horizontal is 25°.

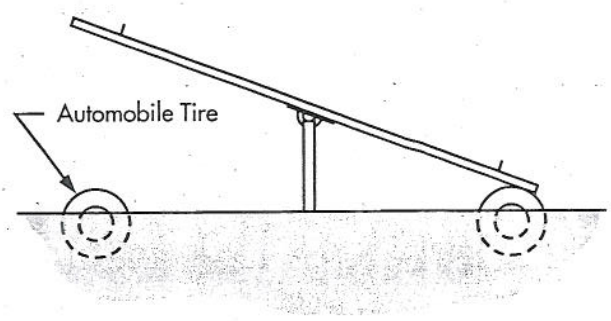

Figure 16. Typical Fulcrum Seesaw

12.4 Slides

12.4.1 General

Although children under 6 years of age may be more likely to play on slides, older children will still use slides depending on their availability relative to other types of equipment. Children can be expected to descend slide chutes in many different positions, rather than always sitting and facing forward as they slide. They will slide down facing backward, on their knees, lying on their backs, head first, and will walk both up and down the chute. Younger children in particular often slide down on their stomachs, either head or feet first.

Slides may provide a straight, wavy, or spiral descent either by means of a tube or an open slide chute. They may be either free-standing (see Figure 17), part of a composite structure, or built on the grade of a natural or man-made slope (embankment slide). The recommendations in this section do not apply to water slides or swimming pool slides.

12.4.2 Slide Access

With the exception of embankment slides, access to a slide may be by means of a ladder with rungs or steps, a stairway with steps, or the slide may be a component of a composite play structure to which access is provided by other means. Whatever means of access is provided to a slide, it should conform to the guidelines specified in the general discussion of access to all playground equipment (see Section 10).

12.4.3 Slide Platform

All slides should be provided with a platform with sufficient length to facilitate the transition from standing to sitting at the top of the inclined sliding surface. The length of the platform will usually not be an issue when the slide is attached to the deck of a composite structure, because decks are generally at least 3 feet square. However, in the case of a free-standing slide, it is recommended that the platform have a minimum length of at least 22 inches.

The platform should be horizontal and have a width at least equal to the width of the slide.

Guardrails or protective barriers should surround a slide platform and should conform to the guidelines specified in the general discussion of platforms (see Section 11).

Slides should not have any spaces or gaps between the platform and the start of the slide chute.

With the exception of tube slides, handholds should be provided at the entrance to all slides to facilitate the

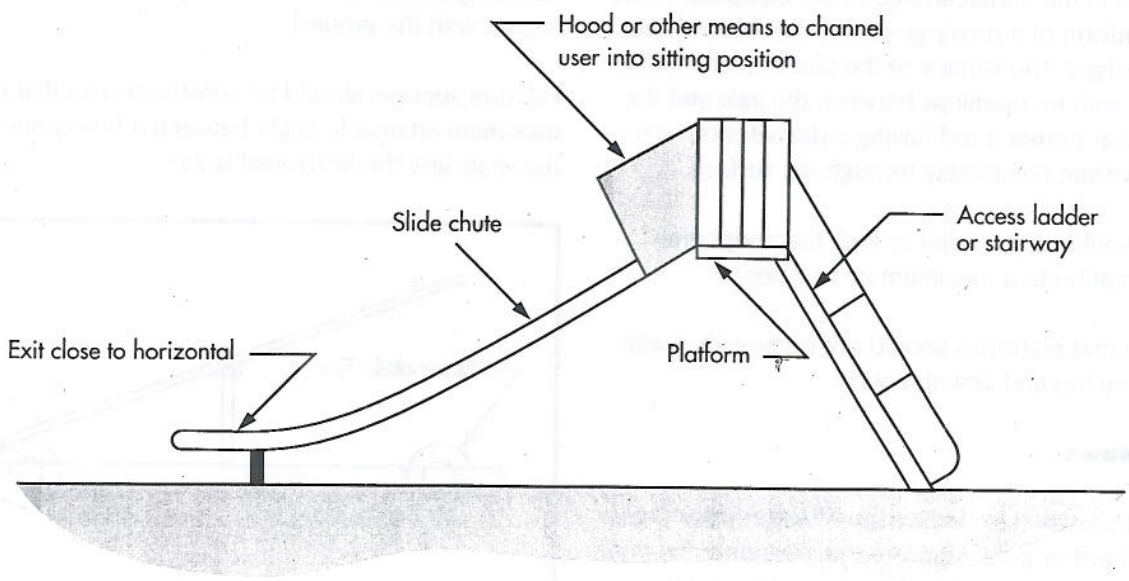

Figure 17. Typical Free-Standing Straight Slide

transition from standing to sitting and decrease the risk of falls. These should extend high enough to provide hand support for the largest child in a standing position, and low enough to provide hand support for the smallest child in a sitting position.

At the entrance to the chute there should be a means to channel a user into a sitting position. This may be a guardrail, a hood, or other device. Whatever means is provided, it should be of a design that does not encourage climbing.

12.4.4 Sliding Section of Straight Slides

It is recommended that the average incline of a slide chute be no more than 30 degrees. This can be measured by determining that the height to length ratio (as shown in Figure 18) does not exceed 0.577. No span on the slide chute should have a slope greater than 50 degrees.

Straight slides with flat open chutes should have sides with a 4 inch minimum height extending along both sides of the chute for the entire length of the inclined sliding surface.

The sides should be an integral part of the chute, without any gaps between the sides and the sliding surface. [Note: Roller slides are excluded from this recommendation.]

Slides may have an open chute with a circular, semicircular or curved cross section provided that:

a. the vertical height of the sides is no less than 4 inches when measured at right angles to a horizontal line that is 12 inches long when the slide is intended for preschool-age children and 16 inches long when the slide is intended for school-age children (see Figure 19);

or

b. the vertical height of the sides is no less than 4 inches minus two times the width of the slide chute divided by the radius of the slide chute curvature (see Figure 20).

Metal slides should be placed in shaded areas to prevent burns caused by direct sun on the slide chute.

12.4.5 Exit region

All slides should have an exit region to help children maintain their balance and facilitate a smooth transition from sitting to standing when exiting.

The exit region should be essentially horizontal and parallel to the ground and have a minimum length of 11 inches.

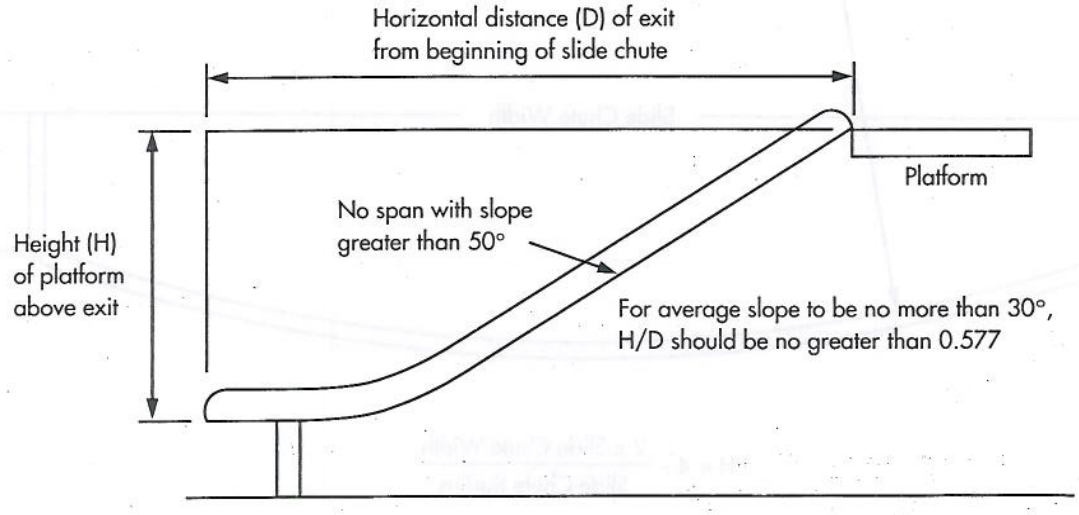

Figure 18. Slide Slope

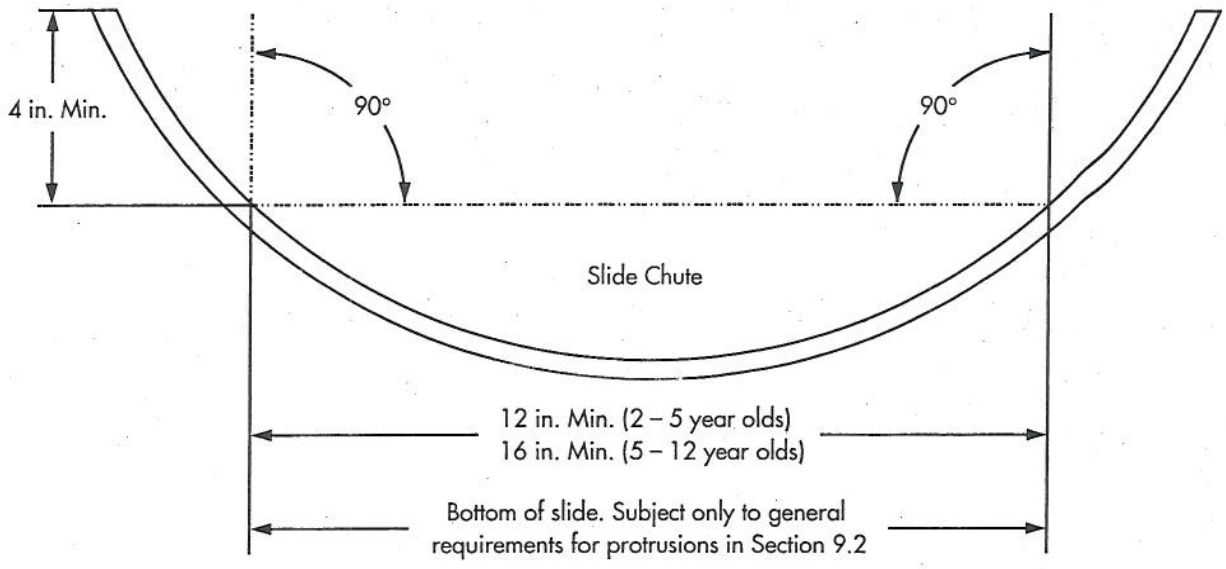

Figure 19. Minimum Side Height for Slide with Circular Cross Section

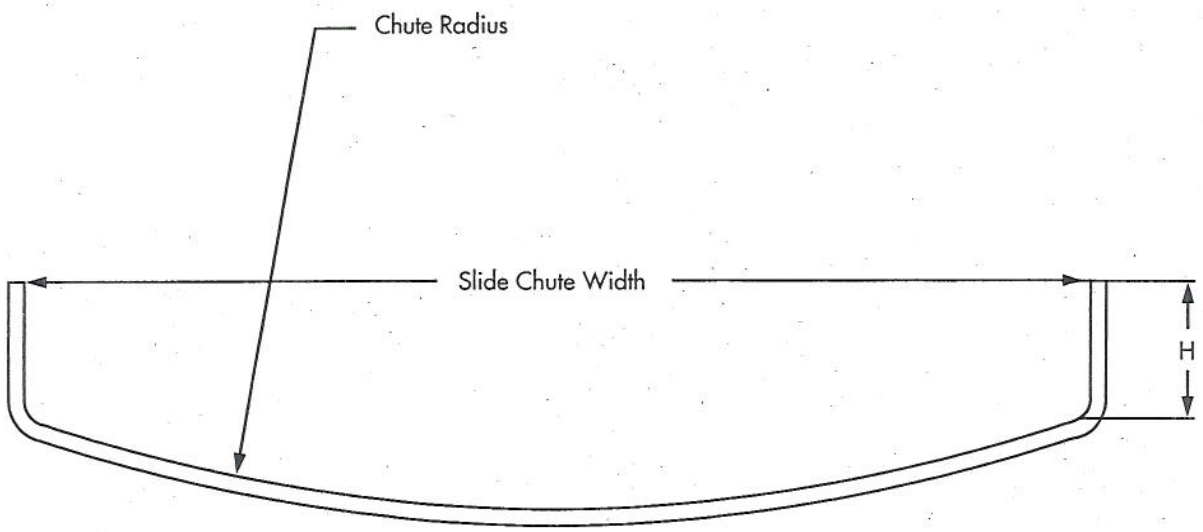

$$H = 4 - \frac{2 \times \text{Slide Chute Width}}{\text{Slide Chute Radius}}$$

Figure 20. Formula for Minimum Vertical Side Height for Slide with Curved Chute

The minimum internal diameter of the tube should be no less than 23 inches.

It should be noted that children using tube slides may not be visible to a supervisor. Consideration should be given to extra supervision on playgrounds having tube slides or to having transparent tube sections for observation and supervision.

12.4.9 Roller Slides

Roller slides should meet applicable recommendations for slides in Section 12.4.

The space between adjacent rollers and between the ends of the rollers and the stationary structure should be less than 3/16 inch.

Frequent inspections are recommended to insure that there are no missing rollers or broken bearings.

12.5 Spring Rockers

Preschool-age children enjoy the bouncing and rocking activities presented by this equipment, but older children may not find it challenging enough.

Examples of spring rockers are shown in Figure 21. Preschoolers are the primary users of such rocking equipment. Therefore, the recommendations in this section address only preschool-age children.

Seat design should not allow the rocker to be used by more than the intended number of users.

Each seating position should be equipped with handgrips and footrests. The diameter of handgrips should follow the recommendations for handgripping components in Section 10.

The springs of rocking equipment should minimize the possibility of children pinching their hands or their feet between coils or between the spring and a part of the rocker.

12.6 Swings

12.6.1 General

Children of all ages generally enjoy the sensations created while swinging. Most often, they sit on the swings, and it is common to see children jumping off swings. Younger children tend to also swing on their stomachs, and older children may stand on the seats.

Swings may be divided into two distinct types: single-axis of motion and multiple-axes of motion. A single-axis swing is intended to swing back-and-forth in a single

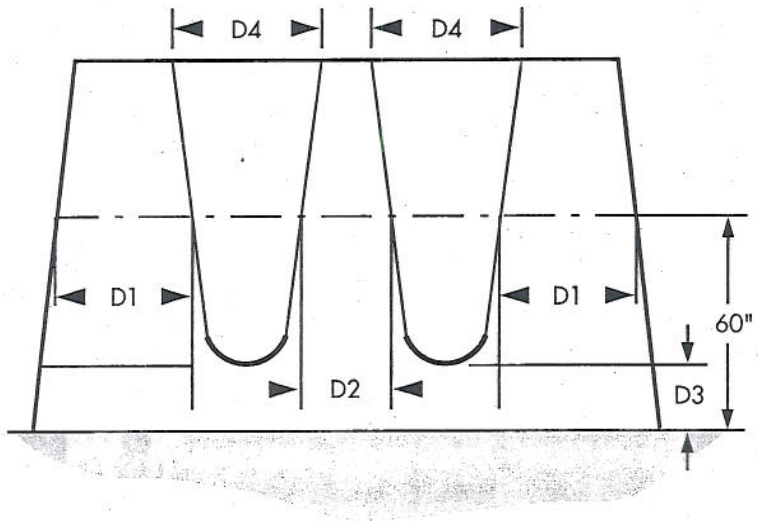

D1 = 30" Min.

D2 = 24" Min.

D3 = 12" Min. for Preschool-Age Children
16" Min. for School-Age Children
24" Min. for Tot Swings

D4 = 20" Min.

Figure 22. Minimum Clearances for Single-Axis Swings

plane and generally consists of a seat supported by at least two suspending members each of which is connected to a separate pivot on an overhead structure. A multiple-axis swing consists of a seat (generally a tire) suspended from a single pivot that permits it to swing in any direction. Hardware used to secure the suspending elements to the swing seat and to the supporting structure should not be removable without the use of tools. S-hooks are often part of a swing's suspension system, either attaching the suspending elements to the overhead support bar or to the swing seat. Open S-hooks can catch a child's clothing and present a strangulation hazard. S-hooks should be pinched closed. An S-hook is considered closed if there is no gap or space greater than 0.04 inches. It is appropriate to measure this gap with a feeler gauge but, in the absence of such a gauge, the gap should not admit a dime.

Swings should be suspended from support structures that discourage climbing. A-frame support structures should not have horizontal cross-bars.

Fiber ropes are not recommended as a means to suspend swings.

12.6.2 Single-Axis (To-Fro) Swings

To help prevent young children from inadvertently running into the path of moving swings, swing structures should be located away from other equipment or activities. Additional protection can be provided by means of a low barrier, such as a fence or hedge. Such barriers should not be an obstacle within the use zone of a swing structure or hamper supervision by blocking visibility.

The use zone to the front and rear of single-axis swings should never overlap the use zone of another piece of equipment.

To minimize the likelihood of children being struck by a moving swing, it is recommended that no more than two single-axis swings be hung in each bay of the supporting structure.

Attaching single-axis swings to composite structures is not recommended.

Swing seats should be designed to accommodate no more than one user at any time. To help reduce the severity of impact injuries, wood or metal swing seats are not recommended. Lightweight rubber or plastic swing seats are preferred. Edges of seats should have smoothly finished or rounded edges and should conform to the protrusion recommendations in Section 9.3.

The vertical distance from the underside of an occupied swing seat to the protective surfacing should be no less than 12 inches for swings intended for preschool-age children and no less than 16 inches for swings intended for school-age children. NOTE: If loose-fill material is used as a protective surfacing, the seat height recommendations should be determined after the material has been leveled.

To minimize collisions between swings or between a swing and the supporting structure, the clearances shown in Figure 22 are recommended. In addition, to reduce side-to-side motion, swing hangers should be spaced no less than 20 inches apart.

It is recommended that single-axis swings intended for preschool-age children have the pivot points no greater than 8 feet above the protective surfacing.

12.6.3 Tot Swings

These are single-axis swings intended for children under 4 years of age to use with adult assistance. The seats and suspension systems of these swings, including the related hardware, should follow all of the other criteria for conventional single axis swings.

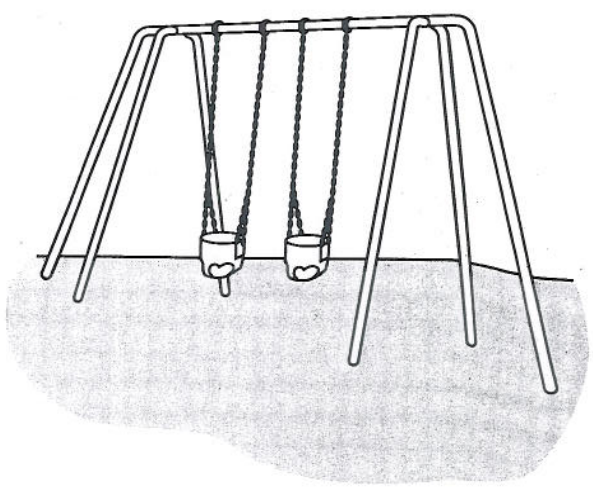

Figure 23. Example of Tot Swings

For slides that are no more than 4 feet in height, the height of the exit region should be no more than 11 inches from the protective surfacing.

For slides that are over 4 feet in height, the exit region should be at least 7 inches but not more than 15 inches above the protective surfacing.

Slide exit edges should be rounded or curved, to prevent lacerations or other injuries which could result from impact with a sharp or straight edge.

All slide exits should be located in uncongested areas of the playground.

12.4.6 Embankment Slides

The slide chute of an embankment slide should have a maximum height of 12 inches above the underlying ground surface. Such a design basically eliminates the hazard of falls from height. Embankment slides should follow all of the recommendations given for straight slides, where applicable, e.g., side height, slope, use zone at exit, etc. It is important that some means be provided at the slide chute entrance to minimize the use of these slides by children on skates, skateboards or bicycles.

12.4.7 Spiral Slides

It is recommended that spiral slides follow the recommendations for straight slides (where applicable), with special attention given to design features which may present problems unique to spiral slides, such as lateral discharge of the user.

Preschool-Age Children: Because these children have less ability to maintain balance and postural control, only short spiral slides, one turn (360°) or less, are recommended for this age group.

12.4.8 Tube Slides

Tube slides should meet all the applicable recommendations for other slides.

Barriers should be provided or surfaces textured to prevent sliding on the top (outside) of the tube.

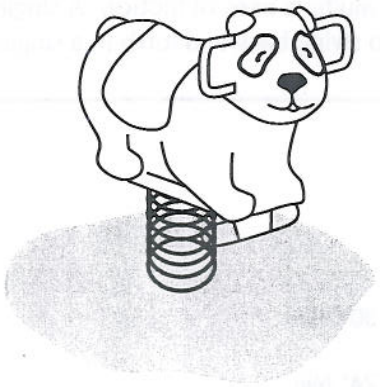

Animal Spring Rocker

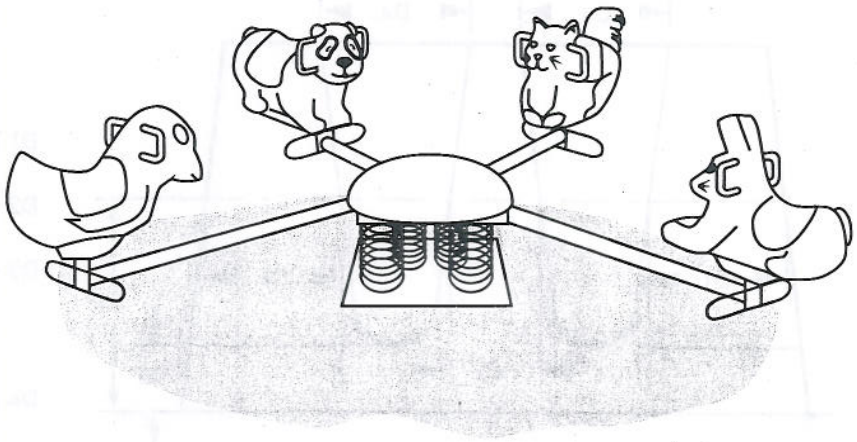

4-Way Spring-Centered Seesaw

Figure 21. Examples of Spring Rockers

APPENDIX A
Suggested General Maintenance Checklist

The following checklist may be used to determine the condition of a playground. Numbers in parenthesis refer to sections in the handbook that discuss these issues. Place a check mark next to each of the following items that apply.

Surfacing (4)

___ The equipment has adequate protective surfacing under and around it and the surfacing materials have not deteriorated.

___ Loose-fill surfacing materials have no foreign objects or debris.

___ Loose-fill surfacing materials are not compacted and do not have reduced depth in heavy use areas such as under swings or at slide exits.

General Hazards

___ There are no sharp points, corners or edges on the equipment (9.1).

___ There are no missing or damaged protective caps or plugs (9.1).

___ There are no hazardous protrusions and projections (9.2).

___ There are no potential clothing entanglement hazards, such as open S-hooks or protruding bolts (8.2, and 9.4).

___ There are no pinch, crush, and shearing points or exposed moving parts (9.5).

___ There are no trip hazards, such as exposed footings on anchoring devices and rocks, roots, or any other environmental obstacles in the play area (9.7).

Deterioration of the Equipment (7.2)

___ The equipment has no rust, rot, cracks or splinters, especially where it comes in contact with the ground.

___ There are no broken or missing components on the equipment (e.g., handrails, guardrails, protective barriers, steps or rungs on ladders) and there are no damaged fences, benches, or signs on the playground.

___ All equipment is securely anchored.

Security of Hardware (7.2)

___ There are no loose fastening devices or worn connections, such as S-hooks.

___ Moving components, such as swing hangers or merry-go-round bearings, are not worn.

Drainage (6.1)

___ The entire play area has satisfactory drainage, especially in heavy use areas such as under swings and at slide exits.

Leaded Paint (8.1)

___ The leaded paint used on the playground equipment has not deteriorated as noted by peeling, cracking, chipping or chalking.

___ There are no ares of visible leaded paint chips or accumulation of lead dust.

General Upkeep of Playgrounds (7.2)

___ The entire playground is free from miscellaneous debris or litter such as tree branches, soda cans, bottles, glass, etc.

___ There are no missing trash receptacles.

___ Trash receptacles are not full.

NOTES:

APPENDIX B
Entrapment Recommendations and Test Methods

B1. GENERAL — Any completely-bounded opening (see Figure B-1) may be a potential head entrapment hazard and should conform to the recommendations in this appendix. One exception to these recommendations is an opening where the ground serves as the lower boundary. Openings in both horizontal and vertical planes present a risk of entrapment. Even those openings which are low enough to permit a child's feet to touch the ground present a risk of strangulation to an entrapped child, because younger children may not have the necessary cognitive ability and motor skills to withdraw their heads, especially if scared or panicked.

An opening may present an entrapment hazard if the distance between any interior opposing surfaces is greater than 3.5 inches or less than 9 inches; when one dimension of an opening is within this potentially hazardous range, all dimensions of the opening should be considered together to fully evaluate the possibility of entrapment. The most appropriate method to determine whether an opening is hazardous is to test it using the following fixtures, methods, and performance criteria.

These recommendations apply to all playground equipment, both for preschool-age and school-age children; fixed equipment as well as moving equipment (in its stationary position) should be tested for entrapment hazards. There are two special cases for which separate procedures are given: completely-bounded openings where depth of penetration is a critical issue (see Figure B-2); and openings formed by non-rigid climbing components.

B2. TEST FIXTURES — Two templates are required to determine if completely bounded openings in rigid structures present an entrapment hazard.

B2.1 Small Torso Template — The dimensions (see Figure B-3) of this template are based on the size of the torso of the smallest user at risk, (5th percentile 2-year-old child). If an opening is too small to admit the template, it is also too small to permit feet first entry by a child. Because children's heads are larger than their torsos, an opening that does not admit the small torso probe will also prevent head first entry into an opening by a child.

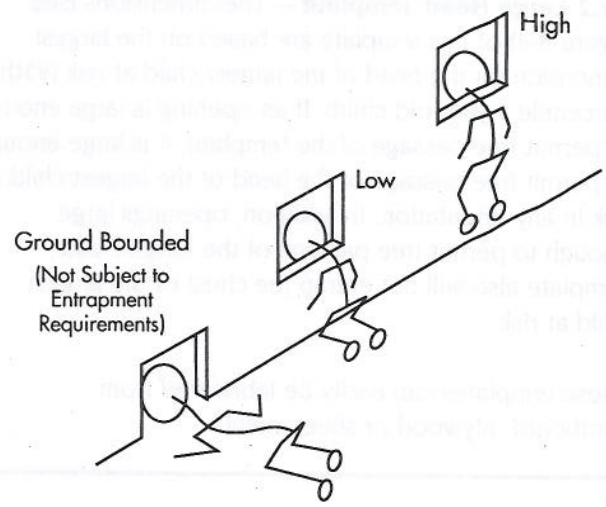

Figure B-1. Examples of Completely Bounded Openings

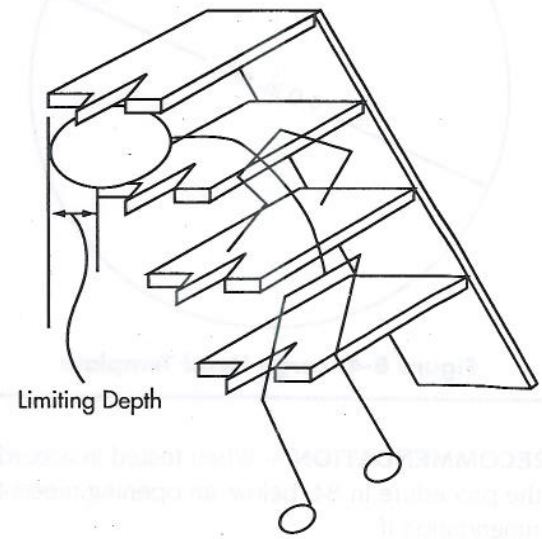

Figure B-2. Completely Bounded Openings with Limited Depth

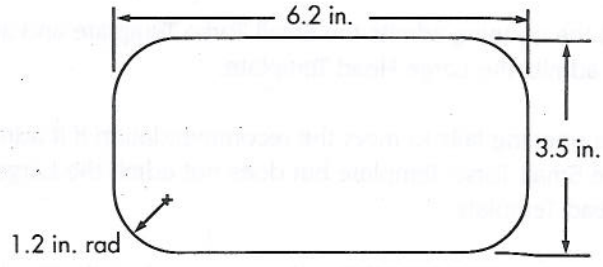

Figure B-3. Small Torso Template

B2.2 Large Head Template — The dimensions (see Figure B-4) of this template are based on the largest dimension on the head of the largest child at risk (95th percentile 5-year-old child). If an opening is large enough to permit free passage of the template, it is large enough to permit free passage of the head of the largest child at risk in any orientation. In addition, openings large enough to permit free passage of the Large Head Template also will not entrap the chest of the largest child at risk.

These templates can easily be fabricated from cardboard, plywood or sheet metal.

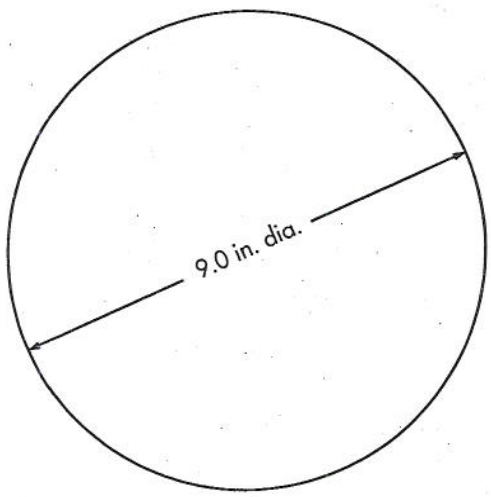

Figure B-4. Large Head Template

B3. RECOMMENDATION — When tested in accordance with the procedure in B4. below, an opening meets the recommendation if:

(1) the opening does not admit the Small Torso Template,

or

(2) the opening admits the Small Torso Template and also admits the Large Head Template.

An opening fails to meet the recommendation if it admits the Small Torso Template but does not admit the Large Head Template.

B4. TEST PROCEDURE — Attempt to place the Small Torso Template in the opening with the plane of the template parallel to the plane of the opening. While keeping it parallel to the plane of the opening, the template should be rotated to its most adverse orientation i.e., major axis of template oriented parallel to the major axis of the opening. If the Small Torso Template can be freely inserted through the opening, place the Large Head Template in the opening, again with the plane of the template parallel to the plane of the opening, and attempt to freely insert it through the opening. The test procedure is illustrated in Figure B-5.

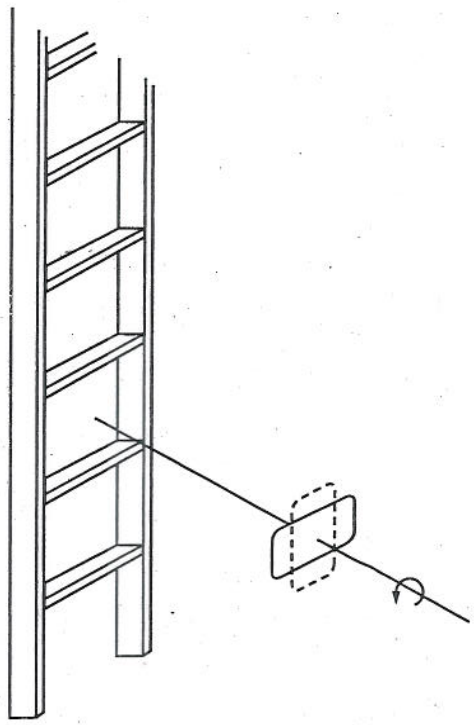

Test procedures and performance criteria for completely-bounded openings.

Place the Small Torso Template in the opening with the plane of the template parallel to the plane of the opening. Rotate the template while keeping it parallel to the opening.

If the Small Torso Template can be inserted into the opening, place the Large Head Template into the opening so its plane is parallel to the plane of the opening.

An opening can pass this test when tested in accordance with the above procedures in one of two ways: 1) the opening does not admit the Small Torso Template when it is rotated to any orientation about its own axis, or 2) the opening admits the Small Torso Template and also admits the Large Head Template. An opening fails the test under the following conditions: the opening admits the Small Torso Template but does not admit the Large Head Template.

Figure B-5. Entrapment Test for Completely-Bounded Openings

B5. COMPLETELY-BOUNDED OPENINGS WHERE DEPTH OF PENETRATION IS A CRITICAL ISSUE — The configuration of some openings may be such that the depth of penetration is a critical issue for determining the entrapment potential. This is a special case for which separate test procedures are necessary.

For example, consider a vertical wall or some other barrier behind a stepladder. The entrapment potential depends not only on the dimensions of the opening between adjacent steps but also on the horizontal space between the lower boundary of the opening and the barrier. A child may enter the opening between adjacent steps feet first and may proceed to pass through the space between the rear of the lower step and the barrier and become entrapped when the child's head is unable to pass through either of these two openings. In effect, there are openings in two different planes each of which has the potential for head entrapment and should, therefore, be tested.

Figure B-6 illustrates these two planes for a stepladder as well as for a generic opening. Plane A is the plane of the completely bounded opening in question and Plane B is the plane of the opening encompassing the horizontal space between the lower boundary of the opening in Plane A and the barrier that should also be tested against the entrapment recommendations.

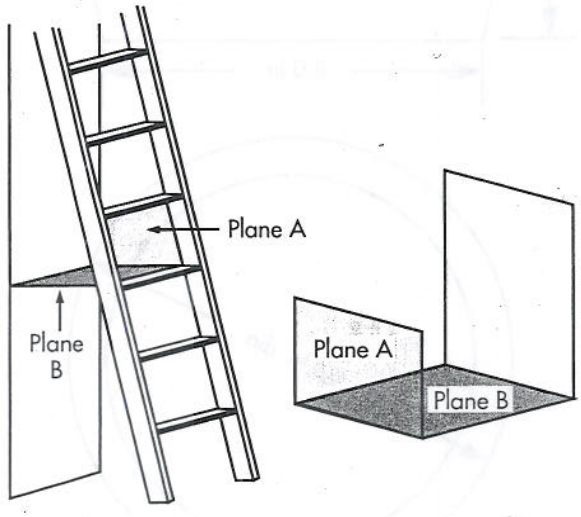

Figure B-6. Examples of Completely-Bounded Openings Where Depth of Penetration is a Critical Issue

The procedures and performance criteria for testing openings where the depth of penetration is a critical issue depend on a series of questions, as described below.

The first step is to determine whether or not the smallest user at risk can enter the opening in Plane A. The Small Torso Template is used to test this opening as follows:

Place the Small Torso Template in the opening in Plane A with its plane parallel to Plane A; rotate the template to its most adverse orientation with respect to the opening while keeping it parallel to Plane A. Does the opening in Plane A admit the Small Torso Template in any orientation when rotated about its own axis?

NO — If the opening in Plane A does not admit the Small Torso Template in any orientation, then the opening is small enough to prevent either head first or feet first entry by the smallest user at risk and is not an entrapment hazard. The opening meets the recommendations.

YES — If the opening in Plane A admits the Small Torso Template, then the smallest user at risk can enter the opening in Plane A. The entrapment potential depends on whether or not the smallest user at risk can also enter the opening in Plane B. The Small Torso Template is again used to test this opening as follows: With the plane of the Small Torso Template parallel to the opening in Plane B and with the template's major axis (i.e., the 6.2-inch dimension) parallel to Plane A, does the opening in Plane B admit the Small Torso Template?

NO — If the opening in Plane B does not admit the Small Torso Template, then it is small enough to prevent head or feet first entry by the smallest user at risk. Therefore the depth of penetration into the opening in plane A is insufficient to result in entrapment of the smallest user at risk. The opening meets the recommendations.

YES — If the opening in Plane B admits the Small Torso Template, then the smallest user at risk can enter the opening in Plane B feet first. The entrapment potential depends on whether or not the Large Head Template can exit the opening in Plane A when tested as follows:

Place the Large Head Template in the opening in Plane A with its plane parallel to Plane A. Does the opening in Plane A admit the Large Head Template?

NO — If the opening in Plane A does not admit the Large Head Template, then a child whose torso can enter the opening in Plane A as well as the opening in Plane B, may become entrapped by the head in the opening in Plane A. The opening does not meet the recommendations.

YES — If the opening in Plane A admits the Large Head Template, then the largest user at risk can exit the opening in Plane A. The entrapment potential depends on whether or not the largest user at risk can also exit the opening in Plane B. The Large Head Template is used to test this as follows:

With the plane of the Large Head Template parallel to the opening in Plane B, does the opening in Plane B admit the Large Head Template?

NO — If the opening in Plane B does not admit the Large Head Template, then the largest user at risk cannot exit the opening in Plane B. This presents an entrapment hazard because a child's torso may enter the openings in Plane A and Plane B, and a child's head may pass through the opening in Plane A but become entrapped in the opening in Plane B. The opening does not meet the recommendations.

YES — If the opening in Plane B admits the Large Head Template, then the largest user at risk can exit the opening in Plane B so there is no entrapment hazard. The openings in Plane A and Plane B meet the recommendations.

B6. Non-Rigid Openings — Climbing components such as flexible nets are also a special case for the entrapment tests because the size and shape of openings on this equipment can be altered when force is applied, either intentionally or simply when a child climbs on or falls through the openings. Children are then potentially at risk of entrapment in these distorted openings.

B6.1 Test Fixtures — The procedure for determining conformance to the entrapment recommendations for non-rigid openings requires two three-dimensional test probes which are illustrated in Figures B-7 and B-8 and are applied to an opening in a non-rigid component with

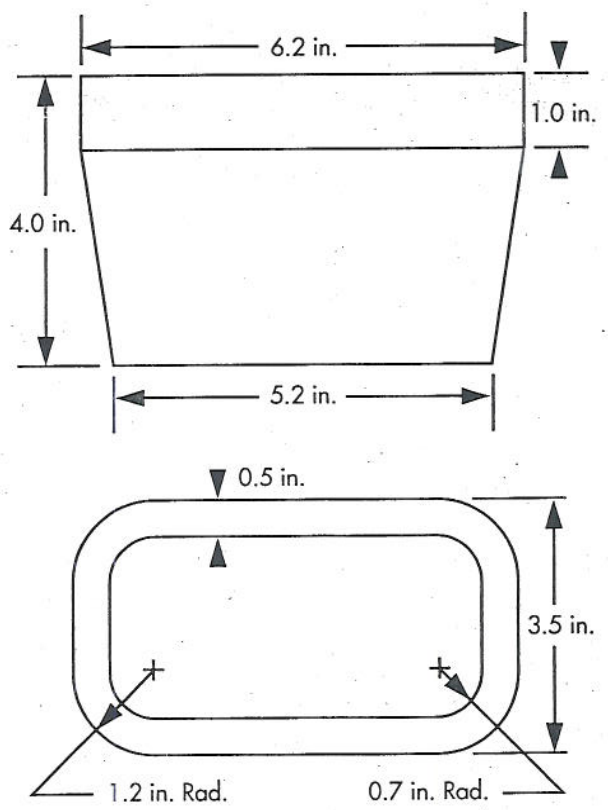

Figure B-7. Small Torso Probe

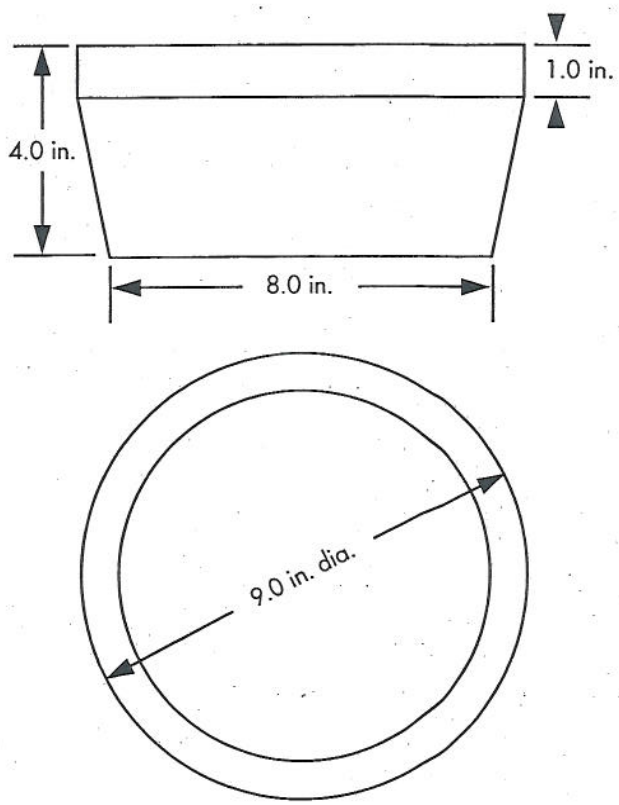

Figure B-8. Large Head Probe

a force of up to 50 pounds. These test probes may be purchased from NRPA [12].

B6.2 Recommendations — When tested in accordance with the procedure in B6.3 below, a non-rigid opening may meet the recommendations in one of two ways:

(1) The opening does not permit complete passage of the Small Torso Probe when tested in accordance with the procedure in B6.3 below.

(2) The opening allows complete passage of the Small Torso Probe and the Large Head Probe when tested in accordance with the procedure in B6.3 below.

A non-rigid opening does not meet the entrapment recommendations if it allows complete passage of the Small Torso Probe but does not allow complete passage of the Large Head Probe.

B6.3 Test Procedure — Place the Small Torso Probe in the opening, tapered end first, with the plane of its base parallel to the plane of the opening. While keeping its base parallel to the plane of the opening, rotate the probe to its most adverse orientation (major axis of probe parallel to major axis of opening). Determine whether the probe can be pushed or pulled through the opening by a force no greater than 50 pounds. If the Small Torso Probe cannot pass completely through the opening, it meets the recommendations.

If the Small Torso Probe passes completely through the opening, place the Large Head Probe in the opening with the plane of its base parallel to the plane of the opening. Again attempt to push or pull the probe through the opening with a force no greater than 50 pounds. If the Large Head Probe can pass completely through the opening, it meets the recommendations.

APPENDIX E
Noteworthy Changes to the 1997 Handbook

Maximum Equipment Height

- Added maximum height recommendations for horizontal ladders for both preschool-age and school-age children (12.1.5) and a maximum height recommendation for swings for preschool-age children (12.6.2). These recommendations were added to minimize fall injuries.

Surfacing

- Added information on the use of shredded tires as a protective surfacing material (Table 1 and Appendices C and D). CPSC has received many questions on the shock absorbing properties of shredded tires. While CPSC has not conducted tests on these materials, test data obtained from manufacturers indicates they have superior shock absorbing properties and should be considered as a possible protective surfacing material.

Maintenance

- Revised the maintenance checklist at Appendix A to make it easier to keep public playgrounds maintained for greater safety.

Lead Paint

- Added information on how to address playground equipment with leaded paint (8.1). During 1996, it was discovered that a number of older playgrounds had equipment with paint containing a high level of lead. This new information regarding lead in paint was added to draw attention to this problem and provide information on how to eliminate it.

Use Zones

- Revised recommendations on use (fall) zones to permit use (fall) zones of certain equipment to overlap (5.1.1). Requiring a 12 foot separation between individual pieces of stationary equipment is believed to be excessive and has been burdensome to some child care facilities with limited space for a playground. CPSC does not believe that the reduction in use zones will increase the likelihood of injuries resulting from falls.

- Added use zone recommendations for tot swings (5.1.3). The use zone to the front and rear of single-axis swings is based on the maximum trajectory of a child deliberately jumping from a swing. The CPSC recognizes that children using tot swings are unlikely to engage in this behavior and therefore recommends use zones less than those for conventional single-axis swings.

Protrusions

- Added recommendations addressing clothing entanglement hazard of protrusions on slides and protrusions that point upwards (9.4) and a warning concerning drawstring entanglement (9.2). Incidents of clothing and drawstring entanglement on certain protrusions and other configurations were not adequately addressed by the previous general protrusion recommendations in Section 9.2.

Climbing Ropes

- Added recommendation for acceptable climbing ropes (12.1.7). The addition provides a means to determine when a rope that is secured at both ends does not present a strangulation hazard. The previous edition of the handbook did not provide a means to determine when the rope was secured.

Slides

- Changed recommendations for slides with curved chute cross sections (12.4.4). This change harmonizes the recommendations for these slides with the requirements in the ASTM F1487 voluntary standard.

- Added definition for embankment slides and added an exit use zone recommendation (12.4.6). These were added to clarify what is an embankment slide and what use zone is recommended at the exit.

- Added recommendations for roller slides (12.4.9). These were added to harmonize the CPSC recommendations with the ASTM F1487 voluntary standard.

- Added new figure to clarify how to measure slide slope (Fig. 18). This was added to clarify the intent of the previous recommendation.

Swings

- Added recommendation that fiber ropes not be used to suspend swings (12.6.1). Fiber ropes that unraveled during use have been involved in strangulation incidents.

- Added swing seat height recommendations for all swings (12.6.2 & 12.6.3). These recommendations are intended to minimize cratering of loose-fill protective surfacing under the swings.

Seesaws

- Added a recommendation for maximum angle of fulcrum seesaws (12.3). The addition is intended to minimize the likelihood that a child will be propelled forward when the seesaw reaches its maximum height.

Other Noteworthy Changes

- Revised the introduction to state that the guidelines in the handbook do not apply to adult fitness trail equipment, soft contained play equipment, or water play facilities (1). The maximum user of playground equipment covered by the recommendations in this handbook is a 95th percentile 12 year old. Therefore, certain dimensions on adult fitness trail equipment may not apply. Soft contained play equipment is generally designed to prevent falls, therefore, the surfacing and use zone recommendations may not apply. Water play facilities are relatively new and were not considered when the recommendations in the handbook were being drafted.

- Added list of equipment not recommended for preschool-age children and provided a list identifying where to find specific recommendations for preschool-age equipment (6.3). These additions are for the convenience of persons seeking information on playground equipment for preschool-age children.

- Changed the recommendations for the diameter of handgripping components (10.2.1). At the time the recommendations for the 1991 handbook were being drafted ladder rungs were commonly fabricated from 1¼ inch steel pipe having an outside diameter (O.D.) of 1.66 inches. Since that time, steel pipe with an O.D. of 1.5 inches has become readily available and is closer to the optimum size recommended for components that will be grasped by a child to support full body weight.

- Changed the recommendation for handrail height on stairways (10.3.1). Handrail height more appropriate for preschool-age children has been added.

This Handbook is in the public domain. This copy is in camera-ready format. It may be reproduced in whole or in part without permission and in unlimited quantities. Also, the Handbook, in its entirety or in text only format, is available for downloading/printing at CPSC's World Wide Web site on the Internet. The CPSC Web address is: **http://www.cpsc.gov**

If reproduced, the Commission would appreciate knowing how it is used. Send this information:

Office of Information and Public Affairs
U.S. Consumer Product Safety Commission
Washington, D.C. 20207.

Public Playground Safety Checklist

Here are 10 important tips for parents and community groups to keep in mind to help ensure playground safety.

1. Make sure ***surfaces*** around playground equipment have at least 12 inches of wood chips, mulch, sand, or pea gravel, or are mats made of safety-tested rubber or rubber-like materials.

2. Check that protective ***surfacing extends*** at least 6 feet in all directions from play equipment. For swings, be sure surfacing extends, in back and front, twice the height of the suspending bar.

3. Make sure play structures more than 30 inches high are ***spaced*** at least 9 feet apart.

4. Check for ***dangerous hardware,*** like open "S" hooks or protruding bolt ends.

5. Make sure ***spaces*** that could trap children, such as openings in guardrails or between ladder rungs, measure less than 3.5 inches or more than 9 inches.

6. Check for ***sharp points or edges*** in equipment.

7. Look out for ***tripping hazards,*** like exposed concrete footings, tree stumps, and rocks.

8. Make sure elevated surfaces, like platforms and ramps, have ***guardrails*** to prevent falls.

9. Check ***playgrounds regularly*** to see that equipment and surfacing are in good condition.

10. ***Carefully supervise children*** on playgrounds to make sure they're safe.

For additional copies, write: Playground Checklist, CPSC, Washington, DC 20207; call CPSC's toll-free hotline at 1-800-638-2772; or visit CPSC's web site at www.cpsc.gov.

009711

U.S. CONSUMER PRODUCT
SAFETY COMMISSION

WASHINGTON D.C. 20207

AN EQUAL OPPORTUNITY EMPLOYER

OFFICIAL BUSINESS
PENALTY FOR PRIVATE USE, $300