AMENDMENT OF SOLICITATION/MODIFICATION OF CONTRACT	1. Contract Number	Page of Pages 1 | 216

2. Amendment/Modification Number	3. Effective Date	4. Requisition/Purchase Request No.	5. Solicitation Caption
DCAM-2010-B-0190-001	7-Dec-10		**Renovation of Emery and Blair Shelters**

6. Issued By:	7. Administered By (If other than line 6)
Code 03B Department of Real Estate Services Contract and Procurement Division 2000 14th Street N.W., Suite 500 Washington, D.C. 20009	Department of Real Estate Services Contract and Procurement Division 2000 14th Street N.W., Suite 500 Washington, D.C. 20009

8. Name and Address of Contractor (No. Street, city, country, state and ZIP Code)		9A. Amendment of Solicitation No.
	(X)	**DcAM-2010-B-0190**
		9B. Dated (See Item 11) 29-Nov-10
		10A. Modification of Contract/Order No.
		10B. Dated (See Item 13)
Code	Facility	

11. THIS ITEM ONLY APPLIES TO AMENDMENTS OF SOLICITATIONS

[ ] The above numbered solicitation is amended as set forth in Item 14. The hour and date specified for receipt of Offers [ ] is extended. [x] is not extended. Offers must acknowledge receipt of this amendment prior to the hour and date specified in the solicitation or as amended, by one of the following methods: (a) By completing Items 8 and 15, and returning 1 copy of the amendment: (b) By acknowledging receipt of this amendment on each copy of the offer submitted; or (c) By separate letter or fax which includes a reference to the solicitation and amendment number. FAILURE OF YOUR ACKNOWLEDGEMENT TO BE RECEIVED AT THE PLACE DESIGNATED FOR THE RECEIPT OF OFFERS PRIOR TO THE HOUR AND DATE SPECIFIED MAY RESULT IN REJECTION OF YOUR OFFER. If by virtue of this amendment you desire to change an offer already submitted, such change may be made by letter or fax, provided each letter or telegram makes reference to the solicitation and this amendment, and is received prior to the opening hour and date specified.

12. Accounting and Appropriation Data (If Required)

13. THIS ITEM APPLIES ONLY TO MODIFICATIONS OF CONTRACTS/ORDERS, IT MODIFIES THE CONTRACT/ORDER NO. AS DESCRIBED IN ITEM 14

(X)	A. This change order is issued pursuant to: (Specify Authority) The changes set forth in Item 14 are made in the contract/order no. in item 10A.
	B. The above numbered contract/order is modified to reflect the administrative changes (such as changes in paying office, appropriation data, etc.) set forth in item 14, pursuant to the authority of 27 DCMR, Chapter 36, Section 3601.2.
	C. This supplemental agreement is entered into pursuant to authority of:
	D. Other (Specify type of modification and authority)

E. IMPORTANT: Contractor [ ] is not, [x] is required to sign this document and return 1 copy to the issuing office.

14. Description of amendment/modification (Organized by UCF Section headings, including solicitation/contract subject matter where feasible.)

1. Attachment A - Pre-Bid Conference sign in sheet 12/6/2010 and other interested parties
2. Attachment B - Pre-Bid Meeting items covered.
3. Attachment C -Architect's addendum letter dated November 30, 2010
4. Attachment D - Blair Shelter Addendum 1 Specifications dated November 30, 2010
5. Attachment E - Emery Shelter Addendum 1 Specifications dated November 30, 2010
6. Attachment F - Blair & Emery Addendum 1 dwgs dated November 30, 2010
7. All other terms and conditions of this solicitation remain the same.

Except as provided herein, all terms and conditions of the document referenced in Item (9A or 10A) remain unchanged and in full force and effect

15A. Name and Title of Signer (Type or print)		16A. Name of Contracting Officer **Diane Wooden**	
15B. Name of Contractor (Signature of person authorized to sign)	15C. Date Signed	16B. District of Columbia Diane Wooden (Signature of Contracting Officer)	16C. Date Signed 12/7/10

GOVERNMENT OF THE DISTRICT OF COLUMBIA
DEPARTMENT OF REAL ESTATE SERVICES
CONSTRUCTION DIVISION

Meeting Sign-In Sheet Template

Project Name: Renovation at Emery and Blair Shelters

Meeting Title: Pre-Bid Walkthrough

Date: 12/6/10 **Time:** 10:00 AM **Location:** Emery and Blair Shelters

Meeting Attendees

Name	Agency/Company	Title / Role	Phone #	Email
Solomon Ikotun	DRES- Construction	PM	202-741-0042	Solomon.ikotun@dc.gov
Silvia Silverman	DRES- Contract & Procurement	Contract Specialist	202-671-1359	Silvia.Silverman@dc.gov
Marion Jones	DRES-Construction			Marion.Jones@dc.gov
ELLIOTT MARSH	JCMCS		240.286.6885	MARSH2042@gmail.com
Dean Mitchell	JCMCS/FH Paschen	Mgr Bus Dev	2025565548	dmitchell@jcmcs.com
Frank Paschen	JCMCS/FH Paschen	Reg Mgr	202257 0653	frankp@fhpaschow.com
Tim Crawford	The LexX Group	PM	240-543-3722	tcrawford@thelexxgroup.com
DAANEN SHACHAN	ARS ENERGY	Manager	202-327-0445	daanens@ars-energy.net
AL VAUGHN	LEXXUS DEVELOPMENT	COO	202-291-0010	avaughn@lexxusdev.com
CHRIS CARTER	LEXXUS DEVELOPMENT	CEO	202-291-0010	ccarter@lexxusdev.com
LAMOND BROWN	EEC of DC	BD Mgr.	202-435-2189	lamondb@eecinc.com
MOHAMED JALLOH	EEC of DC	PM	202 635-2189	mohamed@eecinc.com
VIK Singh	SCM INC.	PM	2/832-7250	VIK@SpecialtyConstruction.Net
Abe Adelekan	MICON CONSTRUCTIONS	PM	202-636-3930	INFO@MICONCONSTRUCTIONS.COM
ZEWDU Haileyesus	Z COMPANIES, LLC	President	202-270-0280	dmvconstruction@gmail.com
John Harmon	City Construction	DoC	202-577-6041	jharmon@cityconstructionllc.com
MIKE SMITH	SMITH & SONS, LLC	OWNER	202-232-2236	smithandsons@hotmail.com
Torrey Winston	F&L Construction	PM	202-678-5188	Winstllc@comcast.net
Nick Hunter	POUNDS Construction	VP, Business Development	2/543-9431	nick@poundsdc.com
Bill Turner	Combined Services	owner	703-352-9070	wturner@csiva.us

GOVERNMENT OF THE DISTRICT OF COLUMBIA
DEPARTMENT OF REAL ESTATE SERVICES
CONSTRUCTION DIVISION

Meeting Sign-In Sheet Template

Project Name: Renovation at Emery and Blair Shelters

Meeting Title: : Pre-Bid Walkthrough

Date: 12/6/10 Time: 10:00 AM Location: **Emery** and Blair Shelters

Meeting Attendees

Name	Agency/Company	Title / Role	Phone #	Email
ROBERT SHAPALIS	GCS / SIGAL	P.M.	703-302-1500	RSHAPALIS@SIGAL.COM
The following expressed interest.				
Terry Flaningam	ITEK Construction + Consulting Inc	Estimator	703-261-6663 x 350	TFlaningam@ITEKConstruction.Com
Paul Freeman	IBTS	PM	703-481-2000 x 250	pfreeman@ibts.org
Neal Byrnes	Goel Services, Inc		202-567-3634	Neal.byrnes@8a.com
Marisa Padula Alvarado	Padula Const. Co., Inc		202-543-7722	marisa@padulaco.com

DCAM-2010-B-0190
PRE BID CONFERENCE
FOR THE RENOVATION OF BLAIR AND EMERY SHELTERS
ITEMS COVERED

Contract Specialist: Silvia Silverman;
Contracting Officer's Technical Representative: Mr. Solomon Ikotun, of the Construction Division

- The site visit is extremely important as it gives each contractor an opportunity to familiarize him or herself with the requirements of the project and the site. It is to the bidders benefit to make sure that quantities and dimensions are confirmed prior to submitting the bids so that they are as accurate as possible.

- Prospective bidders who need to visit the sites for measurements, must contact Mr. Ikotun (202-741-0422) so that arrangements can be made with the property managers.

- This solicitation is for the open market with a 35% SBE subcontracting set aside. If a bid is over $250,000 and it does not include a Subcontracting Plan it will be deemed nonresponsive and shall be rejected.

- The completion time for this solicitation is 180 days from the date indicated in the Notice to Proceed; please note that liquidated damages will be imposed if completion is delayed.

- Prospective bidders should review Section H.1 of the IFB and Article 5 of the Standard Contract Provisions.

- Read the solicitation carefully. Should you have any questions, please send them to the Contract Specialist in writing via e-mail (silvia.silverman@dc.gov) or by fax to 202-442-9506; Send your questions in writing by, no later than, December 24th. The answers will be posted on the OCP website ocp.dc.gov as an amendment to the solicitation. The time for questions is **before** the bid is submitted.

- Section B, contains price breakdown forms. Make sure that you account for all items listed in Section C of this solicitation as well as the plans and specifications which you can obtain from Blue Boy Printing. The lump sums for each of the pricing breakdown forms should be written on Section B.4. Don't forget to include all your administrative cost, and the cost of obtaining bonding for the project.

- Bids are due January 3, 2010 at 2:00 PM. Please have the proposals delivered to the bid room located on the third floor of the Reeves Center, 2000 14th Street, NW, on time. If the bids are even a minute late they will not be opened.

- There are many forms included in the solicitation as an attachment or by reference, you must go to the Office of Contracting and Procurement website www.ocp.dc.gov and

follow the link to Solicitation Attachments; there you will find the forms to be completed and submitted with your proposals. Make sure that all forms required are completely filled out. You may have old forms that you used previously – do not send those, go to the OCP website and download the latest forms.

- Bids that do not include a bid bond or a subcontracting plan will not be considered. As it relates to the subcontracting plan, review the requirements outlined in the solicitation; pay particular attention to Sections B.2 and M. Section M.1.9 specifically lists the information that must be included in the subcontracting plan.

- Notifications of Amendments will not be sent to individual bidders but will be posted on the OCP website.

- As you go through the site visit today or any follow up visits remember that answers that you receive verbally are not part of the solicitation unless they are in writing as part of an amendment. Likewise, if in the course of a site visit there are discussions of additional work to be performed; if it is not in writing posted as an amendment to the Solicitation, it is not to be considered as part of your bid.

- Please check the website daily up until the day of the bid opening. You must acknowledge any modifications posted by signing them and including them in your proposal.

architrave p.c., architects
420 10th street, s.e.
washington, d.c. 20003-2133
(202) 544-1640

30 November 2010

Solomon Ikotun
DC Department of Real Estate Services
2000 14th Street, NW
8th Floor
Washington, DC 20009

RE: Project Name: Blair and Emery Shelters Work
Project Number: PL101C-HS-017
Addendum 1

Mr. Ikotun:

Please issue the following addendum to the construction contract document referenced above.

DRAWINGS, Blair Shelter Renovation at Two Shelters:

DELETE sheet "AB0.1" and INSERT new sheet "AB0.1"with a revision date of 11/16/10.

DELETE sheet "AB1.1" and INSERT new sheet "AB1.1"with a revision date of 11/15/10.

DELETE sheet "AB1.2" and INSERT new sheet "AB1.2" with a revision date of 11/29/10.

DELETE sheet "AB2.3" and INSERT new sheet "AB2.3" with a revision date of 11/15/10.

DELETE sheet "AB4.1" and INSERT new sheet "AB4.1" with a revision date of 11/15/10.

DELETE sheet "AB4.2" and INSERT new sheet "AB4.2" with a revision date of 11/15/10.

DELETE sheet "AB6.2" and INSERT new sheet "AB6.2"with a revision date of 11/15/10.

DELETE sheet "MB-2" and INSERT new sheet "MB-2"with a revision date of 11/15/10.

DELETE sheet "MB-5" and INSERT new sheet "MB-5"with a revision date of 11/15/10.

DELETE sheet "EB-5" and INSERT new sheet "EB-5"with a revision date of 11/15/10.

DELETE sheet "EB-8" and INSERT new sheet "EB-2"with a revision date of 11/15/10.

architrave p.c., architects
420 10th street, s.e.
washington, d.c. 20003-2133
(202) 544-1640

SPECIFICATIONS, Blair Shelter Renovation at Two Shelters:

DELETE Table of Contents and INSERT new Table of Contents dated November 30, 2010.

DELETE "Section 051200 Structural Steel" and INSERT new "Section 051200 Structural Steel" dated November 30, 2010.

DELETE "Section 061000 Rough Carpentry" and INSERT new "Section 061000 Rough Carpentry" dated November 30, 2010.

DELETE "Section 061600 Sheathing" and INSERT new "Section 061600 Sheathing" dated November 30, 2010.

DELETE "Section 072100 Thermal Insulation" and INSERT new "Section 072100 Thermal Insulation" dated November 30, 2010.

DELETE "Section 076101 Flat Seam Metal Roofing" and INSERT new "Section 076101 Flat Seam Metal Roofing" dated November 30, 2010.

DELETE "Section 081100 Steel Doors and Frames" and INSERT new "Section 081100 Steel Doors and Frames" dated November 30, 2010.

INSERT "Section 087100 Door Hardware" dated November 30, 2010.

DELETE "Section 092310 Lime Plaster Repair" and INSERT new "Section 092310 Lime Plaster Repair" dated November 30, 2010.

DELETE "Section 092500 Gypsum and Cement Board" and INSERT new "Section 092500 Gypsum and Cement Board" dated November 30, 2010.

DELETE "Section 102000 Louvers and Vents" and INSERT new "Section 102000 Louvers and Vents" dated November 30, 2010.

DELETE "Section 105220 Fire Extinguisher Cabinets" and INSERT new "Section 105220 Fire Extinguisher Cabinets" dated November 30, 2010.

DELETE "Section 127021 Wood Office Furniture" and INSERT new "Section 127021 Wood Office Furniture" dated November 30, 2010.

DELETE "Section 127031 Lateral file Cabinets" and INSERT new "Section 127031 Lateral file Cabinets" dated November 30, 2010.

architrave p.c., architects
420 10th street, s.e.
washington, d.c. 20003-2133
(202) 544-1640

DELETE "Section 127041 Desk Chair" and INSERT new "Section 127041 Desk Chair" dated November 30, 2010.

DELETE "Section 102900 Bird Netting".

DELETE "Section 233113 Metal Ducts" and INSERT new "Section 233113 Metal Ducts" dated November 30, 2010.

DRAWINGS, Emery Shelter Renovation at Two Shelters:

DELETE sheet "AE0.1" and INSERT new sheet "AE0.1" with a revision date of 11/29/10.

DELETE sheet "AE3.3" and INSERT new sheet "AE3.3" with a revision date of 11/29/10.

DELETE sheet "ME-4" and INSERT new sheet "ME-4"with a revision date of 11/15/10.

SPECIFICATIONS, Emery Shelter Renovation at Two Shelters:

DELETE "Section 020802 PCB and Mercury Removal" and INSERT new "Section 020802 PCB and Mercury Removal" dated November 30, 2010.

DELETE "Section 051200 Structural Steel" and INSERT new "Section 051200 Structural Steel" dated November 30, 2010.

DELETE "Section 061000 Rough Carpentry" and INSERT new "Section 061000 Rough Carpentry"
dated November 30, 2010.

DELETE "Section 102000 Louvers and Vents" and INSERT new "Section 102000 Louvers and Vents"
dated November 30, 2010.

DELETE "Section 233113 Metal Ducts" and INSERT new "Section 233113 Metal Ducts" dated November 30, 2010.

I have send PDF files for each specification and drawing listed above as attachments to a separate email message. We will follow-up with hard copies of the addendum drawings and specifications.

Rebecca L. Stevens, AIA

GOVERNMENT OF THE DISTRICT OF COLUMBIA
DEPARTMENT OF REAL ESTATE SERVICES

TITLE PAGE SPECIFICATONS

ISSUING OFFICE:
The Construction Procurement Branch
2000 14th Street, N.W., 3rd Floor
Washington, D.C. 20009

Requests for clarification or interpretation of Bid Documents prior to date of Bid Opening:

ADDRESS TO: **Administrator**
Department of Real Estate Services
Construction Services Administration
Frank Reeves Municipal Center
5th Floor
2000 14th Street, N.W.
Washington, D.C. 20009

Prospective Bidders

To bid this contract, detach the bid forms found in the Bid Documents, fill out all forms along with Bid Guaranty as required, and submit it to the Issuing Office prior to the time of the bid opening.

TABLE OF CONTENTS

SECTION NO.	TITLE
DIVISION 1	**GENERAL REQUIREMENTS**
011000	Summary
012200	Unit Prices
013100	Project Management and Coordination
013200	Construction Progress Documentation

013233 Photographic Documentation
013300 Submittal Procedures
013591 Historic Treatment Procedures
014000 Quality Requirements
014200 References
015000 Temporary Facilities and Controls
016000 Product Requirements
017000 Execution Requirements
017700 Close-out Procedures
017823 Operations and Maintenance Manuals
017839 Project Record Documents

DIVISION 2 EXISTING CONDITIONS

020800 Asbestos Abatement
020801 Lead Based Paint Hazard Reduction
020802 PCB and Mercury Removal
024119 Selective Structure Demolition
024120 Cutting & Patching

DIVISION 4 MASONRY

040120 Lime Mortar
042113 Brick Masonry

DIVISION 5 METALS

051200 Structural Steel
057000 Decorative Metal

DIVISION 6 WOOD AND PLASTIC

061000 Rough Carpentry
061600 Sheathing
062013 Exterior Finish Carpentry
064020 Interior Finish Carpentry
064400 Ornamental Woodwork
066100 Shower Receptor

DIVISION 7 THERMAL AND MOISTURE PROTECTION

072100 Thermal Insulation
076101 Flat Seam Metal Roofing
078413 Penetration Firestopping
079200 Joint Sealants

DIVISION 8	**DOORS AND WINDOWS**
081100	Steel Doors and Frames
081433	Stile and Rail Wood Doors
083113	Access Doors and Frames
084110	Aluminum-Framed Entrances
084114	Fire Rated Entrances
087100	Door Hardware
088000	Glazing
DIVISION 9	**FINISHES**
091110	Non-Load-Bearing Steel Framing
092310	Lime Plaster Repair
092500	Gypsum and Cement Board
093100	Tiling
095113	Acoustical Panel Ceilings
096401	Wood Floor Refinishing
096514	Stair Tread Cover
096519	Resilient Floor Tile
096530	Resilient Wall Base and Accessories
099113	Exterior Painting
099123	Interior Painting
DIVISION 10	**SPECIALTIES**
101250	Bulletin Boards
102000	Louvers and Vents
102800	Toilet and Bath Accessories
105220	Fire Extinguisher Cabinets
105230	Fire Extinguishers
DIVISION 12	**FURNISHINGS**
123661	Solid Surface Countertop
127021	Wood Office Furniture
127031	Lateral File Cabinets
127041	Desk Chair
DIVISION 21	**FIRE SUPPRESSION**
211313	Fire Suppression System

DIVISION 22 PLUMBING

220517	Sleeves and Sleeve Seals for Plumbing Piping
220518	Escutcheons for Plumbing Piping
220523	General-Duty Valves for Plumbing Piping
220529	Hangers and Supports for Plumbing Piping and Equipment
220553	Identification for Plumbing Piping and Equipment
220719	Plumbing Insulation
221116	Domestic Water Piping
221316	Sanitary Waste & Vent Piping
224216.16	Commercial Sinks
224223	Commercial Showers

DIVISION 23 HEATING VENTILATING AND AIR CONDITIONING

230513	Common Motor Requirements for HVAC
230517	Sleeves and Sleeve Seals for HVAC Piping
230518	Escutcheons for HVAC Piping
230529	Hangers and Supports for HVAC Piping
230593	Testing, Adjusting and Balancing for HVAC
230719	HVAC Piping Insulation
232213	Steam and Condensate Heating Piping
233113	Metal Ducts
233300	Air Duct Accessories
233416	Centrifugal HVAC Fans
233423	HVAC Power Ventilators
233713	Diffuser, Registers, and Grills
238223	Unit Ventilators

DIVISION 26 ELECTRICAL

260519	Low-Voltage Electrical Power Conductors and Cable
260526	Grounding and Bounding for Electrical Systems
260529	Hangers and Supports for Electrical Systems
260533	Raceways and Boxes for Electrical Systems
260544	Sleeves and Sleeve Seals for Electrical Raceways and Cabling
260553	Identification for Electrical Systems
260923	Lighting Control Devices
262416	Panelboards
262726	Wiring Devices
265100	Interior Lighting

DIVISION 28 ELECTRONIC SAFETY AND SECURITY

283111	Digital, Addressable, Fire Alarm System

DIVISION 32 EXTERIOR IMPROVEMENTS

320000 Subdrainage

END OF TABLE OF CONTENTS

SECTION 051200 - STRUCTURAL STEEL

PART 1 - GENERAL

1.1 RELATED DOCUMENTS

A. Drawings and general provisions of the Contract, including General and Supplementary Conditions and Division 1 Specification Sections, apply to this Section.

1.2 SUMMARY

A. This Section includes structural steel fabrication and erection of structural steel work, as shown on drawings including schedules, notes, and details showing size and location of members, typical connections, and types of steel required.

1. Structural steel is that work defined in American Institute of Steel Construction (AISC) "Code of Standard Practice" and as otherwise shown on drawings.

B. Design of Connections: Design connections as indicated. Details shown are typical; similar details apply to similar conditions, unless otherwise indicated.

1. Verify dimensions at site whenever possible without causing delay in the work.

2. Promptly notify COTR whenever information for design of connections for any portion of the structure is not clearly indicated.

C. This Section includes structural steel.

1.3 SUBMITTALS

A. General: Submit each item in this Article according to the Conditions of the Contract and Division 1 Specification Sections.

B. Product Data for each type of product specified or manufacturer's specifications and installation instruction for following products. Include laboratory test reports and other data to show compliance with specifications (including specified standards).

1. Structural steel (each type), including certified copies of mill reports covering chemical and physical properties.

2. Structural steel primer paint.

3. Shrinkage-resistant grout.

C. Shop Drawings detailing fabrication of structural steel components.

1. Include details of cuts, connections, splices, camber, holes, and other pertinent data.

2. Indicate welds by standard AWS symbols, distinguishing between shop and field welds, and show size, length, and type of each weld.

3. Indicate type, size, and length of bolts, distinguishing between shop and field bolts.

4. Include Shop Drawings prepared under the supervision of a Professional Engineer.

D. Mill test reports signed by manufacturers certifying that their products, including the following, comply with requirements.

1. Structural steel, including chemical and physical properties.

2. Bolts, nuts, and washers, including mechanical properties and chemical analysis.

3. Shop primers.

4. Nonshrink grout.

1.4 QUALITY ASSURANCE

A. Installer Qualifications: Engage an experienced Installer who has completed structural steel work similar in material, design, and extent to that indicated for this Project and with a record of successful in-service performance.

B. Fabricator Qualifications: Engage a firm experienced in fabricating structural steel similar to that indicated for this Project and with a record of successful in-service performance, as well as sufficient production capacity to fabricate structural steel without delaying the Work.

C. Codes and Standards: Comply with applicable provisions of the following specifications and documents, except as otherwise indicated:

1. American Institute of Steel Construction (AISC) “Code of Standard Practice for Steel Buildings and Bridges.”

a. Nothing in this Code of Practice shall be construed as adding in any way to the Government’s responsibility under the provisions of this Contract.

b. Where reference is made in this Code of Practice to inspection of Work. The party responsible for those inspection services is as defined elsewhere in the drawings and specifications.

c. Paragraph 4.2.1 of the above code is hereby modified by deletion of the following sentence:

1) "This approval constitutes the Government's acceptance of all responsibility for the design adequacy of any detail configuration of connections developed by the fabricator as a part of his preparation of these shop drawings."

2. AISC's "Specification for Structural Steel Buildings--Allowable Stress Design and Plastic Design" including "Commentary".

3. AISC's "Specification for Allowable Stress Design of Single-Angle Members." American Welding Society (AWS) D1.1 "Structural Welding Code – Steel."

4. ASTM A 6 "Specification for General Requirements for Rolled Steel Plates, Shapes, Sheet Piling, and Bars for Structural Use."

D. Welding Standards: Comply with applicable provisions of AWS D1.1 "Structural Welding Code--Steel." Qualifications for Welding Work: Qualify welding procedures and welding operators in accordance with AWS "Qualification" requirements.

1. Present evidence that each welder has satisfactorily passed AWS qualification tests for welding processes involved and, if pertinent, has undergone recertification. Provide certification those welders to be employed in work satisfactorily passed AWS qualification tests.

2. If re-certification of welders is required, retesting will be Contractor's responsibility.

1.5 DELIVERY, STORAGE, AND HANDLING

A. Deliver structural steel to Project site in such quantities and at such times to ensure continuity of installation.

B. Store materials to permit easy access for inspection and identification. Keep steel members off ground by using pallets, platforms, or other supports. Protect steel members and packaged materials from erosion and deterioration.

1. Store fasteners in a protected place. Clean and relubricate bolts and nuts that become dry or rusty before use.

2. Do not store materials on structure in a manner that might cause distortion or damage to members or supporting structures. Repair or replace damaged materials or structures as directed.

PART 2 - PRODUCTS

2.1 MATERIALS

A. Metal Surfaces, General: For fabrication of work that will be exposed to view, use only materials that are smooth and free of surface blemishes including pitting, rust and scale seam marks, roller marks, rolled trade names, and roughness. Remove such blemishes by grinding, or by welding and grinding, prior to cleaning, treating and applying surface finishes.

B. Structural Steel Angles, Plates and Bars: ASTM A 36.

C. Cold-Formed Structural Steel Tubing: ASTM A 500, Grade B.

D. Anchor Rods, Bolts, Nuts, and Washers: As follows: ASTM A 307, Grade A, regular low-carbon steel bolts and nuts.

E. Epoxy Bolts shall be galvanized steel Fy=58ksi with a minimum allowable shear capacity of 2.4k and a minimum allowable tensile capacity of 1.5k into solid masonry.

F. Welding Electrodes for welding: Comply with AWS requirements.

2.2 PRIMER

A. Primer: Fabricator's standard lead- and chromate-free, nonasphaltic, rust-inhibiting primer.

2.3 FABRICATION

A. Shop Fabrication and Assembly: Fabricate and assemble structural steel in shop to greatest extent possible. Fabricate structural steel according to AISC specifications referenced in this Section and as indicated on final approved shop drawings.

B. Thermal Cutting: Perform thermal cutting by machine to greatest extent possible.

1. Plane thermally cut edges to be welded.

C. Finishing: Accurately mill ends of columns and other members transmitting loads in bearing.

D. Holes: Provide holes required for securing other work to structural steel framing and for passage of other work through steel framing members, include details Shop Drawings.

1. Cut, drill, or punch holes perpendicular to metal surfaces. Do not flame-cut holes or enlarge holes by burning. Drill holes in bearing plates.

2. Weld threaded nuts to framing and other specialty items as indicated to receive other work.

E. Connections: Weld or bolt shop connections, as indicated.

2.4 SHOP PRIMING

A. General: Shop-paint structural steel, except those members or portions of members to be embedded in concrete or mortar. Paint embedded steel that is partially exposed on exposed portions and initial 2 inches of embedded areas only.

1. Do not paint surfaces to be welded.

2. Do not paint surface schedules to receive sprayed-on fireproofing.

3. Apply two coats of paint to surfaces that are inaccessible after assembly or erection. Change color of second coat to distinguish it from first.

B. Priming: Immediately after surface preparation, apply primer according to manufacturer's instructions and at rate recommended by SSPC to provide a dry film thickness of not less than 1.5 mils. Use priming methods that result in full coverage of joints, corners, edges, and exposed surfaces.

1. Stripe paint corners, crevices, bolts, welds, and sharp edges.

2. Apply two coats of shop paint to inaccessible surfaces after assembly or erection. Change color of second coat to distinguish it from first.

PART 3 - EXECUTION

3.1 EXAMINATION

A. Before erection proceeds, and with the steel erector present, verify elevations of concrete and masonry bearing surfaces and locations of anchorages for compliance with requirements.

B. Do not proceed with erection until unsatisfactory conditions have been corrected.

3.2 PREPARATION

A. Provide temporary shores, guys, braces, and other supports during erection to keep structural steel secure, plumb, and in alignment against temporary construction loads and loads equal in intensity to design loads. Remove temporary supports when permanent structural steel, connections, and bracing are in place, unless otherwise indicated.

1. Do not remove temporary shoring supporting composite deck construction until cast-in-place concrete has attained its design compressive strength.

3.3 ERECTION

A. Set structural steel accurately in locations, elevations, and alignment indicated and according to AISC specifications referenced in this Section.

B. Temporary Shoring and Bracing: Provide temporary shoring and bracing members with connections of sufficient strength to bear imposed loads. Remove temporary members and connections when permanent members are in place and final connections are made. Provide temporary guy lines to achieve proper alignment of structures as erection proceeds.

C. Temporary Planking: Provide temporary planking and working platforms as necessary to effectively complete work.

D. Adhesive Anchors: Use only injection tools and mixing nozzles as recommended by the manufacturer. Install in accordance with manufacturer’s written instructions.

E. Maintain erection tolerances of structural steel within AISC's "Code of Standard Practice for Steel Buildings and Bridges."

F. Align and adjust various members forming part of complete frame or structure before permanently fastening. Before assembly, clean bearing surfaces and other surfaces that will be in permanent contact. Perform necessary adjustments to compensate for discrepancies in elevations and alignment.

1. Level and plumb individual members of structure.

2. Establish required leveling and plumbing measurements on mean operating temperature of structure. Make allowances for difference between temperature at time of erection and mean temperature at which structure will be when completed and in service.

G. Field Assembly: Set structural frames accurately to lines and elevations indicated. Align and adjust various members forming part of complete frame or structure before permanently fastening. Clean bearing surfaces and other surfaces that will be in

permanent contact before assembly. Perform necessary adjustments to compensate for discrepancies in elevations and alignment.

H. Do not use thermal cutting during erection.

I. Finish sections thermally cut during erection equal to a sheared appearance.

J. Do not enlarge unfair holes in members by burning or by using drift pins. Ream holes that must be enlarged to admit bolts.

K. Erection Bolts: On exposed welded construction, remove erection bolts, fill holes with plug welds, and grind smooth at exposed surfaces.

1. Comply with AISC Specifications for bearing, adequacy of temporary connections, alignment, and removal of paint on surfaces adjacent to field welds.

L. Gas Cutting: Do not use gas-cutting torches in field for correcting fabrication errors in primary structural framing.

3.4 FIELD CONNECTIONS

A. Install and tighten nonhigh-strength bolts, except where high-strength bolts are indicated.

B. Weld Connections: Comply with AWS D1.1 for procedures, appearance and quality of welds, and methods used in correcting welding work.

1. Comply with AISC specifications referenced in this Section for bearing, adequacy of temporary connections, alignment, and removal of paint on surfaces adjacent to field welds.

3.5 FIELD QUALITY CONTROL

A. Contractor will engage an independent testing, inspection, and inspecting agency to perform field inspections and tests and to prepare test reports in compliance with special inspections required by the Building Code and as specified herein.

1. Inspection and testing agency shall conduct inspections and interpret tests and state in each report whether tested Work complies with or deviates from requirements. Test specimens comply with requirements, and specifically state any deviations there from.

B. Provide access for testing agency to places where structural steel work is being fabricated or produced so that required inspection and testing can be accomplished.

C. Provide testing and inspection agency with one set of current contract documents and approved shop drawings including all approved amendments or clarifications for use in their inspection. Provide work area for layout of drawings.

D. Correct deficiencies in or remove and replace structural steel work that inspections and test reports indicate do not comply with specified requirements. Perform additional tests, at Contractor's expense as necessary to reconfirm any noncompliance of original work and to show compliance of correct work. Corrections of deficiencies noted by the testing and inspection agency does not imply acceptance of the Work.

E. Field-bolted connections will be tested and inspected according to RCSC's "Specification for Structural Joints Using ASTM A 325 or A 490 Bolts."

F. Shop and Field Welding: Inspect and test according to AWS D1.1. as follows:

1. Verify certification of welders and conduct inspections and tests as required. Record types and locations of defects found in work. Record work required and performed to correct deficiencies.

2. Perform visual inspection of all welds.

G. Field Inspection: Inspect all structural steel work, including but not limited to the following, for conformance with the contract documents, the approved shop drawings and AISC requirements.

1. Beams.

2. Connections.

3. Bolts.

4. Welds.

H. Contractor's testing and inspection agency shall submit a letter of certification stamped by the Professional Engineer registered in District of Columbia responsible for all inspection and testing work specified herein, certifying that all structural steel work, including, but not limited to, welded and high-strength bolted connections, has been constructed in accordance with contract documents and approved shop drawings.

I. Reports: Submit inspection and test reports to COTR, and Contractor within one week of work.

3.6 CLEANING

A. Touchup Painting: Cleaning and touchup painting of field welds, bolted connections, and abraded areas of shop paint on structural steel are included in Division 9 Section "Painting."

END OF SECTION 05120

SECTION 061000 - ROUGH CARPENTRY

PART 1 - GENERAL

1.1 RELATED DOCUMENTS

A. Documents referred to the DC Government Bid Documents, which include the Solicitation Documents, Contract Sections, Contract Clauses, Special Contract Requirements and Standard Contract Provisions for Use With Specifications for District of Columbia Government Construction Projects (January 2007) are part hereof the same as if repeated herein.

1.2 SUMMARY

A. Section Includes:

1. Framing with dimension lumber.
2. Framing with engineered wood products.
3. Wood blocking and nailers.
4. Wood furring.
5. Plywood backing panels for electrical and fire protection panels.

B. Related Requirements:
1. Section 061600 "Sheathing."

1.3 DEFINITIONS

A. Exposed Framing: Framing not concealed by other construction.

B. Dimension Lumber: Lumber of 2 inches nominal or greater but less than 5 inches nominal in least dimension.

C. Lumber grading agencies and boards, and the abbreviations used to reference them, include the following:

1. ALSC Board of Review: American Lumber Standards Committee
2. ASLS: American Softwood Lumber Standard
3. NeLMA: Northeastern Lumber Manufacturers' Association.
4. SPIB: The Southern Pine Inspection Bureau.
5. WCLIB: West Coast Lumber Inspection Bureau.

1.4 ACTION SUBMITTALS

A. Product Data: Indicate component materials and dimensions and include construction and application details. For each type of process and factory-fabricated product and for the following products. For the following product:
   1. Engineered wood projects
   2. Metal framing anchors

B. Include data for wood-preservative treatment from chemical treatment manufacturer and certification by treating plant that treated materials comply with requirements. Indicate type of preservative used and net amount of preservative retained.

C. For products receiving a waterborne treatment, include statement that moisture content of treated materials was reduced to levels specified before shipment to Project site.

D. Include copies of warranties from chemical treatment manufacturers for each type of treatment.

1.5 INFORMATIONAL SUBMITTALS

A. Material Certificates: For dimension lumber specified to comply with minimum allowable unit stresses. Indicate species and grade selected for each use and design values approved by the ALSC Board of Review.

1.6 QUALITY ASSURANCE

A. Testing Agency Qualifications: For testing agency providing classification marking for fire-retardant treated material, an inspection agency acceptable to COTR that periodically performs inspections to verify that the material bearing the classification marking is representative of the material tested.

1.7 DELIVERY, STORAGE, AND HANDLING

A. Stack lumber flat with spacers beneath and between each bundle to provide air circulation. Protect lumber from weather by covering with waterproof sheeting, securely anchored. Provide for air circulation around stacks and under coverings.

PART 2 - PRODUCTS

2.1 WOOD PRODUCTS, GENERAL

A. Lumber: DOC PS 20 ASLS and applicable rules of grading agencies indicated. If no grading agency is indicated, provide lumber that complies with the applicable rules of

any rules-writing agency certified by the ALSC Board of Review. Provide lumber graded by an agency certified by the ALSC Board of Review to inspect and grade lumber under the rules indicated.

1. Factory mark each piece of lumber with grade stamp of grading agency.
2. For exposed lumber indicated to receive a stained or natural finish, mark grade stamp on end or back of each piece.
3. Where nominal sizes are indicated, provide actual sizes required by DOC PS 20 for moisture content specified. Where actual sizes are indicated, they are minimum dressed sizes for dry lumber.
4. Provide dressed lumber, S4S, unless otherwise indicated.

B. Maximum Moisture Content of Lumber: 19 percent for 2-inch nominal thickness or less, no limit for more than 2-inch nominal thickness unless otherwise indicated.

C. Engineered Wood Products: Provide engineered wood products acceptable to authorities having jurisdiction and for which current model code research or evaluation reports exist that show compliance with building code in effect for Project.

1. Allowable Design Stresses: Provide engineered wood products with allowable design stresses, as published by manufacturer, that meet or exceed those indicated. Manufacturer's published values shall be determined from empirical data or by rational engineering analysis and demonstrated by comprehensive testing performed by a qualified independent testing agency.

2.2 WOOD-PRESERVATIVE-TREATED LUMBER

A. Preservative Treatment by Pressure Process: AWPA; Use Category UC2 for interior construction not in contact with the ground, Use Category UC3b for exterior construction not in contact with the ground, and Use Category UC4a for items in contact with the ground.

1. Preservative Chemicals: Acceptable to authorities having jurisdiction and containing no arsenic or chromium.

B. Kiln-dry lumber after treatment to a maximum moisture content of 19 percent. Do not use material that is warped or that does not comply with requirements for untreated material.

C. Mark lumber with treatment quality mark of an inspection agency approved by the ALSC Board of Review.

1. For exposed lumber indicated to receive a stained or natural finish, mark end or back of each piece or omit marking and provide certificates of treatment compliance issued by inspection agency.

D. Application: Treat items indicated on Drawings, and the following:

1. Wood cants, nailers, curbs, equipment support bases, blocking, stripping, and similar members in connection with roofing, flashing, vapor barriers, and waterproofing.
2. Wood sills, sleepers, blocking, furring, stripping, and similar concealed members in contact with masonry or concrete.
3. Wood framing and furring attached directly to the interior of below-grade exterior masonry or concrete walls.
4. Wood framing members that are less than 18 inches above the ground in crawlspaces or unexcavated areas.
5. Wood floor plates that are installed over concrete slabs-on-grade.

2.3 DIMENSION LUMBER:

A. General: Provide dimension lumber of grades indicated according to the ALSC Naitonal Grading Rules (NCR) provision of the inspection agency indicated.

B. Framing Other than Non-Load Bearing Partitions: Provide framn of the following grade and species:

1. Grade: #2 Southern Pine

2.4 ENGINEERED WOOD PRODUCTS

A. Source Limitations: Obtain each type of engineered wood product from single source from a single manufacturer.

B. Laminated-Veneer Lumber: Structural composite lumber made from wood veneers with grain primarily parallel to member lengths, evaluated and monitored according to ASTM D 5456 and manufactured with an exterior-type adhesive complying with ASTM D 2559.

1. Manufacturers: Subject to compliance with requirements, available manufacturers offering products that may be incorporated into the Work include, but are not limited to, the following:

a. Boise Cascade Corporation.
b. Finnforest USA.
c. Georgia-Pacific.
d. Jager Building Systems Inc.
e. Louisiana-Pacific Corporation.
f. Pacific Woodtech Corporation.
g. Roseburg Forest Products Co.
h. Standard Structures Inc.

i. Stark Truss Company, Inc.
j. West Fraser Timber Co., Ltd.
k. Weyerhaeuser Company.
l. .

2. Extreme Fiber Stress in Bending, Edgewise: 2600 psi for 12-inch nominal- depth members.
3. Modulus of Elasticity, Edgewise: 1,900,000 psi
4. Compression Parallel to Grain: 2300 psi.
5. Compression Perpendicular to Grain: 750 psi.
6. Horizontal Shear: 285 psi.

2.5 MISCELLANEOUS LUMBER

A. General: Provide miscellaneous lumber indicated and lumber for support or attachment of other construction, including the following:

1. Blocking.
2. Nailers.
3. Furring.

B. For items of dimension lumber size, provide Standard, Stud, or No. 3 grade lumber of any species.

C. For concealed boards, provide lumber with 19 percent maximum moisture content and any of the following species and grades:

1. Mixed southern pine; No. 2 grade; SPIB.
2. Hem-fir or hem-fir (north); Construction or No. 2 Common grade; NLGA, WCLIB, or WWPA.
3. Spruce-pine-fir (south) or spruce-pine-fir; Construction or No. 2 Common grade; NeLMA, NLGA, WCLIB, or WWPA.

D. For blocking and nailers used for attachment of other construction, select and cut lumber to eliminate knots and other defects that will interfere with attachment of other work.

E. For furring strips for installing plywood or hardboard paneling, select boards with no knots capable of producing bent-over nails and damage to paneling.

2.6 PLYWOOD BACKING PANELS

A. Equipment Backing Panels: DOC PS 1, Exterior, AC, in thickness indicated or, if not indicated, not less than 1/2-inch nominal thickness.

2.7 FASTENERS

A. General: Provide fasteners of size and type indicated that comply with requirements specified in this article for material and manufacture.

1. Where rough carpentry is exposed to weather, in ground contact, pressure-preservative treated, or in area of high relative humidity, provide fasteners with hot-dip zinc coating complying with ASTM A 153/A 153M or of Type 304 stainless steel.

B. Nails, Brads, and Staples: FS FF-N-105 ASTM F 1667.

C. Wood Screws: ASME B18.6.1.

D. Bolts: Steel bolts complying with ASTM A 307, Grade A; with ASTM A 563 hex nuts and, where indicated, flat washers.

2.8 METAL FRAMING ANCHORS

A. Basis-of-Design Product: Subject to compliance with requirements, provide product indicated on Drawings or comparable product by one of the following:

1. Cleveland Steel Specialty Co.
2. KC Metals Products, Inc.
3. Phoenix Metal Products, Inc.
4. Simpson Strong-Tie Co., Inc.
5. USP Structural Connectors.

B. Allowable Design Loads: Provide products with allowable design loads, as published by manufacturer, that meet or exceed those of basis-of-design products. Manufacturer's published values shall be determined from empirical data or by rational engineering analysis and demonstrated by comprehensive testing performed by a qualified independent testing agency.

C. Hot-Dip, Heavy-Galvanized Steel Sheet: ASTM A 653/A 653M; structural steel (SS), high-strength low-alloy steel Type A (HSLAS Type A), or high-strength low-alloy steel Type B (HSLAS Type B); G185 coating designation; and not less than 0.036 inch thick.

1. Use for interior locations unless otherwise indicated.
2. Use for wood-preservative-treated lumber and where indicated.

2.9 MISCELLANEOUS MATERIALS

A. Adhesives for Gluing to Concrete: Formulation complying with ASTM D 3498 that is approved for use indicated by adhesive manufacturer.

PART 3 - EXECUTION

3.1 INSTALLATION, GENERAL

A. Set rough carpentry to required levels and lines, with members plumb, true to line, cut, and fitted.

B. Fit rough carpentry to other construction; scribe and cope as needed for accurate fit. Locate furring, nailers, blocking, and similar supports to comply with requirements for attaching other construction.

C. Framing Standard: Comply with AF&PA's WCD 1, "Details for Conventional Wood Frame Construction," unless otherwise indicated.

D. Framing with Engineered Wood Products: Install engineered wood products to comply with manufacturer's written instructions.

E. Install plywood backing panels by fastening to studs; coordinate locations with utilities requiring backing panels. Install fire-retardant treated plywood backing panels with classification marking of testing agency exposed to view.

F. Metal Framing Anchors: Install metal framing anchors to comply with manufacturer's written instructions. Install fasteners through each fastener hole.

G. Do not splice structural members between supports unless otherwise indicated.

H. Provide blocking and framing as indicated and as required to support facing materials, fixtures, specialty items, and trim.

   1. Provide metal clips for fastening gypsum board or lath at corners and intersections where framing or blocking does not provide a surface for fastening edges of panels. Space clips not more than 16 inches o.c.

I. Sort and select lumber so that natural characteristics will not interfere with installation or with fastening other materials to lumber. Do not use materials with defects that interfere with function of member or pieces that are too small to use with minimum number of joints or optimum joint arrangement.

J. Comply with AWPA M4 for applying field treatment to cut surfaces of preservative-treated lumber.

   1. Use inorganic boron for items that are continuously protected from liquid water.
   2. Use copper naphthenate for items not continuously protected from liquid water.

K. Securely attach rough carpentry work to substrate by anchoring and fastening as indicated, complying with the following:

1. Table 2304.9.1, "Fastening Schedule," in ICC's International Building Code.

L. Use steel common nails unless otherwise indicated. Select fasteners of size that will not fully penetrate members where opposite side will be exposed to view or will receive finish materials. Make tight connections between members. Install fasteners without splitting wood. Drive nails snug but do not countersink nail heads unless otherwise indicated.

1. Use finishing nails unless otherwise indicated. Countersink nail heads and fill holes with wood filler.

3.2 WOOD FURRING INSTALLATION

A. Install level and plumb with closure strips at edges and openings. Shim with wood as required for tolerance of finish work.

B. Furring to Receive Plaster Lath: Install 1-by-2-inch nominal- size furring vertically at 16 inches o.c.

3.3 CEILING JOIST AND RAFTER FRAMING INSTALLATION

A. Provide special framing as indicated for roof framing repairs.

3.4 PROTECTION

A. Protect rough carpentry from weather. If, despite protection, rough carpentry becomes wet, apply EPA-registered borate treatment. Apply borate solution by spraying to comply with EPA-registered label.

END OF SECTION 061000

SECTION 061600 - SHEATHING

PART 1 - GENERAL

1.1 RELATED DOCUMENTS

A. Documents referred to the DC Government Bid Documents, which include the Solicitation Documents, Contract Sections, Contract Clauses, Special Contract Requirements and Standard Contract Provisions for Use With Specifications for District of Columbia Government Construction Projects (January 2007) are part hereof the same as if repeated herein.

1.2 SUMMARY

A. Section Includes:
   1. Subflooring and Flooring
   2. Underlayment.

B. Related Requirements:

   1. Section 096519 “Resilient Floor Tile” for floor finish.

1.3 ACTION SUBMITTALS

A. Product Data: For each type of process and factory-fabricated product. Indicate component materials and dimensions and include construction and application details.

   1. Include data for wood-preservative treatment from chemical treatment manufacturer and certification by treating plant that treated plywood complies with requirements. Indicate type of preservative used and net amount of preservative retained.
   2. Include data for fire-retardant treatment from chemical treatment manufacturer and certification by treating plant that treated plywood complies with requirements. Include physical properties of treated materials.
   3. For products receiving a waterborne treatment, include statement that moisture content of treated materials was reduced to levels specified before shipment to Project site.
   4. Include copies of warranties from chemical treatment manufacturers for each type of treatment.

1.4 SAMPLES

A. Subfloor and Finish Floor Boards: For each submit 12 inch long sample to verify size and quality for use in repairs

1.5 QUALITY ASSURANCE

A. Testing Agency Qualifications: For testing agency providing classification marking for fire-retardant-treated material, an inspection agency acceptable to authorities having jurisdiction that periodically performs inspections to verify that the material bearing the classification marking is representative of the material tested.

1.6 DELIVERY, STORAGE, AND HANDLING

A. Stack panels flat with spacers beneath and between each bundle to provide air circulation. Protect sheathing from weather by covering with waterproof sheeting, securely anchored. Provide for air circulation around stacks and under coverings.

PART 2 - PRODUCTS

2.1 PERFORMANCE REQUIREMENTS

A. Fire-Test-Response Characteristics: For assemblies with fire-resistance ratings, provide materials and construction identical to those of assemblies tested for fire resistance per ASTM E 119 by a testing and inspecting agency acceptable to authorities having jurisdiction.

1. Fire-Resistance Ratings: Indicated by design designations from UL's "Fire Resistance Directory."

2.2 WOOD PANEL PRODUCTS

A. Plywood: Either DOC PS 1 or DOC PS 2 unless otherwise indicated.

B. Oriented Strand Board: DOC PS 2.

C. Factory mark panels to indicate compliance with applicable standard.

2.3 PRESERVATIVE-TREATED PLYWOOD

A. Preservative Treatment by Pressure Process: Use Category UC4a for construction within one 2 foot of radiators.

1. Preservative Chemicals: Acceptable to authorities having jurisdiction and containing no arsenic or chromium.

B. Mark plywood with appropriate classification marking of an inspection agency acceptable to authorities having jurisdiction.

C. Application: Treat all plywood in contact with masonry or concrete and with one (1) foot of radiators.

2.4 SUBFLOORING AND UNDERLAYMENT

A. SUBFLOOR and FLOORING:
1. Repair Areas: Match depth, width, thickness, and quality of existing subflooring and wood floor board for repairs. Subfloor and finish floor boards salvaged from recent construction work at the shelter may be used for repairs.
2. Joist Repair Areas: Reinstall subfloor and finish floor boards removed to access joists. Match depth, width, thickness, and quality of existing subflooring and wood floor board for subfloor and finish floor boards that are too damaged for reuse.

B. Underlayment, General: Provide underlayment in nominal thicknesses indicated or, if not indicated, not less than 1/4 inch over smooth subfloors and not less than 3/8 inch over board or uneven subfloors.

C. Plywood Underlayment for Resilient Flooring: DOC PS 1, Exterior A-C with fully sanded face.

2.5 ROOF SHEATHING

A. Plywood Roof Sheathing: Exterior sheathing.

1. Nominal Thickness: As noted, but not less than 5/8 inch.

2.6 NEW BOARDS FOR WOOD FLOORING REPAIR

A. Solid-Wood Flooring for Repair Areas: Kiln dried to 6 to 9 percent maximum moisture content, tongue and groove and end matched, and with backs channeled.

1. Manufacturers: Subject to compliance with requirements, available manufacturers offering products that may be incorporated into the Work include, but are not limited to, the following:

a. Aacer Flooring, LLC.
b. Carlisle Wide Plank Floors.
c. EcoTimber.

d. International Hardwood Flooring, Inc.
e. Kentucky Wood Floors.
f. Miller and Company, Inc.
g. Oregon Lumber Company.
h. Sandy Pond Hardwoods, Inc.
i. WD Flooring, LLC.
j. Yesteryear Floorworks Company.

2. Species and Grade: Match existing species at a grade no lower than then the existing.
3. Cut: Vertical grain.
4. Thickness: 1 1/4 inch, as needed to match existing boards..
5. Face Width: As required to match surrounding existing boards
6. Lengths: Lengths required to infill repair areas with the staged joint at interface between new and existing floor boards.

2.7 FASTENERS

A. General: Provide fasteners of size and type indicated that comply with requirements specified in this article for material and manufacture.

1. Provide fasteners of Type 304 stainless steel.

B. Nails, Brads, and Staples: ASTM F 1667.

C. Power-Driven Fasteners: NES NER-272.

D. Wood Screws: ASME B18.6.1.

E. Fasteners for Solid Wood Floor: As recommended by manufacturer, but not less than that recommended in NWFA's "Installation Guidelines: Wood Flooring.".

2.8 ACCESSORY MATERIALS

A. Thresholds and Saddles: To match wood flooring. Tapered on each side.

B. Reducer Strips: To match wood flooring. 2 inches wide, tapered, and in thickness required to match height of flooring.

PART 3 - EXECUTION

3.1 INSTALLATION, GENERAL

A. Do not use materials with defects that impair quality of sheathing or pieces that are too small to use with minimum number of joints or optimum joint arrangement. Arrange joints so that pieces do not span between fewer than three support members.

B. Cut panels at penetrations, edges, and other obstructions of work; fit tightly against abutting construction unless otherwise indicated.

C. Securely attach to substrate by fastening as indicated, complying with the following:

1. NES NER-272 for power-driven fasteners.
2. Table 2304.9.1, "Fastening Schedule," in ICC's "International Building Code."

D. Repair deteriorated subflooring at radiators with floor boards to match the depth and width of existing boards. Stagger butt joint ends where existing and repair subfloor boards meet.

E. Use screws to fasten subfloor and underlayment to wood joints and floors, unless otherwise indicated. Select fasteners of size that will not fully penetrate members where opposite side will be exposed to view or will receive finish materials. Make tight connections. Install fasteners without splitting wood.

3.2 WOOD STRUCTURAL PANEL INSTALLATION

A. General: Comply with applicable recommendations in APA Form No. E30, "Engineered Wood Construction Guide," for types of structural-use panels and applications indicated.

B. Fastening Methods: Fasten panels as indicated below:

1. Underlayment:

a. Screw to subflooring.
b. Space panels 1/32 inch apart at edges and ends.

END OF SECTION 061600

SECTION 072100 - THERMAL INSULATION

PART 1 - GENERAL

1.1 RELATED DOCUMENTS

A. Documents referred to the DC Government Bid Documents, which include the Solicitation Documents, Contract Sections, Contract Clauses, Special Contract Requirements and Standard Contract Provisions for Use With Specifications for District of Columbia Government Construction Projects (January 2007) are part hereof the same as if repeated herein.

1.2 SUMMARY

A. Section Includes:
   1. Glass-fiber blanket insulation.
   2. Netting to support insulation.

1.3 SUBMITTALS

A. Product Data: For each type of product indicated.

1.4 QUALITY ASSURANCE

A. Surface-Burning Characteristics: As determined by testing identical products according to ASTM E 84 by a qualified testing agency. Identify products with appropriate markings of applicable testing agency.

1.5 DELIVERY, STORAGE, AND HANDLING

A. Protect insulation materials from physical damage and from deterioration due to moisture, soiling, and other sources. Store inside and in a dry location. Comply with manufacturer's written instructions for handling, storing, and protecting during installation.

PART 2 - PRODUCTS

2.1 GLASS-FIBER BLANKET INSULATION

A. Manufacturers: Subject to compliance with requirements, available manufacturers offering products that may be incorporated into the Work include, but are not limited to, the following:

1. CertainTeed Corporation.
2. Guardian Building Products, Inc.
3. Johns Manville.
4. Knauf Insulation.
5. Owens Corning.

B. Unfaced, Glass-Fiber Blanket Insulation: ASTM C 665, Type I; with maximum flame-spread and smoke-developed indexes of 25 and 50, respectively, per ASTM E 84; passing ASTM E 136 for combustion characteristics.

2.2 NETTING MATERIALS

A. Manufacturers: Subject to compliance with requirements, manufacturers offering products that may be incorporated into the Work include, but are not limited to, the following for the netting:

a. Bird Netting and Accessories: Bird B Gone Inc.
b. D&S Specialty Products, Inc.
c. Bird Barrier America, Inc.

B. Netting Material: Ultra-violet stabilized knotted polyethylene net. Flame resistant, Rot-proof, non-conducting and stable in sub zero temperatures. Comprised of 6 strands twisted together to produce a strong twine.

1. Breaking Strength: 48 pounds per strand
2. Burst Strength: ISO 1806 Mesh Test Protocol 35.32lbf.
3. Mesh Size: ¾”
4. Color: Black

C. Netting Mount System:

1. Provide stainless-steel fasteners and hardware.
2. Intermediate Anchors: screw eye, S-hook or J-bracket, provide as needed to fit to rafter and support insulation firmly.
3. Cable: 5/64” (2mm) Diameter, Stainless steel. Use to intermiediate support every 8 foot lenth of netting parallel to rafters and at netting material edges.

D. Miscellaneous Hardware: Turnbuckles, bars, brackets, clips, screws and all hardware to be stainless steel.

PART 3 - EXECUTION

3.1 PREPARATION

A. Clean substrates of substances that are harmful to insulation, including removing projections capable of ripping insulation or that interfere with insulation attachment.

3.2 INSTALLATION, GENERAL

A. Comply with insulation manufacturer's written instructions applicable to products and applications indicated.

B. Install insulation that is undamaged, dry, and unsoiled and that has not been left exposed to ice, rain, or snow at any time.

C. Extend insulation to envelop entire area to be insulated. Cut and fit tightly around obstructions and fill voids with insulation.

D. Insulate under walkway planks. Lift and reattach, if necessary.

E. Provide sizes to fit applications indicated and selected from manufacturer's standard thicknesses, widths, and lengths. Apply single layer of insulation units to produce thickness indicated unless multiple layers are otherwise shown or required to make up total thickness.

3.3 INSTALLATION OF INSULATION FOR FRAMED CONSTRUCTION

A. Apply insulation units to substrates by method indicated, complying with manufacturer's written instructions. If no specific method is indicated, use mechanical anchorage to provide permanent placement and support of units.

B. Glass-Fiber Blanket Insulation: Install in cavities formed by framing members according to the following requirements:

1. Use insulation widths and lengths that fill the cavities formed by framing members. If more than one length or width is required to fill the cavities, provide lengths and widths that will produce a snug fit between ends and sides.
2. Place insulation in cavities formed by framing members to produce a friction fit between edges of insulation and adjoining framing members.
3. For wood-framed construction, install blankets according to ASTM C 1320.

C. Provide netting to retain existing and new insulation in place. Attach netting to roof rafters.

D. Miscellaneous Voids: Install insulation in miscellaneous voids and cavity spaces where required to prevent gaps in insulation.

3.4 PROTECTION

A. Protect installed insulation from damage due to harmful weather exposures, physical abuse, and other causes. Provide temporary coverings or enclosures where insulation is subject to abuse and cannot be concealed and protected by permanent construction immediately after installation.

END OF SECTION 072100

SECTION 076101 - SHEET METAL ROOFING

PART 1 - GENERAL

1.1 RELATED DOCUMENTS

A. Documents referred to the DC Government Bid Documents, which include the Solicitation Documents, Contract Sections, Contract Clauses, Special Contract Requirements and Standard Contract Provisions for Use With Specifications for District of Columbia Government Construction Projects (January 2007) are part hereof the same as if repeated herein.

1.2 SUMMARY

A. Section Includes:

1. Flat-seam metal roofing, custom fabricated.

1.3 PERFORMANCE REQUIREMENTS

A. General Performance: Sheet metal roofing system including, but not limited to, metal roof panels, cleats, clips, anchors and fasteners, sheet metal flashing integral with sheet metal roofing, fascia panels, trim, underlayment, and accessories shall comply with requirements indicated without failure due to defective manufacture, fabrication, installation, or other defects in construction. Sheet metal roofing shall remain watertight.

B. Thermal Movements: Provide sheet metal roofing that allows for thermal movements from ambient and surface temperature changes. Base calculations on surface temperatures of materials due to both solar heat gain and nighttime-sky heat loss.

1. Temperature Change (Range): 120 deg F, ambient; 180 deg F, material surfaces.

1.4 ACTION SUBMITTALS

A. Product Data: For each type of product indicated. Include construction details, material descriptions, dimensions of individual components and profiles, and finishes for each manufactured product and accessory.

B. Shop Drawings: Show fabrication and installation layouts of sheet metal roofing, including plans, elevations, expansion joint locations, and keyed details. Distinguish between shop- and field-assembled work. Include the following:

1. Details for forming sheet metal roofing, including seams and dimensions.
2. Details for joining and securing sheet metal roofing, including layout of fasteners, cleats, clips, and other attachments. Include pattern of seams.
3. Details of termination points and assemblies, including fixed points.
4. Details of expansion joints, including showing direction of expansion and contraction.
5. Details of edge conditions, including eaves, and counterflashings.
6. Details of special conditions.
7. Details of connections to adjoining work.
8. Detail the following accessory items, at a scale of not less than 1-1/2 inches per 12 inches:

    a. Flashing and trim.
    b. Parapet Coping
    c. Gutters and downspouts as they relate to adjacent sheet metal roofing.

C. Samples for Verification: For each type of exposed finish required, prepared on Samples of size indicated below:

1. Sheet Metal Roofing: 12 inches long by actual width of unit, including finished seam and in required profile. Include fasteners, cleats and other attachments.
2. Trim and Metal Closures: 12 inches long and in required profile. Include fasteners and other exposed accessories.

1.5 INFORMATIONAL SUBMITTALS

A. Qualification Data: For qualified Installer.

B. Product Test Reports: Based on evaluation of comprehensive tests performed by a qualified testing agency, for each product.

C. Warranties: Sample of special warranties.

1.6 QUALITY ASSURANCE

A. Custom-Fabricated Sheet Metal Roofing Fabricator Qualifications: Engage an experienced roofing/sheet metal installer to perform work of this Section. Firm shall have completed work on three projects within the last ten years similar in material, design, and extent to that indicated for this Project with a record of successful in-service performance. Shop employs workers skilled in the process and operations indicated for the job. Experience with prefabricated metal pan systems installations, on-site roll formed sheet metal roof and forming duct work gypsum alone are insufficient experience for executing the work of this Project.

1. Lead Roofer (Supervisor): maintain experienced full-time supervisors on Project site during times that roofing work in progress. Lead Roofer (Supervisor) shall have performed work successfully on at least three projects on custom (hand formed) flat-seam sheet metal roofs of at least the size and type to this project. Supervisors shall not be changed during project except for causes beyond the control of the roofing/sheet metal installer.

2. Sheet Metal Roofers: Employ experienced sheet metal roofer(s) for the work and shall maintain them for the project during times that roofing work is in progress. Roofers shall not be changed during Project except for causes beyond the control of roofing/sheet metal installer. Roofers shall have performed hand formed sheet metal roofing work successfully on at least 2 projects.

3. Roofing Crew Worker Qualifications: Persons who are experienced and specialize in restoration work of types they will be performing.

B. Sheet Metal Roofing Standard: Comply with SMACNA's "Architectural Sheet Metal Manual" unless more stringent requirements are specified or shown on Drawings.

C. Copper Roofing Standard: Comply with CDA's "Copper in Architecture Handbook." Conform to dimensions and profiles shown unless more stringent requirements are indicated.

D. Mockups: Build mockups to verify selections made under sample submittals and to demonstrate aesthetic effects and set quality standards for fabrication and installation.

1. Build mockups for typical roof area only, including accessories.

a. Size: 12 feet square. Include attachments, underlayment, eave and wall flashing.

2. Approval of mockups does not constitute approval of deviations from the Contract Documents contained in mockups unless COTR specifically approves such deviations in writing.
3. Approved mockups may become part of the completed Work if undisturbed at time of Substantial Completion.

E. Preliminary Roofing Conference: Before starting roof sheathing construction, conduct conference at Project site. Comply with requirements for preinstallation conferences in Section 013100 "Project Management and Coordination."

1. Review methods and procedures related to roof sheathing construction and sheet metal roofing including, but not limited to, items listed for the Preinstallation Conference.

F. Preinstallation Conference: Conduct conference at Project site.

1. Meet with COTR, sheet metal roofing Installer and trades whose work interfaces with or affects sheet metal roofing including installers.
2. Review and finalize construction schedule and verify availability of materials, Installer's personnel, equipment, and facilities needed to make progress and avoid delays.
3. Review methods and procedures related to sheet metal roofing installation.
4. Examine sheathing conditions for compliance with requirements, including flatness and attachment to structural members.
5. Review flashings, special roofing details, roof drainage, roof penetrations, equipment curbs, and condition of other construction that will affect sheet metal roofing.
6. Review temporary protection requirements for sheet metal roofing during and after roofing installation.
7. Review roof observation and repair procedures after sheet metal roofing installation.
8. Document proceedings, including corrective measures and actions required, and furnish copy of record to each participant.

1.7 DELIVERY, STORAGE, AND HANDLING

A. Do not store sheet metal roofing materials in contact with other materials that might cause staining, denting, or other surface damage. Store sheet metal roofing materials away from uncured concrete and masonry.

B. Protect strippable protective covering on sheet metal roofing from exposure to sunlight and high humidity, except to the extent necessary for the period of sheet metal roofing installation.

1.8 COORDINATION

A. Coordinate sheet metal roofing with rain drainage work, flashing, trim, and construction of sheathing, parapets, walls, and other adjoining work to provide a leakproof, secure, and noncorrosive installation.

1.9 WARRANTY

A. Special Warranty: Warranty form at the end of this Section in which Installer agrees to repair or replace components of sheet metal roofing that fail in materials or workmanship within specified warranty period.

1. Failures include, but are not limited to, the following:

a. Structural failures, including but not limited to rupturing, cracking, or puncturing.

b. Wrinkling or buckling.
c. Loose parts.
d. Failure to remain weathertight, including uncontrolled water leakage.
e. Deterioration of metals, metal finishes, and other materials beyond normal weathering, including non-uniformity of color or finish.
f. Galvanic action between sheet metal roofing and dissimilar materials.

PART 2 - PRODUCTS

2.1 ROOFING SHEET METALS

A. General: Protect mechanical and other finishes on exposed surfaces from damage by applying a strippable, temporary protective film before shipping.

B. Zinc-Tin Alloy-Coated Copper Sheet: ASTM B 370, cold-rolled copper sheet, H00 temper, coated on both sides with a zinc-tin alloy (50 percent zinc, 50 percent tin).

1. Products: Subject to compliance with requirements, available products that may be incorporated into the Work include, but are not limited to, the following:

   a. Revere Copper Products, Inc.; FreedomGray.

2. Weight (Thickness): 16-oz./sq. ft. uncoated weight, with 0.787-mil coating thickness applied to each side.

2.2 UNDERLAYMENT MATERIALS

A. Felts: ASTM D 226, Type II (No. 30), asphalt-saturated organic felts.

B. Self-Adhering, High-Temperature Sheet: Minimum 30 to 40 mils thick, consisting of slip-resisting polyethylene-film top surface laminated to layer of butyl or SBS-modified asphalt adhesive, with release-paper backing; cold applied. Provide primer when recommended by underlayment manufacturer.

1. Thermal Stability: ASTM D 1970; stable after testing at 240 deg F.
2. Low-Temperature Flexibility: ASTM D 1970; passes after testing at minus 20 deg F.
3. Products: Subject to compliance with requirements, available products that may be incorporated into the Work include, but are not limited to, the following:

   a. Carlisle Coatings & Waterproofing Inc.; CCW WIP 300HT.
   b. Grace Construction Products, a unit of W. R. Grace & Co.; Ultra.
   c. Henry Company; Blueskin PE200 HT.
   d. Metal-Fab Manufacturing, LLC; MetShield.

e. Owens Corning; WeatherLock Metal High-Temperature Underlayment.

C. Slip Sheet: Building paper, 3-lb/100 sq. ft. minimum, rosin sized.

2.3 MISCELLANEOUS MATERIALS

A. General: Provide materials and types of fasteners, solder, welding rods, protective coatings, separators, sealants, and other miscellaneous items as required for a complete roofing system and as recommended by fabricator for sheet metal roofing.

B. Fasteners: Wood screws, annular-threaded nails, self-tapping screws, bolts, and other suitable fasteners designed to withstand design loads.
1. Fasteners for Zinc-Tin Alloy-Coated Copper Sheet: Copper, hardware bronze, or Series 300 stainless steel.

C. Solder:
1. For Zinc-Tin Alloy-Coated Copper: ASTM B 32, 100 percent tin.

2.4 ACCESSORIES

A. Sheet Metal Accessories: Provide components required for a complete sheet metal roofing assembly including trim, copings, fasciae, corner units, flashings, and similar items. Match material and finish of sheet metal roofing unless otherwise indicated.
1. Cleats: For mechanically seaming into joints and formed from the following materials:
a. Zinc-Tin Alloy-Coated Copper Roofing: 16-oz./sq. ft. copper sheet.
2. Flashing and Trim: Formed from same material and thickness as sheet metal roofing.

2.5 FABRICATION

A. General: Custom fabricate sheet metal roofing to comply with details shown and recommendations in SMACNA's "Architectural Sheet Metal Manual" that apply to the design, dimensions (panel width and seam height), geometry, metal thickness, and other characteristics of installation indicated. Fabricate sheet metal roofing and accessories at the shop to greatest extent possible.

1. Flat-Seam Roofing: Form flat-seam panels from metal sheets 20 by 28 inches with 1/2-inch notched and folded edges.

B. Fabrication Tolerances: Fabricate sheet metal roofing that is capable of installation to a tolerance of 1/4 inch in 20 feet on slope and location lines as indicated and within 1/8-inch offset of adjoining faces and of alignment of matching profiles.

C. Form exposed sheet metal work to fit substrates without excessive oil canning, buckling, and tool marks; true to line and levels indicated; and with exposed edges folded back to form hems.

1. Lay out sheet metal roofing so transverse seams, if required, are made in direction of flow with higher panels overlapping lower panels.
2. Offset transverse seams from each other 12 inches minimum.
3. Fold and cleat eaves and transverse seams in the shop.
4. Form and fabricate sheets, seams, strips, edge treatments, integral flashings, and other components of metal roofing to profiles, patterns, and drainage arrangements shown on Drawings and as required for leakproof construction.

D. Expansion Provisions: Fabricate sheet metal roofing to allow for expansion in running work sufficient to prevent leakage, damage, and deterioration of the Work.

E. Metal Protection: Where dissimilar metals will contact each other, protect against galvanic action by painting contact surfaces with bituminous coating, by applying self-adhering sheet underlayment to each contact surface, or by other permanent separation as recommended by fabricator of sheet metal roofing or manufacturers of the metals in contact.

F. Sheet Metal Accessories: Custom fabricate flashings and trim to comply with recommendations in SMACNA's "Architectural Sheet Metal Manual" that apply to design, dimensions, metal, and other characteristics of item indicated. Obtain field measurements for accurate fit before shop fabrication.

1. Form exposed sheet metal accessories without excessive oil canning, buckling, and tool marks and true to line and levels indicated, with exposed edges folded back to form hems.
2. Seams: Fabricate nonmoving seams with flat-lock seams. Tin edges to be seamed, form seams, and solder.
3. Conceal fasteners and expansion provisions where possible. Exposed fasteners are not allowed on faces of accessories exposed to view.
4. Fabricate cleats and attachment devices of sizes as recommended by SMACNA's "Architectural Sheet Metal Manual" for application, but not less than thickness of metal being secured.

PART 3 - EXECUTION

3.1 EXAMINATION

A. Examine substrates, areas, and conditions, with Installer present, for compliance with requirements for installation tolerances, substrate, and other conditions affecting performance of the Work.

1. Examine solid roof sheathing to verify that sheathing joints are supported by framing or blocking, that tops of fasteners are flush with surface, and that installation is within flatness tolerances required for finished roofing installation.
2. Verify that substrate is sound, dry, smooth, clean, sloped for drainage, and completely anchored, and that provision has been made for drainage, flashings, and penetrations through sheet metal roofing.

B. Proceed with installation only after unsatisfactory conditions have been corrected.

3.2 PREPARATION

A. Zinc-Tin Alloy-Coated Steel Roofing: For roofing with 3:12 slopes or less, paint underside of shop-coated, zinc-tin alloy-coated steel, before installation, with zinc-tin alloy-coated steel primer, applied at a dry film thickness of not less than 2.5 mils. Comply with manufacturer's written instructions. This is in addition to the shop coating.

3.3 UNDERLAYMENT INSTALLATION

A. Felt Underlayment: Install felt underlayment on roof sheathing under sheet metal roofing. Use adhesive for temporary anchorage to minimize use of mechanical fasteners under sheet metal roofing. Apply in shingle fashion to shed water, with lapped joints of not less than 2 inches.

1. Apply from eave to ridge.

B. Self-Adhering Sheet Underlayment: Install self-adhering sheet underlayment, wrinkle free, on roof sheathing under sheet metal roofing. Apply primer if required by underlayment manufacturer. Comply with temperature restrictions of underlayment manufacturer for installation; use primer rather than nails for installing underlayment at low temperatures. Apply at eave in shingle fashion to shed water, with end laps of not less than 6 inches staggered 24 inches between courses. Overlap side edges not less than 3-1/2 inches. Roll laps with roller. Cover underlayment within 14 days.

1. Roof perimeter for a distance up from eaves of 12 inches beyond interior wall line.

C. Install flashings to cover underlayment to comply with requirements in Section 076200 "Sheet Metal Flashing and Trim."

D. Apply slip sheet before installing sheet metal roofing.

3.4 INSTALLATION, GENERAL

A. General: Anchor sheet metal roofing and other components of the Work securely in place, with provisions for thermal and structural movement. Install fasteners, solder, welding rods, protective coatings, separators, sealants, and other miscellaneous items as required for a complete roofing system and as recommended by fabricator for sheet metal roofing.

1. Field cutting of sheet metal roofing by torch is not permitted.
2. Provide metal closures at peaks rake walls and eaves
3. Flash and seal sheet metal roofing with closure strips at eaves, rakes, and perimeter of all openings. Fasten with self-tapping screws.
4. Locate and space fastenings in uniform vertical and horizontal alignment. Predrill panels for fasteners.
5. Locate roofing splices over, but not attached to, structural supports. Stagger roofing splices and end laps to avoid a four-panel lap splice condition. Install backing plates at roofing splices.
6. Lap metal flashing over sheet metal roofing to allow moisture to run over and off the material.

B. Fasteners: Use fasteners of sizes that will penetrate wood sheathing not less than 1-1/4 inches for nails and not less than 3/4 inch for wood screws.

C. Metal Protection: Where dissimilar metals will contact each other or corrosive substrates, protect against galvanic action by painting contact surfaces with bituminous coating, by applying self-adhering sheet underlayment to each contact surface, or by other permanent separation as recommended by SMACNA.

D. Conceal fasteners and expansion provisions where possible in exposed work and locate to minimize possibility of leakage. Cover and seal fasteners and anchors as required for a tight installation.

3.5 CUSTOM-FABRICATED SHEET METAL ROOFING INSTALLATION

A. Fabricate and install work with lines and corners of exposed units true and accurate. Form exposed faces flat and free of buckles, excessive waves, and avoidable tool marks, considering temper and reflectivity of metal. Provide uniform, neat seams with minimum exposure of solder, welds, and sealant. Fold back sheet metal to form a hem on concealed side of exposed edges unless otherwise indicated.

1. Install cleats to hold sheet metal panels in position. Attach each cleat with two fasteners to prevent rotation.
2. Fasten cleats not more than 12 inches o.c. Bend tabs over fastener head.
3. Provide expansion-type cleats and clips for roof panels that exceed 30 feet in length.

B. Use cleats at transverse seams.

C. Soldered Joints: Clean surfaces to be soldered, removing oils and foreign matter. Pre-tin edges of sheets to be soldered to a width of 1-1/2 inches, except reduce pre-tinning where pre-tinned surface would show in completed Work.
   1. Do not pre-tin zinc-tin alloy-coated copper.
   2. Do not use torches for soldering. Heat surfaces to receive solder and flow solder into joint. Fill joint completely. Completely remove flux and spatter from exposed surfaces.
   3. Copper Roofing: Tin edges of uncoated copper sheets, using solder for copper.

D. Flat-Seam Roofing: Attach flat-seam metal panels to substrate with cleats, starting at eave and working upward toward ridge. After panels are in place, mallet seams and solder.

   1. Attach roofing panels with cleats spaced not more than 24 inches o.c. Lock and solder panels to base flashing.
   2. Attach edge flashing to face of roof edge with continuous cleat fastened to roof substrate at 12 inches o.c. Lock panels to edge flashing and solder.

3.6 ACCESSORY INSTALLATION

A. General: Install accessories with positive anchorage to building and weathertight mounting and provide for thermal expansion. Coordinate installation with flashings and other components.

   1. Install components required for a complete sheet metal roofing assembly.

B. Flashing and Trim: Comply with performance requirements, manufacturer's written installation instructions, and SMACNA's "Architectural Sheet Metal Manual." Provide concealed fasteners where possible, and set units true to line and level as indicated. Install work with laps, joints, and seams that will be permanently watertight and weather resistant.

   1. Install flashing and trim as required to seal against weather and to provide finished appearance. Locations include, but are not limited to, eaves, rakes, corners, bases, framed openings, ridges, fasciae, and fillers.
   2. Install continuous strip of self-adhering underlayment at edge of continuous flashing overlapping self-adhering underlayment, where "continuous seal strip" is indicated in SMACNA's "Architectural Sheet Metal Manual," and where indicated on Drawings.
   3. Install exposed flashing and trim without excessive oil canning, buckling, and tool marks and true to line and levels indicated, with exposed edges folded back to form hems. Install sheet metal flashing and trim to fit substrates and to result in waterproof and weather-resistant performance.

4. Expansion Provisions: Provide for thermal expansion of exposed flashing and trim. Space movement joints at a maximum of 10 feet with no joints allowed within 24 inches of corner or intersection. Where lapped expansion provisions cannot be used or would not be sufficiently weather resistant and waterproof, form expansion joints of intermeshing hooked flanges, not less than 1 inch deep, and filled with butyl sealant concealed within joints.

3.7 ERECTION TOLERANCES

A. Installation Tolerances: Shim and align sheet metal roofing within installed tolerance of 1/4 inch in 20 feet on slope and location lines as indicated and within 1/8-inch offset of adjoining faces and of alignment of matching profiles.

3.8 CLEANING AND PROTECTION

A. Clean exposed metal surfaces of substances that interfere with uniform oxidation and weathering.

B. Clean and neutralize flux materials. Clean off excess solder.

C. Clean off excess sealants.

D. Remove temporary protective coverings and strippable films as sheet metal roofing is installed unless otherwise indicated in manufacturer's written installation instructions. On completion of sheet metal roofing installation, clean finished surfaces as recommended by sheet metal roofing manufacturer. Maintain sheet metal roofing in a clean condition during construction.

E. Replace sheet metal roofing components that have been damaged or have deteriorated beyond successful repair by finish touchup or similar minor repair procedures.

END OF SECTION 076101

SECTION 081100 - STEEL DOORS AND FRAMES

PART 1 - GENERAL

1.1 RELATED DOCUMENTS

A. Documents referred to the DC Government Bid Documents, which include the Solicitation Documents, Contract Sections, Contract Clauses, Special Contract Requirements and Standard Contract Provisions for Use With Specifications for District of Columbia Government Construction Projects (January 2007) are part hereof the same as if repeated herein.

1.2 SUMMARY

A. Section Includes:

1. Standard hollow metal doors and frames.

B. Related Sections
1. Division 8 Section "Door Hardware" for door hardware for hollow metal doors.
2. Division 9 Sections "Painting" and for field painting hollow metal doors and frames.

1.3 DEFINITIONS

A. Minimum Thickness: Minimum thickness of base metal without coatings.

B. Standard Hollow Metal Work: Hollow metal work fabricated according to ANSI/SDI A250.8.

1.4 SUBMITTALS

A. Product Data: For each type of product indicated. Include construction details, material descriptions, core descriptions, fire-resistance rating, and finishes.

B. Samples for Initial Selection: For units with factory-applied color finishes.

C. Samples for Verification:

1. For each type of exposed finish required, prepared on Samples of not less than 3 by 5 inches.

2. For the following items, prepared on Samples about 12 by 12 inches to demonstrate compliance with requirements for quality of materials and construction:

   a. Doors: Show vertical-edge, top, and bottom construction; core construction; and hinge and other applied hardware reinforcement. Include separate section showing glazing if applicable.
   b. Frames: Show profile, corner joint, floor and wall anchors, and silencers. Include separate section showing fixed hollow metal panels and glazing if applicable.

D. Other Action Submittals:

1. Schedule: Provide a schedule of hollow metal work prepared by or under the supervision of supplier, using same reference numbers for details and openings as those on Drawings. Coordinate with door hardware schedule.

1.5 QUALITY ASSURANCE

A. Source Limitations: Obtain hollow metal work from single source from single manufacturer.

B. Fire-Rated Door Assemblies: Assemblies complying with NFPA 80 that are listed and labeled by a qualified testing agency, for fire-protection ratings indicated, based on testing at positive pressure or as close to neutral pressure as possible according to NFPA 252.

1. Temperature-Rise Limit: At vertical exit enclosures and exit passageways, provide doors that have a maximum transmitted temperature end point of not more than 450 deg F above ambient after 30 minutes of standard fire-test exposure.

1.6 DELIVERY, STORAGE, AND HANDLING

A. Deliver hollow metal work palletized, wrapped, or crated to provide protection during transit and Project-site storage. Do not use nonvented plastic.

1. Provide additional protection to prevent damage to finish of factory-finished units.

B. Deliver welded frames with two removable spreader bars across bottom of frames, tack welded to jambs and mullions.

C. Store hollow metal work under cover at Project site. Place in stacks of five units maximum in a vertical position with heads up, spaced by blocking, on minimum 4-inch-high wood blocking. Do not store in a manner that traps excess humidity.

1. Provide minimum 1/4-inch space between each stacked door to permit air circulation.

1.7 PROJECT CONDITIONS

A. Field Measurements: Verify actual dimensions of openings by field measurements before fabrication.

1.8 COORDINATION

A. Coordinate installation of anchorages for hollow metal frames. Furnish setting drawings, templates, and directions for installing anchorages, including sleeves, concrete inserts, anchor bolts, and items with integral anchors. Deliver such items to Project site in time for installation.

PART 2 - PRODUCTS

2.1 MANUFACTURERS

A. Manufacturers: Subject to compliance with requirements, available manufacturers offering products that may be incorporated into the Work include, but are not limited to, the following:

1. Amweld Building Products, LLC.
2. Benchmark; a division of Therma-Tru Corporation.
3. Ceco Door Products; an Assa Abloy Group company.
4. Curries Company; an Assa Abloy Group company.
5. Deansteel Manufacturing Company, Inc.
6. Firedoor Corporation.
7. Fleming Door Products Ltd.; an Assa Abloy Group company.
8. Habersham Metal Products Company.
9. Karpen Steel Custom Doors & Frames.
10. Kewanee Corporation (The).
11. Mesker Door Inc.
12. Pioneer Industries, Inc.
13. Security Metal Products Corp.
14. Steelcraft; an Ingersoll-Rand company.
15. Windsor Republic Doors.

2.2 MATERIALS

A. Cold-Rolled Steel Sheet: ASTM A 1008/A 1008M, Commercial Steel (CS), Type B; suitable for exposed applications.

B. Hot-Rolled Steel Sheet: ASTM A 1011/A 1011M, Commercial Steel (CS), Type B; free of scale, pitting, or surface defects; pickled and oiled.

C. Metallic-Coated Steel Sheet: ASTM A 653/A 653M, Commercial Steel (CS), Type B; with minimum G60 or A60 metallic coating.

D. Frame Anchors: ASTM A 591/A 591M, Commercial Steel (CS), 40Z coating designation; mill phosphatized.

1. For anchors built into exterior walls, steel sheet complying with ASTM A 1008/A 1008M or ASTM A 1011/A 1011M, hot-dip galvanized according to ASTM A 153/A 153M, Class B.

E. Inserts, Bolts, and Fasteners: Hot-dip galvanized according to ASTM A 153/A 153M.

F. Powder-Actuated Fasteners in Concrete: Fastener system of type suitable for application indicated, fabricated from corrosion-resistant materials, with clips or other accessory devices for attaching hollow metal frames of type indicated.

G. Grout: ASTM C 476, except with a maximum slump of 4 inches, as measured according to ASTM C 143/C 143M.

H. Mineral-Fiber Insulation: ASTM C 665, Type I (blankets without membrane facing); consisting of fibers manufactured from slag or rock wool with 6- to 12-lb/cu. ft. density; with maximum flame-spread and smoke-development indexes of 25 and 50, respectively; passing ASTM E 136 for combustion characteristics.

2.3 STANDARD HOLLOW METAL DOORS

A. General: Provide doors of design indicated, not less than thickness indicated; fabricated with smooth surfaces, without visible joints or seams on exposed faces unless otherwise indicated. Comply with ANSI/SDI A250.8.

1. Design: Flush panel.
2. Core Construction: Manufacturer's standard kraft-paper honeycomb, polystyrene, polyurethane, polyisocyanurate, mineral-board, or vertical steel-stiffener core.

a. Fire Door Core: As required to provide fire-protection and temperature-rise ratings indicated.

b. Thermal-Rated (Insulated) Doors: Where indicated, provide doors fabricated with thermal-resistance value (R-value) of not less than 4.0 deg F x h x sq. ft./Btu when tested according to ASTM C 1363.

1) Locations: Exterior.

3. Vertical Edges for Single-Acting Doors: Square edge.

a. Beveled Edge: 1/8 inch in 2 inches.

4. Top and Bottom Edges: Closed with flush or inverted 0.042-inch- thick, end closures or channels of same material as face sheets.
5. Tolerances: Comply with SDI 117, "Manufacturing Tolerances for Standard Steel Doors and Frames."

B. Interior Doors unless otherwise indicated: Face sheets fabricated from cold-rolled steel sheet. Provide doors complying with requirements indicated below by referencing ANSI/SDI A250.8 for level and model and ANSI/SDI A250.4 for physical performance level:

1. Level 2 and Physical Performance Level B (Heavy Duty), Model 1 (Full Flush).

C. Hardware Reinforcement: Fabricate according to ANSI/SDI A250.6 with reinforcing plates from same material as door face sheets.

D. Fabricate concealed stiffeners and hardware reinforcement from either cold- or hot-rolled steel sheet.

2.4 INTERIOR HOLLOW METAL FRAMES

A. General: Comply with ANSI/SDI A250.8 and with details indicated for type and profile.

B. Interior Frames: Fabricated from cold-rolled steel sheet.

1. Fabricate frames with mitered or coped corners.
2. Fabricate frames as face welded unless otherwise indicated.
3. Fabricate knocked-down, drywall slip-on frames for in-place gypsum board partitions.
4. Frames for Level 2 Steel Doors: 0.053-inch- thick steel sheet.

C. Hardware Reinforcement: Fabricate according to ANSI/SDI A250.6 with reinforcement plates from same material as frames.

2.5 EXTERIOR HOLLOW METAL FRAMES

A. Commercial Frames: NAAMM-HMMA 861 for Door 018A

1. Physical Performance: Level A according to SDI A250.4.
2. Materials: Metallic-coated steel sheet, minimum thickness of 0.067 inch, with minimum G60A60 coating.
3. Construction: Full profile welded.
4. Exposed Finish: Prime.

2.6 FRAME ANCHORS

A. Jamb Anchors:

1. Masonry Type: Adjustable strap-and-stirrup or T-shaped anchors to suit frame size, not less than 0.042 inch thick, with corrugated or perforated straps not less than 2 inches wide by 10 inches long; or wire anchors not less than 0.177 inch thick.
2. Stud-Wall Type: Designed to engage stud, welded to back of frames; not less than 0.042 inch thick.
3. Compression Type for Drywall Slip-on Frames: Adjustable compression anchors.
4. Postinstalled Expansion Type for In-Place Concrete or Masonry: Minimum 3/8-inch- diameter bolts with expansion shields or inserts. Provide pipe spacer from frame to wall, with throat reinforcement plate, welded to frame at each anchor location.

B. Floor Anchors: Formed from same material as frames, not less than 0.042 inch thick, and as follows:

1. Monolithic Concrete Slabs: Clip-type anchors, with two holes to receive fasteners.

2.7 ACCESSORIES

A. Grout Guards: Formed from same material as frames, not less than 0.016 inch thick.

2.8 FABRICATION

A. Fabricate hollow metal work to be rigid and free of defects, warp, or buckle. Accurately form metal to required sizes and profiles, with minimum radius for thickness of metal. Where practical, fit and assemble units in manufacturer's plant. To ensure proper assembly at Project site, clearly identify work that cannot be permanently factory assembled before shipment.

B. Tolerances: Fabricate hollow metal work to tolerances indicated in SDI 117.

C. Hollow Metal Frames: Where frames are fabricated in sections due to shipping or handling limitations, provide alignment plates or angles at each joint, fabricated of same thickness metal as frames.

1. Welded Frames: Weld flush face joints continuously; grind, fill, dress, and make smooth, flush, and invisible.
2. Provide countersunk, flat- or oval-head exposed screws and bolts for exposed fasteners unless otherwise indicated.
3. Grout Guards: Weld guards to frame at back of hardware mortises in frames to be grouted.
4. Floor Anchors: Weld anchors to bottom of jambs and mullions with at least four spot welds per anchor.
5. Jamb Anchors: Provide number and spacing of anchors as follows:

    a. Stud-Wall Type: Locate anchors not more than 18 inches from top and bottom of frame. Space anchors not more than 32 inches o.c. and as follows:

        1) Three anchors per jamb.

    b. Compression Type: Not less than two anchors in each jamb.
    c. Postinstalled Expansion Type: Locate anchors not more than 6 inches from top and bottom of frame. Space anchors not more than 26 inches o.c.

6. Door Silencers: Except on weather-stripped doors, drill stops to receive door silencers as follows. Keep holes clear during construction.

    a. Single-Door Frames: Drill stop in strike jamb to receive three door silencers.

D. Fabricate concealed stiffeners, edge channels, and hardware reinforcement from either cold- or hot-rolled steel sheet.

E. Hardware Preparation: Factory prepare hollow metal work to receive templated mortised hardware; include cutouts, reinforcement, mortising, drilling, and tapping according to the Door Hardware Schedule and templates furnished as specified in Division 8 Section "Door Hardware."

1. Locate hardware as indicated, or if not indicated, according to.
2. Reinforce doors and frames to receive nontemplated, mortised and surface-mounted door hardware.
3. Comply with applicable requirements in ANSI/SDI A250.6 and ANSI/DHI A115 Series specifications for preparation of hollow metal work for hardware.
4. Coordinate locations of conduit and wiring boxes for electrical connections with Division 16 Sections.

2.9 STEEL FINISHES

A. Prime Finish: Apply manufacturer's standard primer immediately after cleaning and pretreating.

1. Shop Primer: Manufacturer's standard, fast-curing, lead- and chromate-free primer complying with ANSI/SDI A250.10 acceptance criteria; recommended by primer manufacturer for substrate; compatible with substrate and field-applied coatings despite prolonged exposure.

PART 3 - EXECUTION

3.1 EXAMINATION

A. Examine substrates, areas, and conditions, with Installer present, for compliance with requirements for installation tolerances and other conditions affecting performance of the Work.

B. Examine roughing-in for embedded and built-in anchors to verify actual locations before frame installation.

C. For the record, prepare written report, endorsed by Installer, listing conditions detrimental to performance of the Work.

D. Proceed with installation only after unsatisfactory conditions have been corrected.

3.2 PREPARATION

A. Remove welded-in shipping spreaders installed at factory. Restore exposed finish by grinding, filling, and dressing, as required to make repaired area smooth, flush, and invisible on exposed faces.

B. Prior to installation, adjust and securely brace welded hollow metal frames for squareness, alignment, twist, and plumbness to the following tolerances:

1. Squareness: Plus or minus 1/16 inch, measured at door rabbet on a line 90 degrees from jamb perpendicular to frame head.
2. Alignment: Plus or minus 1/16 inch, measured at jambs on a horizontal line parallel to plane of wall.
3. Twist: Plus or minus 1/16 inch, measured at opposite face corners of jambs on parallel lines, and perpendicular to plane of wall.
4. Plumbness: Plus or minus 1/16 inch, measured at jambs on a perpendicular line from head to floor.

C. Drill and tap doors and frames to receive nontemplated, mortised, and surface-mounted door hardware.

3.3 INSTALLATION

A. General: Install hollow metal work plumb, rigid, properly aligned, and securely fastened in place; comply with Drawings and manufacturer's written instructions.

B. Hollow Metal Frames: Install hollow metal frames of size and profile indicated. Comply with ANSI/SDI A250.11.

1. Set frames accurately in position, plumbed, aligned, and braced securely until permanent anchors are set. After wall construction is complete, remove temporary braces, leaving surfaces smooth and undamaged.

    a. At fire-protection-rated openings, install frames according to NFPA 80.
    b. Where frames are fabricated in sections because of shipping or handling limitations, field splice at approved locations by welding face joint continuously; grind, fill, dress, and make splice smooth, flush, and invisible on exposed faces.
    c. Install door silencers in frames before grouting.
    d. Remove temporary braces necessary for installation only after frames have been properly set and secured.
    e. Check plumbness, squareness, and twist of frames as walls are constructed. Shim as necessary to comply with installation tolerances.

2. Floor Anchors: Provide floor anchors for each jamb and mullion that extends to floor, and secure with postinstalled expansion anchors.

    a. Floor anchors may be set with powder-actuated fasteners instead of postinstalled expansion anchors if so indicated and approved on Shop Drawings.

3. Metal-Stud Partitions: Solidly pack mineral-fiber insulation behind frames.
4. In-Place Gypsum Board Partitions: Secure frames in place with postinstalled expansion anchors through floor anchors at each jamb. Countersink anchors, and fill and make smooth, flush, and invisible on exposed faces.
5. Installation Tolerances: Adjust hollow metal door frames for squareness, alignment, twist, and plumb to the following tolerances:

    a. Squareness: Plus or minus 1/16 inch, measured at door rabbet on a line 90 degrees from jamb perpendicular to frame head.
    b. Alignment: Plus or minus 1/16 inch, measured at jambs on a horizontal line parallel to plane of wall.
    c. Twist: Plus or minus 1/16 inch, measured at opposite face corners of jambs on parallel lines, and perpendicular to plane of wall.

d. Plumbness: Plus or minus 1/16 inch, measured at jambs at floor.

C. Hollow Metal Doors: Fit hollow metal doors accurately in frames, within clearances specified below. Shim as necessary.

1. Non-Fire-Rated Standard Steel Doors:

a. Jambs and Head: 1/8 inch plus or minus 1/16 inch.
b. Between Bottom of Door and Top of Threshold: Maximum 3/8 inch.
c. Between Bottom of Door and Top of Finish Floor (No Threshold): Maximum 3/4 inch.

2. Fire-Rated Doors: Install doors with clearances according to NFPA 80.

3.4 ADJUSTING AND CLEANING

A. Final Adjustments: Check and readjust operating hardware items immediately before final inspection. Leave work in complete and proper operating condition. Remove and replace defective work, including hollow metal work that is warped, bowed, or otherwise unacceptable.

B. Remove grout and other bonding material from hollow metal work immediately after installation.

C. Prime-Coat Touchup: Immediately after erection, sand smooth rusted or damaged areas of prime coat and apply touchup of compatible air-drying, rust-inhibitive primer.

END OF SECTION 081100

SECTION 087100 - FINISH HARDWARE

PART 1 - GENERAL:

1.1 RELATED DOCMENTS

A. Documents referred to in the DC Government Bid Documents, which include the Solicitation Documents, Contract Sections, Contract Clauses, Special Contract Requirements and Standard Contract Provisions for Use With Specifications for District of Columbia Government Construction Projects (January 2007) are part hereof the same as if repeated herein.

1.2 SUMMARY:

A. This section includes door hardware for two sets of exterior doors, metal and wood interior doors.

1.3 REFERENCES:

A. Documents and Institutes that shall be used in estimating, detailing and installing the items specified

1. ANSI Al 17.1 - Specifications for Making Buildings and Facilities Accessible to and Usable by Physically Handicapped People. CABO/ANSI AI 17.1-1992
2. NFPA 80 - Fire Doors and Windows. 1995 Edition
3. NFPA 101 - Life Safety Code. 1997 Edition
4. NFPA 101 - Life Safety Code. 1997 Edition
5. Local and state building codes.
6. UL Labeled for Rated Doors.
7. DHI - Door and Hardware Institute.
8. SDI - Steel Door Institute.
9. AW1 - Architectural Woodwork Institute.

1.4 SUBMITTALS:

A. Comply with pertinent provisions of Section 013300.

B. Hardware Schedule: Final hardware schedule shall be submitted in the manner indicated below. Coordinate hardware with doors, frames and related work to insure proper size, thickness, hand, function and finish of hardware. The schedule is to be in a vertical form, organized into "hardware sets" indicating complete designations of every item required for each door or opening. Include the following information:

1. Type, style, function, size and finish of each hardware item.
2. Name and manufacturer of each item.
3. Fastenings and other pertinent information.
4. Location of hardware set cross-referenced to indications on drawings both on floor plans and in door and frame schedule.
5. Explanation of all abbreviations, symbols, codes, etc., contained in schedules.
6. Mounting locations for hardware.
7. Door and frame sizes and materials.
8. Keying schedule.

C. Product Data: Product data shall be provided by manufacturer's technical product fact sheets for each item of hardware. Include whatever information may be necessary to show compliance with requirements, including instructions for installation and for maintenance of operating parts and finish.

D. Samples: Samples shall be provided as requested by COTR. All samples shall be returned to the finish hardware supplier when construction is completed.

E. Templates: Templates of finish hardware items to be supplied are to be furnished to each fabricator of doors, frames and other work to be factory-prepared for the installation of hardware.

F. Keying Schedule: A keying schedule shall be submitted using keyset symbols referenced in DHI manual "Keying Systems And Nomenclature". The keying schedule shall be indexed by door number, keyset, hardware heading number, cross keying instructions and special key stamping instructions.

G. Wiring Diagrams: Coordinate installation of the electronic hardware with the project electrical engineer and provide installation and technical data, including wiring diagrams, to the project electrical engineer and electrical sub-contractor. Upon completion of the electrical hardware installation, verify that all components are working properly and state in the required guarantee that this inspection has been performed.

H. Operations and maintenance data: At the completion of the job, furnish to the Contracting Officer, two copies of an owners operation and maintenance manual. The manual shall consist of a labeled hardcover three ring binder with the following technical information:

1. Maintenance instructions for each item of hardware.
2. Catalog pages for each product.
3. Parts list for each product.
4. Copy of final hardware schedule.
5. Copy of final keying schedule.

1.5 QUALITY ASSURANCE:

A. Substitutions: Manufacturers and model numbers listed are to establish a standard of quality and design, Any substitutions of products not listed in this specification must be approved by the COTR 10 days before bid date to allow sufficient time for addendum to be added to the bid document. In accordance with Section 016000, required data and physical samples must be provided.

B. Supplier Qualifications: Suppliers shall be recognized architectural finish hardware suppliers, with warehousing facilities, who have been furnishing hardware in the projects vicinity for a period of not less than 2 years and who is or employs an experienced A.H.C., who is available at reasonable times during the course of the work for consultation about products hardware requirements, to owner, architect and contractor.

C. Fire-rated openings: Fire-rated openings shall be provided with fire-rated hardware in compliance with NFPA Standard No. 80 and local building code requirements. Provide only hardware which has been tested and listed by UL for types and sizes of doors required and complies with requirements of door and door frame labels.

1.6 DELIVERY, STORAGE AND HANDLING.

A. Marking and Packaging: Mark each item or package separately, with identification related to hardware set number, door number and keyset symbol.

B. Delivery:

1. Deliver individually packaged and properly marked finish hardware at the proper time and location to avoid any delays in construction or installation.

2. At time of delivery, inventory hardware jointly with representatives of hardware supplier and hardware installer until each is satisfied that count is correct.

C. Storage:

1. A secure, dry lock-up with strong and sufficient shelving shall be provided for hardware delivered to the project, to protect the material and the finishes.

2. Control handling and installation of hardware items which are not immediately replaceable, so that completion of the work will not be delayed by hardware losses, both before and after installation.

1.7 WARRANTY:

A. All finish hardware products shall be covered by a one year factory warranty against defects in material and workmanship from the date of substantial completion of the project.

B. Supply warranty verification to the Contracting Officer for products that provide factory warranties for periods longer than one year.

1.7 MAINTENANCE:

A. Maintenance Service

1. Provide a yearly maintenance contract for service and parts for electronic automatic door control

B. Extra Materials:

1. Furnish 2% extra (not less than 1) of each hardware item furnished where replacement delivery time is longer than 4 weeks. This extra hardware is to be delivered directly to the COTR for maintenance purposes.
2. Furnish three dozen extra screws and other fasteners of each size, type, and finish used with the hardware items provided. These screws and fasteners are to be delivered to the hardware installer for use during installation. All extra screws and fasteners and all special installation tools furnished with the hardware shall be turned over to the COTR at the completion of the job.
3. To the greatest extent possible, all packaging, labeling, and instruction materials shall be made from recycled and/or biodegradable materials, with the highest percentage of post-consumer materials possible.
4. To the greatest extent possible, minimize protective packaging without causing damage to materials during shipment, delivery, storage, and handling.

PART 2 - PRODUCTS:

2.1 MANUFACTURERS:

A. Select manufacturers from the following under each product.

2.2 MATERIALS:

A. Screws and Fasteners:

1. Closers and exit devices provided for wood doors are to be furnished with thru-bolts.
2. All finish hardware shall be installed to manufacturer's recommendations, using screws, attachments and installation tools provided with the hardware. No other screws or attachments are acceptable.

B. Hinges:

1. Template: Provide template produced units only.

2. Exterior: All exterior hinges shall be heavy weight (. 180 or .190 ga.) five knuckle, two ball bearing, full mortise type with a stainless steel non-removable pin.

3. Interior: All interior hinges shall be standard weight (134 or . 146 ga.) five knuckle, two ball bearing, full mortise type. Provide heavy weight hinges on openings with high frequency usage as indicated in the hardware sets

4. Supply new hinges to match existing size, finish and tips.

5. Approved:

   a. Ives
   b. Hager
   c. Stanley

C. Pivots: Provide pivots as indicated in the drawings and hardware sets and provided by the floor closer manufacturer.

D. Flush Bolts:

1. As codes and conditions permit, provide on the inactive door of pairs, extension flush bolts at top and bottom of the doors. Provide all necessary strikes, shims and guides to insure proper installation. Supply 305mm length or as scheduled.

2. Dust Proof Strikes: As conditions allow, provide dust proof strikes with each bottom flush bolt.

3. Approved:

   a. Ives
   b. Rockwood

F. Coordinators:

1. Provide non-handed fully automatic coordinating devices for sequential closing of paired doors with an astragal.

2. Supply all coordinator accessories to eliminate problems with installing vertical rod exit devices and parallel arm closers.

3. All coordinators shall be provided with enough filler piece to close the header area for an architecturally clean line.

4. Approved:

   a. Ives

G. Locks:

1. All locks and latchsets shall be mortise type.

2. Locks and latchsets shall meet ANSI Al 56.2, Series 1000, Grade 1.
3. Approved:

   a. Schlage L9000 Series

H. Lock Trim:

1. All mortise trim shall have thru-bolted installation and meet the guidelines for ADA and requirements for UFAS and ANSI 1 17. 1 which require ease of accessibility for the handicapped and disabled.

2. The lever trim shall be solid bronze material.The length of lever shall be 114mm for commercial or institutional use. Lock trim where specified on outside shall have special finish to match the traditional historical rubbed-smooth #6 buff satin finish. To replicate a traditional satin or rubbed finish refer to CSI specification sections 05700 (ornamental metals) and section 05950 (bronze cleaning and refinishing.)
   Trim shall match lever used in phase one, supplier to submit a sample for approval.

3. Approved:

   a. As specified.

I. Exit Devices:

1. All exit devices are to be architectural grade crossbar type.

2. Exit Device Trim: Furnish pull trim on all exterior and non fire rated exit devices as indicated in the hardware sets. Provide lever trim on all fire rated exit devices or as indicated in the hardware sets.

3. Dogging: All non-rated devices are to be provided with hex-key dogging.

4. Attachments: All devices are to be supplied and installed with thru-bolts. Devices are to be thru-bolted to the escutcheon trim for added strength and security.

5. Approved:

   b. Von Duprin.

J. Surface Door Closers:

1. All surface closers shall be full rack and pinion type with full molded cover and shall project no more than 55mm from the mounting surface. Closers shall be non-handed and be provided with non-gumming and non-freezing hydraulic fluid. Closers shall have two valves, hex-key adjusted to independently regulate closing and latch speed. Closers shall have separate valves, hex-key adjusted to independently regulate backcheck cushioning.

2. Approved:

   a. LCN 4000 Series

4. Options: As dictated by codes or indicated in the drawings or hardware sets provide arm and feature options - such as, adjustable delayed action, barrier free, positive stop and/or hold open arms, low profile arms, rigid parallel arm and special mounting brackets and plates.

5. All closers shall be installed on wood doors with thru-bolts.
6. All closers shall be mounted on the room side of opening where possible

K. Push Plates:

1. Push Plates: Push plates shall be 1.25mm thickness with 4 beveled edges. Plates shall be 100mm x 400mm, where door stiles allow, and be cut for cylinder or thumbturn as needed.
2. Approved:

    a. Ives
    b. Rockwood
    c. Trimco

L. Pull Plates

1. Pull Plates: Pull plates shall be 1.25mm thickness with 4 beveled edges. Plates shall be 100mm x 400mm and be cut for cylinder or thumbturn as needed. Pull shall be 19 mm rod at 200mm centers.

2. Approved

    a. Ives 8302
    b. Rockwood
    c. Trimco

M. Protective Plates:

1. Kick and Mop Plates: All kick and mop plates shall be 200mm by 50mm & 25mm less than door width. Plates shall be 1.25mm stainless steel and beveled on three sides.

2. Armor Plates: Armor plates shall be 864mm by 50mm less than door width or as indicated in the hardware sets. On labeled doors the armor plates shall be a maximum of 400mm in height. Plates shall be 1.25mm and beveled on three sides. Provide for hardware cutouts as needed.

3. Approved:

    a. Ives
    b. Rockwood
    c. Trimco

N. Door Stops and Holders:

1. Wall and Floor Stops: Supply wall stops where needed to protect doors or door hardware. When wall conditions do not permit use of wall stop provide floor stops with risers as needed to adjust for floor conditions.

2. Approved:

   a. Ives
   b. Rockwood

3. Overhead Stops: Where wall or floor stops are not applicable provide surface overhead stops. Supply overhead stops/holders with extruded bronze channels arms and brackets. All stops shall be supplied and installed with thru-bolts.
4. Approved:

   a. Rixson #1 Series
   b. Corbin/Russwin DH-50000 SERIES
   c. Glynn Johnson 100 series

O. Thresholds and Weatherstripping:

1. Supply thresholds, weatherstrip, gasketing and door sweeps as indicated in the drawings or in the hardware sets. All thresholds shall conform to state and local handicap codes. Thresholds for floor closers shall be supplied by the floor closer manufacturer. Supply from the following list of manufacturers:

2. Approved:

   a. Ultra Industries
   b. Pemko
   c. National Guard Products
   d. Rixson

P. Silencers:

1. Provide Silencers on all hollow metal door frames that do not have gasketing or weatherstrip specified.

2. Install 2 silencers on pairs and 3 silencers on single openings.

3. Smoke Detectors and Magnetic Holders:

Q. Electromagnet holders: All fire labeled cross corridor and double egress doors shall be held open by High Hold wall mounted electromagnet door holders, surface closers and ceiling mounted smoke detectors wherever possible. The wall magnets shall have concealed wiring and thru-bolted armature. Magnet holding power shall be 136kg and be protected against transients and surges up to 600 volts. Magnets shall be fail-safe with a positive release button to initiate closing motion when released by a remote smoke

detector or fire alarm. Provide Rixson FM993 x 2-9734 or as indicated in the hardware sets.

2.3 FINISHES:

A. Provide the finish hardware items in the following finishes:

Exterior hinges	612
Interior hinges	612
Pivots	612
Floor closers	612
Flush Bolts	612
Coordinators	Black
Locks	612
Exit Devices	612
Surface Door Closers	691
Push Plates	612
Pulls and Pull Plates	612
Protective Plates	612
Door Stops and Holders	612
Weatherstrip and Thresholds	Bronze
Smoke Detectors and Magnets	691

2.4 KEYING:

A. General: Supplier will meet with Contracting Officer to finalize keying requirements and supply grand master key system for the project.

B. Keys: Provide nickel silver keys only. Furnish 4 change keys for each lock; 5 master keys for each master system and 5 grandmaster keys for each grandmaster system. Deliver all keys to the Contracting Officer.

C. Construction Keying: Provide temporary construction Keying. Construction keying shall be removed in the presence of the Contracting Officer after completion of construction and the permanent keys turned over to the owner. Furnish 5 construction master keys and 3 removal tools and deliver to the contractor.

2.5 KEY CONTROL:

A. Key Management: Key control shall be provided by supplying a complete key storage and management system. Each key shall be fully cut, indexed, tagged and installed on cabinet hooks by the lock supplier and shipped with the locks. Key cabinet provided shall be

wall mounted type with capacity plus 50% and provide storage for extra set of interchangeable cores for exterior doors.

PART 3 - EXECUTION:

3.1 EXAMINATION:

A. Examine doors, frames and related items for conditions that would prevent the proper application of any finish hardware items. Do not proceed with installation until all defects are corrected.

3.2 INSTALLATION:

A. Mount hardware units at heights indicated in "Recommended Locations for Builders Hardware for Standard Steel Doors and Frames" by the Door and Hardware Institute, except as specifically indicated or required to comply with governing regulations, and except as may be otherwise directed by the Contracting Officer.

B. Install each hardware item in compliance with the manufacturer's instructions and recommendations. Wherever cutting and fitting is required to install hardware onto or into surfaces which are later to be painted or finished in another way, coordinate removal, storage and reinstallation or application of surface protections with finishing work specified in the Division-9 sections. Do not install surface-mounted items until finishes have been completed on the substrate.

C. Set units level, plumb and true to line and location. Adjust and reinforce the attachment substrate as necessary for proper installation and operation.

D. Drill and countersink units which are not factory-prepared for anchorage fasteners. Space fasteners and anchors in accordance with industry standards.

E. Set thresholds for exterior doors in full bed of butyl-rubber or polyisobutylene mastic sealant.

D. Install hardware to existing locations where possible.

E. All hardware must be installed by a qualified installation company with not less than five-(5) year's experience with installing doors, frames and finished hardware.

F. The general contractor shall submit a survey of all salvaged doors and hardware to be reused, with a list of the door location and the requirements that where possible the same door will be reinstalled in the same frame.

G. The contractor shall plug all existing holes at door jambs with wood dowels prior to installing existing and/or new hinges.

3.3 FIELD QUALITY CONTROL:

A. After installation has been completed, obtain the services of a qualified hardware consultant to check for proper application of finish hardware, according to the finish hardware schedule and keying schedule. In addition, check all hardware for adjustment and proper operation.

B. The general contractor shall include a service contract for the automatic operators for one year.

3.4 ADJUST AND CLEAN:

A. Adjust and check each operating item of hardware and each door, to ensure proper operation or function of every unit. Replace units which cannot be adjusted to operate freely and smoothly as intended for the application made.

B. Clean adjacent surfaces soiled by hardware installation.

C. Final adjustment: Wherever hardware installation is made more than one month prior to acceptance or occupancy of a space or area, return to the work during the week prior to acceptance or occupancy and make final check and adjustment of all hardware items in such space or area. Clean operating items as necessary to restore proper function and finish of hardware and doors. Adjust door control devices to compensate for final operation of heating and ventilating equipment.

D. Instruct owner's personnel in proper adjustment and maintenance of hardware and hardware finishes, during the final adjustment of hardware.

E. Continued Maintenance: Approximately six months after the acceptance of hardware in each area, the installer, accompanied by the contractor, shall return to the project and re-adjust every item of hardware to restore proper function of doors and hardware. Consult with and instruct Owner's personnel in recommended additions to the maintenance procedures. Replace hardware items which have deteriorated or failed due to faulty materials or installation of hardware units. Prepare a written report of current and predictable problems in the performance of the hardware.

3.5 PROTECTION:

A. The contractor shall use all means at his disposal to protect all finish hardware items from abuse, corrosion and other damage until the COTR accepts the project as complete.

3.6 HARDWARE SCHEDULE:

SPECWORKS # 106563

HW SET: 01
DOOR NUMBER:
012A

EACH TO HAVE:

1	EA	DEMO EXISTING DOOR AND FRAME	

HW SET: 02
DOOR NUMBER:
018A 106A

EACH TO HAVE:

6	EA	HINGE	5BB1HW 4.5 X 4.5 NRP	630	IVE
1	EA	POWER TRANSFER	EPT-10	689	VON
1	EA	MULLION	9954	689	VON
1	EA	PANIC HARDWARE	99L 996L	612	VON
1	EA	PANIC HARDWARE	EL99L 996L	626	VON
2	EA	RIM CYLINDER	20-057	626	SCH
2	EA	CORE ONLY	23-030	626	SCH
2	EA	CONSTRUCTION CORE	23-030-ICX	626	SCH
2	EA	SURFACE CLOSER	4111 SCUSH SRI	691	LCN
2	EA	KICK PLATE	8400 8" X 2" LDW	612	IVE
1	SET	SEALS	5050B	BRN	NGP
2	EA	DOOR SWEEPS	101AV	DKB	NGP
1	EA	THRESHOLD	896S	BR	NGP
1	EA	CARD READER	CARD READER BY OTHERS	612	
2	EA	DOOR POSITION SWITCH	679-05		SCE

HW SET: 03
DOOR NUMBER:
105B 105E

EACH TO HAVE:

3	EA	HINGE	MATCH EXISTING PREP WITH NEW HINGES	612	IVE
1	EA	CLASSROOM LOCK	L9070T 06L	626	SCH
1	EA	CORE ONLY	23-030	626	SCH
1	EA	CONSTRUCTION CORE	23-030-ICX	626	SCH
1	EA	SURFACE CLOSER	4111 SHCUSH	691	LCN
1	EA	KICK PLATE	8400 8" X 2" LDW	612	IVE
1	SET	SEALS	5050B	BRN	NGP

HW SET: 04
DOOR NUMBER:
105G

EACH TO HAVE:

3	EA	HINGE	MATCH EXISTING PREP WITH NEW HINGES	612	IVE
1	EA	PANIC HARDWARE	99L 996L	612	VON
1	EA	RIM CYLINDER	20-057	626	SCH
1	EA	CORE ONLY	23-030	626	SCH
1	EA	CONSTRUCTION CORE	23-030-ICX	626	SCH
1	EA	SURFACE CLOSER	4111 SHCUSH	691	LCN
1	EA	KICK PLATE	8400 8" X 2" LDW	612	IVE
1	SET	SEALS	5050B	BRN	NGP

HW SET: 05
DOOR NUMBER:
106

EACH TO HAVE:

1	SET	PIVOT SET	7226F	630	IVE
1	EA	PIVOT	7226F INT	630	IVE
1	EA	PANIC HARDWARE	33A-L	626	VON
1	EA	RIM CYLINDER	20-057	626	SCH
1	EA	CORE ONLY	23-030	626	SCH
1	EA	CONSTRUCTION CORE	23-030-ICX	626	SCH
1	EA	SURFACE CLOSER	4111 SCUSH	691	LCN

1	SET	SEALS	5050B	BRN	NGP
1	EA	DOOR SWEEPS	101AV	DKB	NGP
1	EA	THRESHOLD	896S	BR	NGP

HW SET: 06
DOOR NUMBER:
101B

EACH TO HAVE:

2	EA	PUSH PLATE	8200 4" X 16"	612	IVE
1			SCREW DOOR IN CLOSED POSITION		

HW SET: 07
DOOR NUMBER:
105A

EACH TO HAVE:

3	EA	HINGE	5BB1 4.5 X 4	639	IVE
1	EA	PASSAGE SET	L9010 06L	626	SCH
1	EA	OVERHEAD STOP	410S	612	GLY
3	EA	SILENCER	SR64	GRY	IVE

HW SET: 08
DOOR NUMBER:
105C 105F

EACH TO HAVE:

3	EA	HINGE	MATCH EXISTING PREP WITH NEW HINGES	612	IVE
1	EA	STOREROOM LOCK	L9080T 06L	626	SCH
1	EA	CORE ONLY	23-030	626	SCH
1	EA	CONSTRUCTION CORE	23-030-ICX	626	SCH
1	EA	OVERHEAD STOP	410S	612	GLY
3	EA	SILENCER	SR64	GRY	IVE

HW SET: 09
DOOR NUMBER:
103B

EACH TO HAVE:

3	EA	HINGE	5BB1 4.5 X 4	639	IVE
1	EA	PRIVACY SET	L9040 06L	626	SCH
1	EA	MOP PLATE	8400 4'X X1' LDW	612	IVE
1	EA	KICK PLATE	8400 8" X 2" LDW	612	IVE
1	EA	WALL STOP	WS406CVX	612	IVE
3	EA	SILENCER	SR64	GRY	IVE

HW SET: 10
DOOR NUMBER:
103C

EACH TO HAVE:

3	EA	HINGE	5BB1 4.5 X 4 NRP	639	IVE
1	EA	CLASSROOM LOCK	L9070T 06L	626	SCH
1	EA	CORE ONLY	23-030	626	SCH
1	EA	CONSTRUCTION CORE	23-030-ICX	626	SCH
1	EA	WALL STOP	WS406CVX	612	IVE
3	EA	SILENCER	SR64	GRY	IVE

HW SET: 11
DOOR NUMBER:
107B

EACH TO HAVE:

3	EA	HINGE	MATCH EXISTING PREP WITH NEW HINGES	612	IVE
1	EA	PASSAGE SET	L9010 06L	626	SCH
1	EA	SURFACE CLOSER	4011 H	691	LCN
1	EA	KICK PLATE	8400 8" X 2" LDW	612	IVE
1	SET	SEALS	5050B	BRN	NGP

HW SET: 12
DOOR NUMBER:
003 012

EACH TO HAVE:

3		HINGE	MATCH EXISTING PREP WITH NEW HINGES		
1	EA	STOREROOM LOCK	L9080T 06L	626	SCH
1	EA	CORE ONLY	23-030	626	SCH
1	EA	CONSTRUCTION CORE	23-030-ICX	626	SCH
1	EA	SURFACE CLOSER	4011 H	691	LCN
1	EA	KICK PLATE	8400 8" X 2" LDW	612	IVE
1	EA	WALL STOP	WS406CVX	612	IVE
3	EA	SILENCER	SR64	GRY	IVE

HW SET: 13
DOOR NUMBER:
105D

EACH TO HAVE:

3	EA	HINGE	MATCH EXISTING PREP WITH NEW HINGES	612	IVE
1	EA	PASSAGE SET	L9010 06L	626	SCH
1	EA	OVERHEAD STOP	100S	612	GLY
3	EA	SILENCER	SR64	GRY	IVE

END OF SECTION 087100

SECTION 092310 – LIME PLASTER REPAIRS

PART 1 - GENERAL

1.1 RELATED DOCUMENTS

A. Documents referred to the DC Government Bid Documents, which include the Solicitation Documents, Contract Sections, Contract Clauses, Special Contract Requirements and Standard Contract Provisions for Use With Specifications for District of Columbia Government Construction Projects (January 2007) are part hereof the same as if repeated herein.

1.2 SUMMARY

A. Section Includes:

1. Lime Plasterwork patches and repairs to existing lime plaster on masonry, wood lath, and metal lath.

1.3 REFERENCES

A. ASTM C 136-96a – Standard Test Method for Sieve Analysis of Fine and Coarse Aggregates; 1996

B. Technical Advice Note 1, Preparation and Use of Lime Mortars, Historic Scotland, ISBN 1903570, Revised Edition 2003.

C. EN459/BS459 – European Norm and British Standards for Specifications for Building Limes; 2001

D. ASTM-C-3363 – Standard Test method for Film Hardness by Pencil Test.

E. National Park Service Preservation Brief 21 “Repairing Flat Plaster Walls and Ceilings”

1.4 ACTION SUBMITTALS

A. Product Data: For each type of product indicated and/or proposed for use. Include recommendations for application and use. Include test data substantiating that products comply with requirements.

1.5 DEFINITIONS

A. Lead Plasterer: individual worker who has exemplary skills and experience in historic plaster restoration who has been approved to serve as crew leader, shall be present at all times during masonry restoration, and shall personally direct the work. The approval shall not be transferable either to other individuals within the company or to personnel of another company.

B. Plasterers: Individual workers who have exemplary skills and experience in historic plaster restoration. The approval shall not be transferable either to other individuals within the company or to personnel of another company. Experience with gypsum board finishing, painting, gypsum plastering, and/or finishing exterior insulation and finish systems (EIFS) alone are insufficient experience for patching and repairing lime plasters.

C. Plaster Crew Workers: Lead Plasterers and tenders.

1.6 INFORMATIONAL SUBMITTALS

A. Qualification Data: For plaster company including lead plasterer, plasterers, and plaster crew members.

B. Quality-Control Program.

C. Restoration Program.

1.7 ACTION SUBMITTALS

A. Product Data: For each type of product indicated. Include recommendations for application and use. Include test data substantiating that products comply with requirements.

1.8 QUALITY ASSURANCE

A. Plaster Company Qualifications: Engage an experienced plaster restoration firm to perform work of this Section. Firm shall have completed work on three projects within the last ten years similar in material, design, and extent to that indicated for this Project with a record of successful in-service performance and employed personnel skilled in the process and operations indicated for the job. Experience with gypsum board finishing, painting, gypsum plastering, and/or finishing exterior insulation and finish systems (EIFS) alone are insufficient experience for patching and repairing lime plasters.

1. Lead Plasterer (Supervisor): Plaster company shall maintain experienced full-time supervisors on Project site during times that plaster work is in progress. Supervisors shall not be changed during Project except for causes beyond the control of restoration specialist firm. Lead Plasterer shall have performed plaster work successfully on at least three projects of a similar size and type to this project.

2. Plasterers: Plaster company shall employ experienced plasters for the Work and shall maintain them for the Project during times that plaster work is in progress. Plasterers shall not be changed during Project except for causes beyond the control of restoration specialist firm. Plasterer shall have performed plaster work successfully on at least 2 projects.

3. Plaster Crew Worker Qualifications: Persons who are experienced and specialize in restoration work of types they will be performing.

B. Source Limitations: Obtain each type of material for plaster work (lime, sand, etc.) from one source with resources to provide materials of consistent quality in appearance and physical properties.

C. Quality-Control Program: Prepare a written quality-control program for this Project to systematically demonstrate the ability of personnel to properly follow methods and use materials and tools without damaging building materials. Include provisions for supervising performance and preventing damage due to worker fatigue.

D. Restoration Program: Prepare a written, detailed description of materials, methods, equipment, and sequence of operations to be used for each phase of patching and repair work including protection of surrounding materials and Project site.

1. Include methods for keeping pointing mortar damp during curing period.
2. Include techniques and procedures for preparing surfaces to receive new plaster finish.
3. If materials and methods other than those indicated are proposed for any phase of plaster restoration work, add to the Quality-Control Program a written description of such materials and methods, including evidence of successful use on comparable projects, and demonstrations to show their effectiveness for this Project and worker's ability to use such materials and methods properly.

E. Mockups: Before plastering, install mockups of at least 9 sq. ft. in surface area on each type of substrate to demonstrate aesthetic effects and set quality standards for materials and execution.

1. Install mockups with scratch, brown and finish coats exposed as layer and with the finish to replicate surfaces surrounding those areas to be patched, repaired.
2. Approved mockups may become part of the completed Work if undisturbed at time of Substantial Completion.

3. Mock-ups shall be witnessed by the COTR.
4. Obtain COTR's approval of mockups before starting the remainder of the work.

DELIVERY, STORAGE, AND HANDLING

F. Deliver other materials to Project site in manufacturer's original and unopened containers, labeled with manufacturer's name and type of products.

G. Store materials inside under cover and keep them dry and protected against damage from weather, direct sunlight, surface contamination, corrosion, construction traffic, and other causes.

H. Store hydrated lime in manufacturer's original and unopened containers. Discard lime if containers have been damaged or have been opened for more than two days.

I. Store lime putty covered with water in sealed containers.

J. Store sand where grading and other required characteristics can be maintained and contamination avoided.

K. Obtain affidavit from delivery service stating that materials were stored and shipped per manufacture's requirements.

1.9 PROJECT CONDITIONS

A. Room Temperatures: Maintain temperatures at not less than 55 deg F or greater than 80 deg F for at least seven days before application of plaster, continuously during application, and for seven days after plaster has set or until plaster has dried.

B. Restrict traffic from area where lime plaster has been applied during initial curing.

C. Avoid conditions that result in plaster drying out too quickly.

1. Distribute heat evenly; prevent concentrated or uneven heat on plaster.
2. Maintain relative humidity levels for prevailing ambient temperature that produce normal drying conditions.
3. Ventilate building spaces in a manner that prevents drafts of air from contacting surfaces during plaster application and until initial curing of plaster is complete.

1.10 COORDINATION

A. Notify COTR to assure building occupants are notified of the work schedule at least one week in advance of work. Coordinate plaster work with the uses of the building to minimize disruption to the occupants. For areas that cannot be closed off entirely redirected around small areas of work. Plan and execute the Work accordingly.

PART 2 - PRODUCTS

2.1 PLASTER MATERIALS

A. The plasters may be job-mixed or pre-mixed, as approved by the COTR.

B. Plaster and plaster products containing gypsum or cement will not be approved for this project. Includes plaster of Paris and over-the-counter patching plaster.

C. Pre-mixed Scratch (1st base coat)

1. Basis-of-Design Product: Subject to compliance with requirements, Virginia Lime Works; VA (434-929-8113): Enviro-Ment Render Coat Mix&Go Plaster Stucco or comparable product.

D. Job-mixed Scratch (1st base coat)

1. Subject to compliance with requirements, available products that may be incorporated into the Work include, but are not limited to, the following:
   a. Virginia Lime Works; VA (434-929-8113): Natural Hydrualic Lime (NHL 3.5)
   b. Eco stucco; (415-331-3886): Natural Hydraulic Lime (NHL 3.5)

E. Pre-mixed Brown Coat (2nd Coat)

1. Basis-of-Design Product: Subject to compliance with requirements, Virginia Lime Works; VA (434-929-8113): Enviro-Ment Render Coat Mix&Go Plaster Stucco or comparable product.

F. Job-Mixed Brown Coat (2nd Coat)

1. Basis-of-Design Product: Subject to compliance with requirements, Eco-stucco; (414-331-3886) TRADILIME or comparable product.

G. Pre-mixed Finish Coat (Top coat)

1. Basis-of-Design Product: Subject to compliance with requirements, Virginia Lime Works; VA (434-929-8113): Enviro-Ment Interior Finish Plaster or comparable product.

H. Pre-mixed Finish Coat (Top coat)

1. Basis-of-Design Product: Subject to compliance with requirements, Eco-stucco; (414-331-3886) TRADILIME or comparable product.

I. Aggregates for Job-Mixed Scratch and Brown Plaster Coats

1) Sand: ASTM C 35, sand. If necessary to improve workability, sand may be amended to improve gradation.

J. Water for Mixing and Finishing Plaster: Potable and free of substances capable of affecting plaster set or of damaging plaster, lath, or accessories.

2.2 ACCESSORIES

A. General: Comply with ASTM C 841 and coordinate depth of trim and accessories with thicknesses and number of plaster coats required.

B. Expanded-Metal Lath: ASTM C 847, cold-rolled carbon-steel sheet, ASTM A 653/A 653M, G60, hot-dip galvanized zinc coated.
   1. Diamond-Mesh Lath: Flat or Self-furring, 2.5 lb/sq. yd..
   2. Manufacturers: Subject to compliance with requirements, available manufacturers offering products that may be incorporated into the Work include, but are not limited to, the following:
      a. Alabama Metal Industries Corporation; a Gibraltar Industries company.
      b. CEMCO.
      c. Clark Western Building Systems.
      d. Dietrich Metal Framing; a Worthington Industries company.
      e. MarinoWARE.
      f. Phillips Manufacturing Co.

C. Wood Lath: ¼ inch X 2 inch (actual) wood new or reuse of existing. For reused, damp with water before applying scratch plaster coat to assure lime plaster cures properly.

D. Plaster Washers: (for reattaching loose ceiling plaster to wood lath, if plaster keys are broken)
   1. Flat Head Wood Screws (stainless steel) with 1 ¼ inch diameter metal washers.
   2. Available from Wm A. Kilan Hardware (215-247-0945).

E. Re-adhesive Mix (for reattaching loose plaster to masonry walls, stud walls, or ceilings with metal or wood lath.)
   1. Basis-of-Design Product: Subject to compliance with requirements, provide Big Wally's Plaster Magic Adhesive (Brattleboro, VT, 802-254-1330, www.plastermagic.com) or comparable product.
   2. May be used instead of plaster buttons, if approved by COTR.

F. Metal Accessories
   1. Cornerite: Fabricated from expanded-metal lath with ASTM A 653/A 653M, G60, hot-dip galvanized zinc coating.
   2. Striplath: Fabricated from expanded-metal lath with ASTM A 653/A 653M, G60, hot-dip galvanized zinc coating.
   3. Provide Cornerbeads: Fabricated from zinc.
   4. Casing Beads: Fabricated from zinc; square-edged style; with expanded flanges.

5. Control Joints: Fabricated from zinc; one-piece-type, folded pair of unperforated screeds in M-shaped configuration; with perforated flanges and removable protective tape on plaster face of control joint.
6. Expansion Joints: Fabricated from zinc; folded pair of unperforated screeds in M-shaped configuration; with expanded flanges.
7. Two-Piece Expansion Joints: Fabricated from zinc; formed to produce slip-joint and square-edged reveal that is adjustable from 1/4 to 5/8 inch wide; with perforated flanges.

2.3 MISCELLANEOUS MATERIALS

A. Fasteners for Attaching Metal Lath to Substrates: Complying with ASTM C 841.

B. Wire: ASTM A 641/A 641M, Class 1 zinc coating, soft temper, not less than 0.0475-inch diameter.

C. Fiberglass Mesh Tape: For covering cracks.

2.4 PLASTER MIXES

A. Job-mixed and Remixed Plasters: Comply manufacturer's written instructions for applications indicated.

PART 3 - EXECUTION

3.1 EXAMINATION

A. Examine nonstructural and structural substrate, for conditions affecting performance of the Work.

3.2 PREPARATION

A. Protect adjacent surfaces and items that are not to receive plaster repair, but which cannot be removed from soiling, spattering, moisture deterioration, and other harmful effects caused by plastering.

B. Remove hardware, electrical switches and outlet plates, light fixtures including cover plates, and other items already in place. After completion of work, reinstall items using workers skilled in the trades involved.

C. Damp clean wood lath from ceiling and wall areas that the plaster will be patched . Damp clean to remove dust and dirt and to keep the lath from twisting when the new

wet plaster is applied. Dampen after the damaged plaster is cleaned out and loose lath is nailed to stud or joist with stainless steel screws.

3.3 PLASTER, GENERAL

A. Do not deviate more than plus or minus 1/8 inch in 10 feet from a true plane in finished plaster surfaces, as measured by a 10-foot straightedge placed on surface.

B. Finish plaster flush with existing plaster surfaces. Provide plaster surfaces that are ready to receive field-applied finishes indicated.

C. Repaired and replaced plaster areas shall be free of eliminate cracks, dents, blisters, buckles, crazing and check cracking, dry outs, efflorescence, sweat outs, and similar defects and where bond to substrate has failed.

3.4 PLASTER COATS

A. Scratch Coat
1. Provide approved mix.
2. Apply in thickness to match existing wall but no less than 3/8 inch on masonry substrate and wood lath, 5/8” on metal lath.
3. Comb surface to create mechanical bond for brown coat. .

B. Brown Coat:
1. Provide approved mix.
2. Apply in thickness to match existing wall but no less than 3/8 inch.
.

C. Finish Coats:
1. Provide approved mix.
2. Apply in thickness to match existing wall but no less than 1/8 inch.
3. Finish to match surface texture of the plaster surrounding the repair area.
4. Feather new finish into existing, so blend the new repair into the exsiting plaster.
5. Provide troweled, textured, and float finish to match finish of existing surrounding wall.

3.5 MASONRY WALLS. PATCHING DETERIORATED PLASTER

A. Removed plaster damaged by water or effloresces and plaster that is disadhered from masonry wall., Remove damaged plaster to the brick substrate.

B. Dampen masonry wall areas in repair area. Dampen the walls to the point that misted water on the wall takes 2 to 3 seconds to absorb. Start dampen operations to allow

masonry be rehydrated. Dampening walls prevents moisture in the plaster from being drawn into the masonry and allow proper curing of the plaster.

C. Provide three coat plaster wall.

D. Paint after plaster patch area is dry. Allow plaster to dry before

3.6 WOOD FRAMING WITH WOOD AND METAL LATH: PATCHING DETERIORATED PLASTER

A. Removed plaster damaged by water or effloresces. Remove plaster that is disadhered (plaster keys broken) and has a gap of more than ½ inch between the plaster to the lath. Remove damaged plaster to the lath. Vacuum plaster keys and plaster dust from between and behind lath strips.

B. Determine if existing lath is reusable. If so attach loose lath to wood framing members with stainless steel screws.

C. If existing lath is deteriorated, provide new wood attach with non-ferrous screw or if metal lath with non-ferrous screws and wire.

D. If existing lath is to be reused, damp clean wood lath from ceiling and wall areas that the plaster will be patched. Damp clean to remove dust and dirt. Dampening old wood lath prevents it from twisting when the new wet plaster is applied.

E. Provide three coat plaster wall. Assure scratch coat forms keys in lath.

F. Paint after plaster patch area is dry. Allow plaster to dry before

3.7 WOOD FRAMING WITH WOOD AND METAL LATH: REATTACHING LOOSE PLASTER

A. Plaster Washer Attachment Method:
1. Vacuum plaster keys and plaster dust from between and behind lath strips.
2. Provide plaster washers at approximately 12 inch centers, staged.
3. Screw washer tight to draw loose plaster into the framing. Counter sink screw.
4. Provide fiberglass mesh tape over cracks in plaster repair area.
5. Provide skim-coat finish over washers and tape to blend finish with surrounding plaster.

B. Plaster Adhesive Method:
1. On the face of the plaster drill holes throughout the area with loose plaster and along edges of intact area.
2. Vacuum plaster keys and plaster dust from between and behind lath strips.

3. Spray bonding agent into holes and along plaster crack at approximately 4 inch centers.
4. Inject adhesive through drill holes until adhesive flows from adjacent holes.
5. Screw washer tight to draw loose plaster into the framing until adhesive cures. Remove screws after adhesive sets.
6. Provide skim-coat finish over drill holes and crack to blend finish with surrounding plaster.
7.

3.8 PAINTING

A. Paint after lime plaster has thoroughly dried.
   1. Wet plaster will cause new paint to disadhere.

3.9 INSTALLING ACCESSORIES

A. General: Install to match existing installation.

3.10 CLEANING AND PROTECTION

A. Remove temporary protection and enclosure of other work. Promptly remove plaster from door frames, windows, and other surfaces not indicated to be plastered. Repair floors, walls, and other surfaces stained, marred, or otherwise damaged during plastering.

END OF SECTION 092310

092500 - GYPSUM AND CEMENT BOARDS

PART 1 - GENERAL

1.1 RELATED DOCUMENTS

A. Documents referred to the DC Government Bid Documents, which include the Solicitation Documents, Contract Sections, Contract Clauses, Special Contract Requirements and Standard Contract Provisions for Use With Specifications for District of Columbia Government Construction Projects (January 2007) are part hereof the same as if repeated herein.

1.2 SUMMARY

A. This Section includes the following:

1. Gypsum board.
2. Tile backing panels.

B. Related Sections include the following:

1. Division 6 Section "Rough Carpentry" for wood framing and furring that supports gypsum board.
2. Division 9 Section "Non-Load-Bearing Steel Framing" for non-structural framing and suspension systems that support gypsum board.
3. Division 9 Section “Interior Painting” for primers applied to gypsum board surfaces.

1.3 SUBMITTALS

A. Product Data: For each type of product indicated.

B. Samples: For the following products:

1. Trim Accessories: Full-size Sample in 12-inch- long length for each trim accessory indicated.

1.4 QUALITY ASSURANCE

A. Fire-Resistance-Rated Assemblies: For fire-resistance-rated assemblies, provide materials and construction identical to those tested in assembly indicated according to ASTM E 119 by an independent testing agency.

1.5 STORAGE AND HANDLING

A. Store materials inside under cover and keep them dry and protected against damage from weather, condensation, direct sunlight, construction traffic, and other causes. Stack panels flat to prevent sagging.

1.6 PROJECT CONDITIONS

A. Environmental Limitations: Comply with ASTM C 840 requirements or gypsum board manufacturer's written recommendations, whichever are more stringent.

B. Do not install interior products until installation areas are enclosed and conditioned.

C. Do not install panels that are wet, those that are moisture damaged, and those that are mold damaged.

1. Indications that panels are wet or moisture damaged include, but are not limited to, discoloration, sagging, or irregular shape.
2. Indications that panels are mold damaged include, but are not limited to, fuzzy or splotchy surface contamination and discoloration.

PART 2 - PRODUCTS

2.1 PANELS, GENERAL

A. Size: Provide in maximum lengths and widths available that will minimize joints in each area and that correspond with support system indicated.

2.2 INTERIOR GYPSUM BOARD

A. General: Complying with ASTM C 36/C 36M or ASTM C 1396/C 1396M, as applicable to type of gypsum board indicated and whichever is more stringent.

1. Available Manufacturers: Subject to compliance with requirements, manufacturers offering products that may be incorporated into the Work include, but are not limited to, the following:

a. American Gypsum Co.
b. BPB America Inc.
c. G-P Gypsum.
d. Lafarge North America Inc.
e. National Gypsum Company.
f. PABCO Gypsum.
g. Temple.
h. USG Corporation.

B. Regular Type:

1. Thickness: 1/2 inch.
2. Long Edges: Tapered.

2.3 TILE BACKING PANELS

A. Water-Resistant Gypsum Backing Board: ASTM C 630/C 630M or ASTM C 1396/C 1396M. For use in shower room.

1. Available Manufacturers: Subject to compliance with requirements, manufacturers offering products that may be incorporated into the Work include, but are not limited to, the following:

a. American Gypsum Co.
b. BPB America Inc.
c. G-P Gypsum.
d. Lafarge North America Inc.
e. National Gypsum Company.
f. PABCO Gypsum.
g. Temple.
h. USG Corporation.

2. Core: 1/2 inch, regular type.

B. Cementitious Backer Units: ANSI A118.9. For use behind ceramic tile.

1. Available Products: Subject to compliance with requirements, products that may be incorporated into the Work include, but are not limited to, the following:

a. Custom Building Products; Wonderboard.
b. FinPan, Inc.; Util-A-Crete Concrete Backer Board.
c. USG Corporation; DUROCK Cement Board.

2. Thickness: 1/2 inch.

2.4 TRIM ACCESSORIES

A. Interior Trim: ASTM C 1047.

1. Material: Galvanized or aluminum-coated steel sheet, rolled zinc, plastic, or paper-faced galvanized steel sheet.
2. Shapes:

   a. Cornerbead.

2.5 JOINT TREATMENT MATERIALS

A. General: Comply with ASTM C 475/C 475M.

B. Joint Tape:

1. Interior Gypsum Wallboard: Paper.
2. Tile Backing Panels: As recommended by panel manufacturer.

C. Joint Compound for Interior Gypsum Wallboard: For each coat use formulation that is compatible with other compounds applied on previous or for successive coats.

1. Prefilling: At open joints and damaged surface areas, use setting-type taping compound.
2. Embedding and First Coat: For embedding tape and first coat on joints, fasteners, and trim flanges, use drying-type, all-purpose compound.

   a. Use setting-type compound for installing paper-faced metal trim accessories.

3. Fill Coat: For second coat, use drying-type, all-purpose compound.
4. Finish Coat: For third coat, use drying-type, all-purpose compound.
5. Skim Coat: For final coat of Level 5 finish, use drying-type, all-purpose compound.

D. Joint Compound for Tile Backing Panels:

1. Water-Resistant Gypsum Backing Board: Use setting-type taping compound and setting-type, sandable topping compound.
2. Cementitious Backer Units: As recommended by backer unit manufacturer.

2.6 AUXILIARY MATERIALS

A. General: Provide auxiliary materials that comply with referenced installation standards and manufacturer's written recommendations.

B. Laminating Adhesive: Adhesive or joint compound recommended for directly adhering gypsum panels to continuous substrate.

C. Steel Drill Screws: ASTM C 1002, unless otherwise indicated.

1. Use screws complying with ASTM C 954 for fastening panels to steel members from 0.033 to 0.112 inch thick.
2. For fastening cementitious backer units, use screws of type and size recommended by panel manufacturer.

PART 3 - EXECUTION

3.1 EXAMINATION

A. Examine areas and substrates, with Installer present, and including welded hollow-metal frames and framing, for compliance with requirements and other conditions affecting performance.

B. Examine panels before installation. Reject panels that are wet, moisture damaged, and mold damaged.

C. Proceed with installation only after unsatisfactory conditions have been corrected.

3.2 APPLYING AND FINISHING PANELS, GENERAL

A. Comply with ASTM C 840.

B. Install ceiling panels across framing to minimize the number of abutting end joints and to avoid abutting end joints in central area of each ceiling. Stagger abutting end joints of adjacent panels not less than one framing member.

C. Install panels with face side out. Butt panels together for a light contact at edges and ends with not more than 1/16 inch of open space between panels. Do not force into place.

D. Locate edge and end joints over supports, except in ceiling applications where intermediate supports or gypsum board back-blocking is provided behind end joints. Do not place tapered edges against cut edges or ends. Stagger vertical joints on opposite sides of partitions. Do not make joints other than control joints at corners of framed openings.

E. Form control and expansion joints with space between edges of adjoining gypsum panels.

F. Cover both faces of support framing with gypsum panels in concealed spaces (above ceilings, etc.), except in chases braced internally.

1. Unless concealed application is indicated or required for sound, fire, air, or smoke ratings, coverage may be accomplished with scraps of not less than 8 sq. ft. in area.
2. Fit gypsum panels around ducts, pipes, and conduits.
3. Where partitions intersect structural members projecting below underside of floor/roof slabs and decks, cut gypsum panels to fit profile formed by structural members; allow 1/4- to 3/8-inch- wide joints to install sealant.

G. Isolate perimeter of gypsum board applied to non-load-bearing partitions at structural abutments, except floors. Provide 1/4- to 1/2-inch- wide spaces at these locations, and trim edges with edge trim where edges of panels are exposed. Seal joints between edges and abutting structural surfaces with acoustical sealant.

H. Attachment to Steel Framing: Attach panels so leading edge or end of each panel is attached to open (unsupported) edges of stud flanges first.

3.3 APPLYING INTERIOR GYPSUM BOARD

A. Install interior gypsum board in the following locations:

1. Regular Type: As indicated on Drawings.

B. Single-Layer Application:

1. On ceilings, apply gypsum panels before wall/partition board application to greatest extent possible and at right angles to framing, unless otherwise indicated.
2. On partitions/walls, apply gypsum panels vertically (parallel to framing), unless otherwise indicated or required by fire-resistance-rated assembly, and minimize end joints.

    a. Stagger abutting end joints not less than one framing member in alternate courses of panels.
    b. At stairwells and other high walls, install panels horizontally, unless otherwise indicated or required by fire-resistance-rated assembly.
3. Fastening Methods: Apply gypsum panels to supports with steel drill screws.

C. Laminating to Substrate: Where gypsum panels are indicated as directly adhered to a substrate (other than studs, joists, furring members, or base layer of gypsum board), comply with gypsum board manufacturer's written recommendations and temporarily brace or fasten gypsum panels until fastening adhesive has set.

3.4 APPLYING TILE BACKING PANELS

A. Water-Resistant Gypsum Backing Board: Install on walls and features in shower room and locations indicated to receive tile. Install with 1/4-inch gap where panels abut other construction or penetrations.

B. Cementitious Backer Units: ANSI A108.11, at locations indicated to receive tile.

C. Areas Not Subject to Wetting: Install regular-type gypsum wallboard panels to produce a flat surface except at showers, and other locations indicated to receive water-resistant panels.

D. Where tile backing panels abut other types of panels in same plane, shim surfaces to produce a uniform plane across panel surfaces.

3.5 INSTALLING TRIM ACCESSORIES

A. General: For trim with back flanges intended for fasteners, attach to framing with same fasteners used for panels. Otherwise, attach trim according to manufacturer's written instructions.

B. Interior Trim: Install in the following locations:

1. Cornerbead: Use at outside corners.
2. L-Bead: Use where indicated.

3.6 FINISHING GYPSUM BOARD

A. General: Treat gypsum board joints, interior angles, edge trim, control joints, penetrations, fastener heads, surface defects, and elsewhere as required to prepare gypsum board surfaces for decoration. Promptly remove residual joint compound from adjacent surfaces.

B. Prefill open joints and damaged surface areas.

C. Apply joint tape over gypsum board joints, except those with trim having flanges not intended for tape.

D. Gypsum Board Finish Levels: Finish panels to levels indicated below and according to ASTM C 840:

1. Level 1: Ceiling plenum areas, concealed areas, and where indicated.
2. Level 2: Panels that are substrate for tile.
3. Level 4: At panel surfaces that will be exposed to view, unless otherwise indicated.

a. Primer and its application to surfaces are specified in other Division 9 Sections.

E. Cementitious Backer Units: Finish according to manufacturer's written instructions.

3.7 PROTECTION

A. Protect installed products from damage from weather, condensation, direct sunlight, construction, and other causes during remainder of the construction period.

B. Remove and replace panels that are wet, moisture damaged, and mold damaged.

1. Indications that panels are wet or moisture damaged include, but are not limited to, discoloration, sagging, or irregular shape.
2. Indications that panels are mold damaged include, but are not limited to, fuzzy or splotchy surface contamination and discoloration.

END OF SECTION 092500

SECTION 102000 - LOUVERS AND VENTS

PART 1 - GENERAL

1.1 RELATED DOCUMENTS

A. Documents referred to the DC Government Bid Documents, which include the Solicitation Documents, Contract Sections, Contract Clauses, Special Contract Requirements and Standard Contract Provisions for Use With Specifications for District of Columbia Government Construction Projects (January 2007) are part hereof the same as if repeated herein.

1.2 SUMMARY

A. Section Includes:

1. Fixed, extruded-aluminum and formed-metal louvers.

2. Wall Vents (Brick Vents)

1.3 DEFINITIONS

A. Louver Terminology: Definitions of terms for metal louvers contained in AMCA 501 apply to this Section unless otherwise defined in this Section or in referenced standards.

B. Horizontal Louver: Louver with horizontal blades; i.e., the axes of the blades are horizontal.

C. Vertical Louver: Louver with vertical blades; i.e., the axes of the blades are vertical.

D. Drainable-Blade Louver: Louver with blades having gutters that collect water and drain it to channels in jambs and mullions, which carry it to bottom of unit and away from opening.

E. Storm-Resistant Louver: Louver that provides specified wind-driven rain performance, as determined by testing according to AMCA 500-L.

1.4 PERFORMANCE REQUIREMENTS

A. Structural Performance: Louvers shall withstand the effects of gravity loads and the following loads and stresses within limits and under conditions indicated without permanent deformation of louver components, noise or metal fatigue caused by louver

blade rattle or flutter, or permanent damage to fasteners and anchors. Wind pressures shall be considered to act normal to the face of the building.

1. Wind Loads: Determine loads based on pressures as indicated on Drawings.

B. Thermal Movements: Allow for thermal movements from ambient and surface temperature changes, without buckling, opening of joints, overstressing of components, failure of connections, or other detrimental effects.

1. Temperature Change (Range): 120 deg F, ambient; 180 deg F, material surfaces.

C. Louver Performance Ratings: Provide louvers complying with requirements specified, as demonstrated by testing manufacturer's stock units identical to those provided, except for length and width according to AMCA 500-L.

1.5 SUBMITTALS

A. Product Data: For each type of product indicated.

1. For louvers specified to bear AMCA seal, include printed catalog pages showing specified models with appropriate AMCA Certified Ratings Seals.

B. Shop Drawings: For louvers and accessories. Include plans, elevations, sections, details, and attachments to other work. Show frame profiles and blade profiles, angles, and spacing.

1. Show weep paths, gaskets, flashing, sealant, and other means of preventing water intrusion.
2. Show mullion profiles and locations.

C. Samples for Initial Selection: For units with factory-applied color finishes.

D. Samples for Verification: For each type of metal finish required.

E. Product Test Reports: Based on evaluation of comprehensive tests performed according to AMCA 500-L by a qualified testing agency or by manufacturer and witnessed by a qualified testing agency, for each type of louver and showing compliance with performance requirements specified.

1.6 QUALITY ASSURANCE

A. Source Limitations: Obtain louvers and vents from single source from a single manufacturer where indicated to be of same type, design, or factory-applied color finish.

B. Welding: Qualify procedures and personnel according to the following:

1. AWS D1.2/D1.2M, "Structural Welding Code - Aluminum."
2. AWS D1.3, "Structural Welding Code - Sheet Steel."
3. AWS D1.6, "Structural Welding Code - Stainless Steel."

C. SMACNA Standard: Comply with recommendations in SMACNA's "Architectural Sheet Metal Manual" for fabrication, construction details, and installation procedures.

D. UL and NEMA Compliance: Provide motors and related components for motor-operated louvers that are listed and labeled by UL and comply with applicable NEMA standards.

1.7 PROJECT CONDITIONS

A. Field Measurements: Verify actual dimensions of openings by field measurements before fabrication.

PART 2 - PRODUCTS

2.1 MATERIALS

A. Aluminum Extrusions: ASTM B 221, Alloy 6063-T5, T-52, or T6.

B. Aluminum Sheet: ASTM B 209, Alloy 3003 or 5005 with temper as required for forming, or as otherwise recommended by metal producer for required finish.

C. Aluminum Castings: ASTM B 26/B 26M, Alloy 319.

D. Fasteners: Use types and sizes to suit unit installation conditions.

1. Use hex-head or Phillips pan-head screws for exposed fasteners unless otherwise indicated.
2. For fastening aluminum, use aluminum or 300 series stainless-steel fasteners.
3. For fastening galvanized steel, use hot-dip-galvanized steel or 300 series stainless-steel fasteners.
4. For color-finished louvers, use fasteners with heads that match color of louvers.

E. Postinstalled Fasteners for Concrete and Masonry: Torque-controlled expansion anchors, made from stainless-steel components, with capability to sustain, without failure, a load equal to 4 times the loads imposed, for concrete, or 6 times the load imposed, for masonry, as determined by testing per ASTM E 488, conducted by a qualified independent testing agency.

F. Bituminous Paint: Cold-applied asphalt emulsion complying with ASTM D 1187.

2.2 FABRICATION, GENERAL

A. Assemble louvers in factory to minimize field splicing and assembly. Disassemble units as necessary for shipping and handling limitations. Clearly mark units for reassembly and coordinated installation.

B. Maintain equal louver blade spacing, including separation between blades and frames at head and sill, to produce uniform appearance.

C. Fabricate frames, including integral sills, to fit in openings of sizes indicated, with allowances made for fabrication and installation tolerances, adjoining material tolerances, and perimeter sealant joints.

1. Frame Type: Channel unless otherwise indicated.

D. Include supports, anchorages, and accessories required for complete assembly.

E. Provide vertical mullions of type and at spacings indicated, but not more than recommended by manufacturer, or 72 inches o.c., whichever is less.

1. Fully Recessed Mullions: Where indicated, provide mullions fully recessed behind louver blades. Where length of louver exceeds fabrication and handling limitations, fabricate with close-fitting blade splices designed to permit expansion and contraction.

F. Provide subsills made of same material as louvers or extended sills for recessed louvers.

G. Join frame members to each other and to fixed louver blades with fillet welds concealed from view unless otherwise indicated or size of louver assembly makes bolted connections between frame members necessary.

2.3 FIXED, FORMED-METAL LOUVERS

A. Horizontal, Drainable-Blade Louver:

1. Manufacturers: Subject to compliance with requirements, available manufacturers offering products that may be incorporated into the Work include, but are not limited to, the following:

a. Air Balance Inc.; a Mestek company.
b. Air Flow Company, Inc.
c. Airolite Company, LLC (The).
d. American Warming and Ventilating, Inc.; a Mestek company.
e. Arrow United Industries; a division of Mestek, Inc.
f. Cesco Products; a division of Mestek, Inc.
g. Construction Specialties, Inc.

h. Dowco Products Group; Safe-Air of Illinois, Inc.
i. Greenheck Fan Corporation.
j. Industrial Louvers, Inc.
k. Metal Form Manufacturing Inc.
l. NCA Manufacturing, Inc.
m. Ruskin Company; Tomkins PLC.
n. United Enertech Corp.
o. Vent Products Company, Inc.

2. Louver Depth: 4 inches.
3. Frame and Blade Material and Nominal Thickness: Galvanized-steel sheet, not less than 0.052 inch for frames and 0.040 inch for blades.
4. Mullion Type: Exposed.
5. Louver Performance Ratings:

a. Free Area: Not less than shown on drawings for mechanical equipment related louvers and 5.0 sq. ft. for attic louvers.
b. Air Performance: Not more than 0.10-inch wg static pressure drop at 600-fpm free-area exhaust and intake velocity.
c. Wind-Driven Rain Performance: Not less than 99 percent effectiveness when subjected to a rainfall rate of 3 inches per hour and a wind speed of 29 mph and 8 inches per hour and a wind speed of 50 mph for attic at a core-area intake velocity of 300 fpm.

6. AMCA Seal: Mark units with AMCA Certified Ratings Seal.

2.4 WALL VENTS (BRICK VENTS)

A. Extruded-Aluminum Wall Vents:

1. Manufacturers: Subject to compliance with requirements, available manufacturers offering products that may be incorporated into the Work include, but are not limited to, the following:

a. Air Flow Company, Inc.
b. Airolite Company, LLC (The).
c. Arrow United Industries; a division of Mestek, Inc.
d. Construction Specialties, Inc.
e. Dowco Products Group; Safe-Air of Illinois, Inc.
f. Greenheck Fan Corporation.
g. Hohmann & Barnard, Inc.
h. Industrial Louvers, Inc.
i. Louvers & Dampers, Inc.; a division of Mestek, Inc.
j. Metal Form Manufacturing Inc.
k. Nystrom Building Products.

l. Reliable Products, Inc.
m. Ruskin Company; Tomkins PLC.
n. Sunvent Industries; Division of Sylro Sales Corp.
o. United Enertech Corp.

2. Extruded-aluminum louvers and frames, not less than 0.125-inch nominal thickness, assembled by welding; with 18-by-14- mesh, aluminum insect screening on inside face; incorporating weep holes, continuous drip at sill, and integral waterstop on inside edge of sill; of load-bearing design and construction.
3. Dampers: Aluminum blades and frames mounted on inside of wall vents; operated from exterior with Allen wrench in socket-head cap screw. Fabricate operating mechanism from Type 304 stainless-steel components.

2.5 LOUVER SCREENS

A. General: Provide screen at fresh air intake/combustion air and natural ventilation louvers.

1. Screen Location for Fixed Louvers: Interior face.
2. Screening Type: Insect screening.

B. Secure screen frames to louver frames with stainless-steel machine screws, spaced a maximum of 6 inches from each corner and at 12 inches o.c.

C. Louver Screen Frames: Fabricate with mitered corners to louver sizes indicated.

1. Metal: Same kind and form of metal as indicated for louver to which screens are attached.
2. Finish: Mill finish unless otherwise indicated.
3. Type: Rewirable frames with a driven spline or insert.

D. Louver Screening for Aluminum Louvers:
1. Insect Screening: Stainless steel, mesh between ¼ and ½ inch spacing, 0.009-inch wire.

E. Louver Backing at Non-ducted Portions:

1. Galvanized Steel Sheet Metal: .032” thick.

2.6 FINISHES, GENERAL

A. Comply with NAAMM's "Metal Finishes Manual for Architectural and Metal Products" for recommendations for applying and designating finishes.

2.7 ALUMINUM FINISHES

A. Finish louvers after assembly.

B. Color Anodic Finish: AAMA 611, AA-M12C22A42/A44, Class I, 0.018 mm or thicker.
   1. Color: As selected by COTR from full range of industry colors and color densities.

C. Baked-Enamel or Powder-Coat Finish: AAMA 2603 except with a minimum dry film thickness of 1.5 mils. Comply with coating manufacturer's written instructions for cleaning, conversion coating, and applying and baking finish.
   1. Color and Gloss: As selected by COTR from manufacturer's full range.

2.8 GALVANIZED-STEEL SHEET FINISHES

A. Finish louvers after assembly.

B. Surface Preparation: Clean surfaces with nonpetroleum solvent so surfaces are free of oil and other contaminants. After cleaning, apply a conversion coating suited to the organic coating to be applied over it. Clean welds, mechanical connections, and abraded areas and repair according to ASTM A 780.

C. Baked-Enamel or Powder-Coat Finish: Immediately after cleaning and pretreating, apply manufacturer's standard 2-coat, baked-on finish consisting of prime coat and thermosetting topcoat, with a minimum dry film thickness of 1 mil for topcoat. Comply with coating manufacturer's written instructions for applying and baking to achieve a minimum dry film thickness of 2 mils.
   1. Color and Gloss: As selected by COTR from manufacturer's full range.

PART 3 - EXECUTION

3.1 EXAMINATION

A. Examine substrates and openings, with Installer present, for compliance with requirements for installation tolerances and other conditions affecting performance.

B. Proceed with installation only after unsatisfactory conditions have been corrected.

3.2 PREPARATION

A. Coordinate setting drawings, diagrams, templates, instructions, and directions for installation of anchorages that are to be embedded in concrete or masonry construction. Coordinate delivery of such items to Project site.

3.3 INSTALLATION

A. Locate and place louvers and vents level, plumb, and at indicated alignment with adjacent work.

B. Use concealed anchorages where possible. Provide brass or lead washers fitted to screws where required to protect metal surfaces and to make a weathertight connection. Anchor at masonry joints, not into brick or stone.

C. Form closely fitted joints with exposed connections accurately located and secured.

D. Provide perimeter reveals and openings of uniform width for sealants and joint fillers, as indicated.

E. Repair finishes damaged by cutting, welding, soldering, and grinding. Restore finishes so no evidence remains of corrective work. Return items that cannot be refinished in the field to the factory, make required alterations, and refinish entire unit or provide new units.

F. Protect unpainted galvanized and nonferrous-metal surfaces that will be in contact with concrete, masonry, or dissimilar metals from corrosion and galvanic action by applying a heavy coating of bituminous paint or by separating surfaces with waterproof gaskets or nonmetallic flashing.

G. Install concealed gaskets, flashings, joint fillers, and insulation as louver installation progresses, where weathertight louver joints are required. Comply with Division 7 Section "Joint Sealants" for sealants applied during louver installation.

3.4 ADJUSTING AND CLEANING

A. Test operation of adjustable louvers and adjust as needed to produce fully functioning units that comply with requirements.

B. Clean exposed surfaces of louvers and vents that are not protected by temporary covering, to remove fingerprints and soil during construction period. Do not let soil accumulate during construction period.

C. Before final inspection, clean exposed surfaces with water and a mild soap or detergent not harmful to finishes. Thoroughly rinse surfaces and dry.

D. Restore louvers and vents damaged during installation and construction so no evidence remains of corrective work. If results of restoration are unsuccessful, as determined by COTR, remove damaged units and replace with new units.

1. Touch up minor abrasions in finishes with air-dried coating that matches color and gloss of, and is compatible with, factory-applied finish coating.

END OF SECTION 102000

SECTION 105220 - FIRE EXTINGUISHER CABINETS

PART 1 - GENERAL

1.1 RELATED DOCUMENTS

A. Documents referred to the DC Government Bid Documents, which include the Solicitation Documents, Contract Sections, Contract Clauses, Special Contract Requirements and Standard Contract Provisions for Use With Specifications for District of Columbia Government Construction Projects (January 2007) are part hereof the same as if repeated herein.

1.2 SUMMARY

A. Section Includes:

1. Fire protection cabinet for portable fire extinguishers for new extinguisher in the Lobby Room 105.

B. Related Sections:

1. Division 10 Section "Fire Extinguishers."

1.3 SUBMITTALS

A. Product Data: For each type of product indicated. Include construction details, material descriptions, dimensions of individual components and profiles, and finishes for fire protection cabinets.

1. Fire Protection Cabinets: Include roughing-in dimensions, details showing mounting methods, relationships of box and trim to surrounding construction, door hardware, cabinet type, trim style, and panel style.

B. Shop Drawings: For fire protection cabinets. Include plans, elevations, sections, details, and attachments to other work.

C. Samples: For exposed cabinet finish.

D. Maintenance Data: For fire protection cabinets to include in maintenance manuals.

1.4 QUALITY ASSURANCE

A. Fire-Rated, Fire Protection Cabinets: Listed and labeled to comply with requirements in ASTM E 814 for fire-resistance rating of walls where they are installed.

PART 2 - PRODUCTS

2.1 MATERIALS

A. Aluminum: Alloy and temper recommended by aluminum producer and manufacturer for type of use and finish indicated, and as follows:

1. Sheet: ASTM B 209.
2. Extruded Shapes: ASTM B 221.

B. Tempered Float Glass: ASTM C 1048, Kind FT, Condition A, Type I, Quality q3, 3 mm thick, Class 1 (clear).

2.2 FIRE PROTECTION CABINET

A. Basis-of-Design Products:

1. The design for fire extinguisher cabinets is based on Vista Series by Larsen's Manufacturing company.

2. Subject to compliance with requirements, provide the named product or a comparable product by one of the following;

   a. J. L. Industries, Inc., a division of Activar Construction Products Group;.
   b. Potter Roemer LLC;.
   c. Watrous Division, American Specialties, Inc.;.

B. Cabinet Type: Suitable for fire extinguisher.

C. Cabinet Construction: Nonrated.

D. Cabinet Material: Aluminum sheet.

E. Surface-Mounted Cabinet: Cabinet box fully exposed and mounted directly on wall with no trim.

F. Door Material: Extruded-aluminum shapes.

G. Door Style: Frameless clear acrylic bubble.

H. Door Hardware: Manufacturer's standard door-operating hardware of proper type for cabinet type, trim style, and door material and style indicated.

1. Provide manufacturer's standard.
2. Provide continuous hinge, of same material and finish as trim, permitting door to open 180 degrees.

I. Accessories:

1. Mounting Bracket: Manufacturer's standard steel, designed to secure fire extinguisher to fire protection cabinet, of sizes required for types and capacities of fire extinguishers indicated, with plated or baked-enamel finish.
2. Identification: Lettering complying with authorities having jurisdiction for letter style, size, spacing, and location. Locate as directed by COTR.

a. Identify fire extinguisher in fire protection cabinet with the words "FIRE EXTINGUISHER."

1) Location: Applied to cabinet door.
2) Application Process: Pressure-sensitive vinyl letters.
3) Lettering Color: White.
4) Orientation: Vertical.

J. Finishes:

1. Aluminum: Class I, Clear anodic coating complying with AAMA 611.

2.3 FABRICATION

A. Fire Protection Cabinets: Provide manufacturer's standard box (tub) with trim, frame, door, and hardware to suit cabinet type, trim style, and door style indicated. Weld joints and grind smooth.

B. Cabinet Doors: Fabricate doors according to manufacturer's standards, from materials indicated and coordinated with cabinet types.

2.4 GENERAL FINISH REQUIREMENTS

A. Comply with NAAMM's "Metal Finishes Manual for Architectural and Metal Products" for recommendations for applying and designating finishes.

B. Protect mechanical finishes on exposed surfaces of fire protection cabinets from damage by applying a strippable, temporary protective covering before shipping.

C. Finish fire protection cabinets after assembly.

D. Appearance of Finished Work: Noticeable variations in same piece are not acceptable. Variations in appearance of adjoining components are acceptable if they are within the range of approved Samples and are assembled or installed to minimize contrast.

PART 3 - EXECUTION

3.1 EXAMINATION

A. Examine walls and partitions for suitable framing depth and blocking where semirecessed cabinets will be installed.

B. Proceed with installation only after unsatisfactory conditions have been corrected.

3.2 PREPARATION

A. Prepare recesses for semirecessed fire protection cabinets as required by type and size of cabinet and trim style.

3.3 INSTALLATION

A. General: Install fire protection cabinets in locations and at mounting heights indicated or, if not indicated, at heights acceptable to authorities having jurisdiction.

1. Fire Protection Cabinets: 54 inches above finished floor to top of cabinet.

B. Fire Protection Cabinets: Fasten cabinets to structure, square and plumb.

1. Unless otherwise indicated, provide recessed fire protection cabinets. If wall thickness is not adequate for recessed cabinets, provide semirecessed fire protection cabinets.
2. Provide inside latch and lock for break-glass panels.
3. Fasten mounting brackets to inside surface of fire protection cabinets, square and plumb.

C. Identification: Apply vinyl lettering at locations indicated.

3.4 ADJUSTING AND CLEANING

A. Remove temporary protective coverings and strippable films, if any, as fire protection cabinets are installed unless otherwise indicated in manufacturer's written installation instructions.

B. Adjust fire protection cabinet doors to operate easily without binding. Verify that integral locking devices operate properly.

C. On completion of fire protection cabinet installation, clean interior and exterior surfaces as recommended by manufacturer.

D. Touch up marred finishes, or replace fire protection cabinets that cannot be restored to factory-finished appearance. Use only materials and procedures recommended or furnished by fire protection cabinet and mounting bracket manufacturers.

E. Replace fire protection cabinets that have been damaged or have deteriorated beyond successful repair by finish touchup or similar minor repair procedures.

END OF SECTION 105220

SECTION 127021 – WOOD OFFICE FURNITURE

PART 1 - GENERAL

1.1 RELATED DOCUMENTS

A. Documents referred to the DC Government Bid Documents, which include the Solicitation Documents, Contract Sections, Contract Clauses, Special Contract Requirements and Standard Contract Provisions for Use With Specifications for District of Columbia Government Construction Projects (January 2007) are part hereof the same as if repeated herein.

1.2 SUMMARY

A. Section Includes: Wood Office Furniture

1. Work includes, but is not limited to, labor, equipment and material to provide and install wood furniture workstation in the reception area.

1.3 DEFINITIONS

A. General Services Administration (GSA)

B. American Society for Testing and Materials (ASTM)

E84 Standard Test Method for Surface Burning Characteristics of Building Materials

C. National Fire Protection Association (NFPA)

255 Standard Method of Test of Surface Burning Characteristics of Building Materials

D. Underwriters Laboratories Inc. (UL)

Listing 1286 Office Furnishings

E. ADA-ABA Accessibility Guidelines: U.S. Architectural & Transportation Barriers Compliance Board's "Americans with Disabilities Act (ADA) and Architectural Barriers Act (ABA) Accessibility Guidelines for Buildings and Facilities." Part II: ABA Application and Scoping.

F. American National Standards Institute (ANSI)

G. The Business and Institutional Furniture Manufacturer’s Association (BIFMA)

H. BOM: Bill of Materials

1.4 SUBMITTALS

A. Verification of manufacturer availability on the GSA schedule.

B. Product Data: For each type of product indicated.

C. Shop Drawings: Include dimensioned plans, elevations, sections, details, and attachments to other work, as necessary. Develop plans based on provided furniture schematic drawings.

1. Indicate minimum clearances, including ADA requirements.
2. Indicate all materials and equipment required to install reception workstation.
3. Workstation typicals with plan and isometric views for each.

D. Bills of Material

1. Provide total BOM for product purchase.
2. Provide BOM for each workstation typical.

E. Samples for Initial Selection: Provide samples for each type of exposed material, finish, covering, or facing indicated.

1. Provide full range of manufacturer's standard finishes available for selection by the end user.

F. Samples for Verification: Provide samples for each type of exposed material, finish, covering, or facing indicated.

1. Provide manufacturer's sample (largest size available) for each selected finish.

G. Operation and Maintenance Data: For wood office furniture workstations to include in maintenance manuals. In addition to items specified in Division 1 Section "Operation and Maintenance Data," include the following:

1. Panel finish facings and finishes for exposed trim and accessories. Include precautions for cleaning materials and methods that could be detrimental to finishes and performance.

H. Warranty

1.5 QUALITY ASSURANCE

A. Provide verification of all test data required by the GSA in the "Technical Requirements for Wood Executive Office Furniture" 3FNE 98-572D.

B. Installer Qualifications: The furniture installation contractor to use workers trained and approved by the manufacturer for this installation.

C. Fire-Test-Response Characteristics: Provide panels with finishes meeting one of the following as determined by testing identical products by UL or another testing and inspecting agency acceptable to authorities having jurisdiction:

1. Surface-Burning Characteristics: As determined by testing per ASTM E 84.

a. Flame-Spread Index: 25 feet or less.
b. Smoke-Developed Index: 450 or less.

2. Fire Growth Contribution: Meeting acceptance criteria of local code and authorities having jurisdiction when tested according to NFPA 255.

D. Electrical Fixtures, Devices and Accessories: Product shall meet the requirements of UL Standard 1286, as applicable.

E. Product shall meet the criteria of ANSI/BIFMA X5.5 “Desk Product Test” and ANSI/BIFMA X5.2 “Lateral File Test”.

F. Pre-installation Conference: Conduct conference at Project site.

1.6 DELIVERY, STORAGE, AND HANDLING

A. Product may be delivered directly to site for staging. Remove all product packaging and trash. Check packaging lists against BOMs for confirmation of correct items, quantities and shipping damage. Provide floor and wall protection during delivery.

B. Product may be delivered to offsite warehouse for storage and staging. Storage may be required if site construction is not complete at time of delivery from manufacturer. Check packaging lists against BOMs for confirmation of correct items, quantities and shipping damage. Provide floor and wall protection during delivery to site.

1.7 PROJECT CONDITIONS

A. Field Measurements: Verify actual dimensions of field conditions prior to installation of workstations.

1.8 WARRANTY

1. Special Warranty: Manufacturer's standard form in which manufacturer agrees to repair or replace components of wood office furniture workstations that fail in materials or workmanship within specified warranty period as required in the GSA Contract.

PART 2 - PRODUCTS

2.1 WOOD OFFICE FURNITURE

A. Wood Office Furniture: This description covers freestanding wood office furniture with various components designed to be individual furniture pieces and provide the modularity for "L" shaped desk with storage option. Product lines for consideration shall be on GSA schedule.

1. Basis-of-Design Product: Subject to compliance with requirements, provide Magnusson by Knoll, Inc. GSA Schedule #: GS-28F-8029H, or comparable product by one of the following, or equal:

a. Steelcase, Inc., Walden product line, GSA Schedule #: GS-28F-0014T
b. The Gunlocke Company L.L.C., Mosaic 2 product line, GSA Schedule #: GS-28F-2151D
c. Kimball International, Inc., Prevail product line, GSA Schedule #: GS-29F-0177G

B. Furniture Construction: All work surfaces and support panels shall incorporate natural wood veneer over a particle board substrate. All desk, return, credenza and bridge tops shall be a minimum of 1 ¼" thick. Work surface shall have a sculpted solid wood edge. The work surfaces shall have grommets for wire management. Drawers shall have a wood or metal interior. Box drawers shall operate on three quarter extension metal suspensions. File drawers operate on three-part, full extension metal suspensions. All suspensions operate on steel ball bearings.

C. All components shall be available in a variety of sizes, storage options and configurations. Modesty panels shall be standard on the product line. Components include the following:

1. Wood Desk, 72" W x 30" D, two grommets; provide modesty panel and mobile pedestal box/box/file.
2. Wood Bridge, 42" W x 18' D, one grommet; provide modesty panel and end support.

D. A variety of wood finish selections shall be available to match a "Clear Maple" finish.

E. Electrical: Each work surface shall have a minimum of one grommet for power cord routing.

F. All locks in one workstation to be keyed alike.

PART 3 - EXECUTION

3.1 EXAMINATION

A. Examine floors and conditions for compliance with requirements, installation tolerances and other conditions affecting performance of furniture.

B. Proceed with installation only after unsatisfactory conditions have been corrected.

3.2 INSTALLATION

A. General: Install furniture in accordance with manufacturer's written installation instructions and contract documents.

B. Install furniture only after other finishing operations such as painting (including punch list items located behind or under the furniture), have been completed.

C. Furniture shall be leveled with integral, concealed adjustable devices with an optimum ¼" between desk base and finish floor.

D. Keep furniture assembly areas and egress paths clear of boxes, parts and debris. Do not block building exits or exit corridors. Remove trash daily to avoid trip hazards and fire potential.

E. Protect all existing site landscaping, building wall finishes and flooring from damage during the furniture installation. Repair or replace items damaged during the furniture installation.

3.3 ADJUSTING

A. Adjust operable furniture components, such as drawers and doors, to operate smoothly.

B. Adjust all storage components, work surfaces and accessories to be flush and aligned.

3.4 CLEANING

A. Clean soiled surfaces of furniture to remove dust, loose fibers, fingerprints, adhesives, and other foreign materials according to manufacturer's written instructions.

3.5 TOUCH UP

A. Using a touch up kit from the manufacturer, touch up any slight damage to the visible finished surfaces on the furniture, as necessary.

END OF SECTION 127021

SECTION 127031 – LATERAL FILE CABINETS

PART 1 - GENERAL

1.1 RELATED DOCUMENTS

A. Documents referred to the DC Government Bid Documents, which include the Solicitation Documents, Contract Sections, Contract Clauses, Special Contract Requirements and Standard Contract Provisions for Use With Specifications for District of Columbia Government Construction Projects (January 2007) are part hereof the same as if repeated herein.

1.2 SUMMARY

A. Section Includes: Lateral file cabinets

1. Work includes, but is not limited to, labor, equipment and material to provide and install lateral file cabinets.

1.3 DEFINITIONS

A. General Services Administration (GSA)

B. American Society for Testing and Materials (ASTM)

E84 Standard Test Method for Surface Burning Characteristics of Building Materials

C. National Fire Protection Association (NFPA)

255 Standard Method of Test of Surface Burning Characteristics of Building Materials

D. Underwriters Laboratories Inc. (UL)

Listing 1286 Office Furnishings

E. ADA-ABA Accessibility Guidelines: U.S. Architectural & Transportation Barriers Compliance Board's "Americans with Disabilities Act (ADA) and Architectural Barriers Act (ABA) Accessibility Guidelines for Buildings and Facilities." Part II: ABA Application and Scoping.

F. American National Standards Institute (ANSI)

G. The Business and Institutional Furniture Manufacturer’s Association (BIFMA)

H. BOM: Bill of Materials

1.4 SUBMITTALS

A. Verification of manufacturer availability on the GSA schedule.

B. Product Data: Provide product data for each type of product indicated.

C. Shop Drawings: Include dimensioned plans, elevations, sections, details, and attachments to other work, as necessary. Develop plans based on provided furniture schematic drawings.

1. Indicate minimum clearances, including ADA requirements.
2. Indicate all materials and equipment required to install file cabinets.

D. Bills of Material: Provide total BOM for product purchase.

E. Samples for Initial Selection: Provide samples for each type of exposed material, finish, covering, or facing indicated.

1. Provide full range of manufacturer's standard finishes available for selection by the end user.

F. Samples for Verification: Provide samples for each type of exposed material, finish, covering, or facing indicated.

1. Provide manufacturer's sample (largest size available) for each selected finish.

G. Operation and Maintenance Data: For lateral file cabinets to include in maintenance manuals. In addition to items specified in Division 1 Section "Operation and Maintenance Data," include the following:

1. Include precautions for cleaning materials and methods that could be detrimental to finishes and performance.

H. Warranty

1.5 QUALITY ASSURANCE

A. Provide verification of all test data required by the GSA in the "Commercial Item Description File Cabinets, Lateral and Shelf Files, Steel" A-A-3187A.

B. Installer Qualifications: The furniture installation contractor must use workers trained and approved by the manufacturer for this installation.

C. Fire-Test-Response Characteristics: Provide panels with finishes meeting one of the following as determined by testing identical products by UL or another testing and inspecting agency acceptable to authorities having jurisdiction:

1. Surface-Burning Characteristics: As determined by testing per ASTM E 84.

   a. Flame-Spread Index: 25 feet or less.
   b. Smoke-Developed Index: 450 or less.

2. Fire Growth Contribution: Meeting acceptance criteria of local code and authorities having jurisdiction when tested according to NFPA 255.

D. Lateral file cabinets: Product shall meet the criteria of ANSI/BIFMA X5.3 "American National Standards for Office Furnishings – Vertical Files" and ANSI BIFMA X5.9 "Storage Units".

E. Pre-installation Conference: Conduct conference at Project site.

1.6 DELIVERY, STORAGE, AND HANDLING

A. Product may be delivered directly to site for staging. All product packaging and trash removal to be the responsibility of the installer. Installer to check packaging lists against BOMs for confirmation of correct items, quantities and shipping damage. Installer shall provide floor and wall protection during delivery.

B. Product may be delivered to installer's warehouse for storage and staging. Storage may be required if site construction is not complete at time of delivery from manufacturer. Installer to check packaging lists against BOMs for confirmation of correct items, quantities and shipping damage. Installer shall provide floor and wall protection during delivery to site. Storage and shipping costs to be line items on bid.

1.7 PROJECT CONDITIONS

A. Field Measurements: Verify actual dimensions of field conditions prior to installation of lateral file cabinets.

1.8 WARRANTY

1. Special Warranty: Manufacturer's standard form in which manufacturer agrees to repair or replace components of lateral file cabinets that fail in materials or workmanship within specified warranty period as required in the GSA Contract.

PART 2 - PRODUCTS

2.1 LATERAL FILE CABINETS

A. Lateral File Cabinets: This description covers file cabinets with lateral drawers, as described in the GSA "Commercial Item Description File Cabinets, Lateral and Shelf Files, Steel" A-A-3187A.. Product lines for consideration shall be on GSA schedule.

1. Basis-of-Design Product: Subject to compliance with requirements, provide Calibre by Knoll, Inc. GSA Schedule #: GS-28F-8029H, or comparable product by one of the following, or equal:

a. GF Office Furniture, Ltd., Quantum product line, GSA Schedule #: GS-28F-8050H

b. Steelcase, Inc., 900 Series product line, GSA Schedule #: GS-28F-0014T

B. Size: 5-Drawer lateral file, 36" wide.

1. File location is in Room 105D. Verify width of space to be located, and access to space, to make sure file can be moved into place without damaging file or walls.

C. Lateral File Construction: Cabinet case construction shall be welded or the best commercial practice of the manufacturer with a steel top, side panels, back panel and full bottom. Roll out drawers shall be mounted on ball bearing suspensions with interlocking devices preventing the operation of more than one drawer at a time. The 5 drawer lateral file shall hold four fixed front drawers and the top shelf shall have a receding door, unless another configuration is requested by the end user. The cabinet shall have four glides adjustable by hand. Provide label holders for each cabinet. Provide ganging devices for side by side locations, if requested by end user. Provide lock and key to match reception desk locks if possible. Manufacturer shall have 36" wide cabinet standard on product line.

PART 3 - EXECUTION

3.1 EXAMINATION

A. Examine floors and conditions for compliance with requirements, installation tolerances and other conditions affecting performance of lateral file cabinets.

B. Proceed with installation only after unsatisfactory conditions have been corrected.

3.2 INSTALLATION

A. General: Install lateral file cabinets in accordance with manufacturer's written installation instructions and contract documents.

B. Install lateral file cabinets only after other finishing operations such as painting (including punch list items located behind or under the furniture), have been completed.

C. Keep furniture assembly areas and egress paths clear of boxes, parts and debris. Do not block building exits or exit corridors. Remove trash daily to avoid trip hazards and fire potential.

D. Protect all existing site landscaping, building wall finishes and flooring from damage during the furniture installation. Repair or replace items damaged during the furniture installation.

3.3 ADJUSTING

A. Adjust glides to correct level allowing for smooth drawer operation.

B. Adjust lateral file cabinet drawers and locks to operate smoothly.

3.4 CLEANING

A. Clean soiled surfaces of systems furniture to remove dust, loose fibers, fingerprints, adhesives, and other foreign materials according to manufacturer's written instructions.

3.5 TOUCH UP

A. Using a touch up paint kit from the manufacturer, touch up any damage to the visible painted surfaces on the furniture, as necessary.

END OF SECTION 127031

[This page intentionally left blank.]

SECTION 127041 – DESK CHAIRS

PART 1 - GENERAL

1.1 RELATED DOCUMENTS

A. Documents referred to the DC Government Bid Documents, which include the Solicitation Documents, Contract Sections, Contract Clauses, Special Contract Requirements and Standard Contract Provisions for Use With Specifications for District of Columbia Government Construction Projects (January 2007) are part hereof the same as if repeated herein.

1.2 SUMMARY

A. Section Includes: Desk Chairs

1. Work includes, but is not limited to, labor, equipment and material to provide and install desk chair at reception desk work station.

1.3 DEFINITIONS

A. General Services Administration (GSA)

B. American Society for Testing and Materials (ASTM)

E84 Standard Test Method for Surface Burning Characteristics of Building Materials

C. National Fire Protection Association (NFPA)

255 Standard Method of Test of Surface Burning Characteristics of Building Materials

701 Fire Tests for Flame-Resistant Textiles and Films

D. Underwriters Laboratories Inc. (UL)

Listing 1286 Office Furnishings

E. ADA-ABA Accessibility Guidelines: U.S. Architectural & Transportation Barriers Compliance Board's "Americans with Disabilities Act (ADA) and Architectural Barriers Act (ABA) Accessibility Guidelines for Buildings and Facilities." Part II: ABA Application and Scoping.

F. American National Standards Institute (ANSI)

G. The Business and Institutional Furniture Manufacturer's Association (BIFMA)

H. BOM: Bill of Materials

1.4 SUBMITTALS

A. Verification of manufacturer availability on the GSA schedule.

B. Product Data: Provide product data for each type of product indicated.

C. Shop Drawings: Include dimensioned plans, elevations, sections, details, and attachments to other work, as necessary. Develop plans based on provided furniture schematic drawings.

1. Indicate minimum clearances, including ADA requirements.
2. Indicate all materials required to install desk chairs.

D. Bills of Material: Provide total BOM for product purchase.

E. Samples for Initial Selection: Provide samples for each type of exposed material, finish, covering, or facing indicated.

1. Provide full range of manufacturer's standard finishes available for selection by the end user.

F. Samples for Verification: Provide samples for each type of exposed material, finish, covering, or facing indicated.

1. Provide manufacturer's sample (largest available) for each selected finish.

G. Operation and Maintenance Data: For desk chairs to include in maintenance manuals. In addition to items specified in Division 1 Section "Operation and Maintenance Data," include the following:

1. Include precautions for cleaning materials and methods that could be detrimental to finishes and performance.

2. Provide adjustments instruction manual, one per chair.

H. Warranty

1.5 QUALITY ASSURANCE

A. Installer Qualifications: The furniture installation contractor to use workers trained and approved by the manufacturer for this installation.

B. Fire-Test-Response Characteristics: Provide panels with finishes meeting one of the following as determined by testing identical products by UL or another testing and inspecting agency acceptable to authorities having jurisdiction:

1. Surface-Burning Characteristics: As determined by testing per ASTM E 84 and complies with NFPA 701.

   a. Flame-Spread Index: 25 feet or less.
   b. Smoke-Developed Index: 450 or less.

2. Fire Growth Contribution: Meeting acceptance criteria of local code and authorities having jurisdiction when tested according to NFPA 255.

C. Desk Chairs: Product shall meet the criteria of ANSI/BIFMA X5.1 "American National Standards for Office Furnishings – General Purpose Chairs".

D. Pre-installation Conference: Conduct conference at Project site.

1.6 DELIVERY, STORAGE, AND HANDLING

A. Product may be delivered directly to site for staging. All product packaging and trash removal to be the responsibility of the installer. Installer to check packaging lists against BOMs for confirmation of correct items, quantities and shipping damage. Installer shall provide floor and wall protection during delivery.

B. Product may be delivered to installer's warehouse for storage and staging. Storage may be required if site construction is not complete at time of delivery from manufacturer. Installer to check packaging lists against BOMs for confirmation of correct items, quantities and shipping damage. Installer shall provide floor and wall protection during delivery to site. Storage and shipping costs to be line items on bid.

1.7 WARRANTY

1. Special Warranty: Manufacturer's standard form in which manufacturer agrees to repair or replace components of desk chairs that fail in materials or workmanship within specified warranty period as required in the GSA Contract.

PART 2 - PRODUCTS

2.1 DESK CHAIRS

A. Desk Chairs: This description covers ergonomic desk chairs as described in the ANSI/BIFMA X5.1 and ANSI/BIFMA Ergonomic Guidelines G1-2002.

1. Basis-of-Design Product: Subject to compliance with requirements, provide Life by Knoll, Inc. GSA Schedule #: GS-28F-8029H, or comparable product by one of the following or equal:

    a. Steelcase, Inc., Jersey or Think product line, GSA Schedule #: GS-28F-0014T
    b. Kimball International, Inc., Skye product line, GSA Schedule #: GS-29F-0177G

B. Desk Chair Construction: The product shall be an ergonomic desk chair with mesh back and multiple adjustments for comfort. A variety of options for arm, cushion, adjustments and finishes shall be made available for selection by the end user.

PART 3 - EXECUTION

3.1 EXAMINATION

A. Examine floors and conditions for compliance with requirements, installation tolerances and other conditions affecting performance of desk chairs.

B. Proceed with installation only after unsatisfactory conditions have been corrected.

3.2 INSTALLATION

A. General: Install desk chairs in accordance with manufacturer's written installation instructions and contract documents.

B. Install desk chairs only after other finishing operations such as painting (including punch list items located behind or under the furniture), have been completed. Chairs shall be placed in workstations after all work has been completed on the systems furniture.

C. Keep furniture assembly areas and egress paths clear of boxes, parts and debris. Do not block building exits or exit corridors. Remove trash daily to avoid trip hazards and fire potential.

D. Protect all existing site landscaping, building wall finishes and flooring from damage during the furniture installation. Repair or replace items damaged during the furniture installation.

3.3 ADJUSTING

A. Adjust desk chairs to confirm all controls work and operate smoothly.

END OF SECTION 127041

SECTION 233113 - METAL DUCTS

PART 1 - GENERAL

1.1 RELATED DOCUMENTS

A. Drawings and general provisions of the Contract, including General and Supplementary Conditions and Division 01 Specification Sections, apply to this Section.

B. Documents referred to in **Section C** of the BID DOCUMENTS are part hereof the same as if repeated herein.

1.2 SUMMARY

A. Section Includes:

1. Rectangular ducts and fittings.
2. Round ducts and fittings.
3. Sheet metal materials.
4. Sealants and gaskets.
5. Hangers and supports.
6. Seismic-restraint devices.

B. Related Sections:

1. Division 23 Section "Testing, Adjusting, and Balancing for HVAC" for testing, adjusting, and balancing requirements for metal ducts.

1.3 PERFORMANCE REQUIREMENTS

A. Delegated Duct Design: Duct construction, including sheet metal thicknesses, seam and joint construction, reinforcements, and hangers and supports, shall comply with SMACNA's "HVAC Duct Construction Standards - Metal and Flexible" and performance requirements and design criteria indicated in "Duct Schedule" Article.

B. Airstream Surfaces: Surfaces in contact with the airstream shall comply with requirements in ASHRAE 62.1.

1.4 SUBMITTALS

A. Product Data: For each type of product indicated.

B. Shop Drawings:

1. Fabrication, assembly, and installation, including plans, elevations, sections, components, and attachments to other work.
2. Factory- and shop-fabricated ducts and fittings.
3. Duct layout indicating sizes, configuration, and static-pressure classes.
4. Elevation of top of ducts.
5. Dimensions of main duct runs from building grid lines.
6. Fittings.
7. Reinforcement and spacing.
8. Seam and joint construction.
9. Penetrations through fire-rated and other partitions.
10. Equipment installation based on equipment being used on Project.
11. Locations for duct accessories, including dampers, turning vanes, and access doors and panels.
12. Hangers and supports, including methods for duct and building attachment and vibration isolation.

C. Delegated-Design Submittal:

1. Sheet metal thicknesses.
2. Joint and seam construction and sealing.
3. Reinforcement details and spacing.
4. Materials, fabrication, assembly, and spacing of hangers and supports.

D. Welding certificates.

1.5 QUALITY ASSURANCE

A. Welding Qualifications: Qualify procedures and personnel according to AWS D1.1/D1.1M, "Structural Welding Code - Steel," for hangers and supports. AWS D1.2/D1.2M, "Structural Welding Code - Aluminum," for aluminum supports. AWS D9.1M/D9.1, "Sheet Metal Welding Code," for duct joint and seam welding.]Welding Qualifications: Qualify procedures and personnel according to the following:

1. AWS D1.1/D1.1M, "Structural Welding Code - Steel," for hangers and supports.
2. AWS D1.2/D1.2M, "Structural Welding Code - Aluminum," for aluminum supports.
3. AWS D9.1M/D9.1, "Sheet Metal Welding Code," for duct joint and seam welding.

B. ASHRAE Compliance: Applicable requirements in ASHRAE 62.1, Section 5 - "Systems and Equipment" and Section 7 - "Construction and System Start-Up."

C. ASHRAE/IESNA Compliance: Applicable requirements in ASHRAE/IESNA 90.1, Section 6.4.4 - "HVAC System Construction and Insulation."

PART 2 - PRODUCTS

2.1 RECTANGULAR DUCTS AND FITTINGS

A. General Fabrication Requirements: Comply with SMACNA's "HVAC Duct Construction Standards - Metal and Flexible" based on indicated static-pressure class unless otherwise indicated.

B. Transverse Joints: Select joint types and fabricate according to SMACNA's "HVAC Duct Construction Standards - Metal and Flexible," Figure 2-1, "Rectangular Duct/Transverse Joints," for static-pressure class, applicable sealing requirements, materials involved, duct-support intervals, and other provisions in SMACNA's "HVAC Duct Construction Standards - Metal and Flexible."

C. Longitudinal Seams: Select seam types and fabricate according to SMACNA's "HVAC Duct Construction Standards - Metal and Flexible," Figure 2-2, "Rectangular Duct/Longitudinal Seams," for static-pressure class, applicable sealing requirements, materials involved, duct-support intervals, and other provisions in SMACNA's "HVAC Duct Construction Standards - Metal and Flexible."

D. Elbows, Transitions, Offsets, Branch Connections, and Other Duct Construction: Select types and fabricate according to SMACNA's "HVAC Duct Construction Standards - Metal and Flexible," Chapter 4, "Fittings and Other Construction," for static-pressure class, applicable sealing requirements, materials involved, duct-support intervals, and other provisions in SMACNA's "HVAC Duct Construction Standards - Metal and Flexible."

2.2 ROUND DUCTS AND FITTINGS

A. General Fabrication Requirements: Comply with SMACNA's "HVAC Duct Construction Standards - Metal and Flexible," Chapter 3, "Round, Oval, and Flexible Duct," based on indicated static-pressure class unless otherwise indicated.

1. Manufacturers: Subject to compliance with requirements, available manufacturers offering products that may be incorporated into the Work include, but are not limited to, the following:

   a. Lindab Inc.
   b. McGill AirFlow LLC.
   c. SEMCO Incorporated.
   d. Sheet Metal Connectors, Inc.

e. Spiral Manufacturing Co., Inc.

B. Transverse Joints: Select joint types and fabricate according to SMACNA's "HVAC Duct Construction Standards - Metal and Flexible," Figure 3-1, "Round Duct Transverse Joints," for static-pressure class, applicable sealing requirements, materials involved, duct-support intervals, and other provisions in SMACNA's "HVAC Duct Construction Standards - Metal and Flexible."

1. Transverse Joints in Ducts Larger Than 60 Inches (1524 mm) > in Diameter: Flanged.

C. Longitudinal Seams: Select seam types and fabricate according to SMACNA's "HVAC Duct Construction Standards - Metal and Flexible," Figure 3-2, "Round Duct Longitudinal Seams," for static-pressure class, applicable sealing requirements, materials involved, duct-support intervals, and other provisions in SMACNA's "HVAC Duct Construction Standards - Metal and Flexible."

1. Fabricate round ducts larger Than 90 inches (2286 mm) in diameter with butt-welded longitudinal seams.

D. Tees and Laterals: Select types and fabricate according to SMACNA's "HVAC Duct Construction Standards - Metal and Flexible," Figure 3-5, "90 Degree Tees and Laterals," and Figure 3-6, "Conical Tees," for static-pressure class, applicable sealing requirements, materials involved, duct-support intervals, and other provisions in SMACNA's "HVAC Duct Construction Standards - Metal and Flexible."

2.3 SHEET METAL MATERIALS

A. General Material Requirements: Comply with SMACNA's "HVAC Duct Construction Standards - Metal and Flexible" for acceptable materials, material thicknesses, and duct construction methods unless otherwise indicated. Sheet metal materials shall be free of pitting, seam marks, roller marks, stains, discolorations, and other imperfections.

B. Galvanized Sheet Steel: Comply with ASTM A 653/A 653M.

1. Galvanized Coating Designation: G60 (Z180).
2. Finishes for Surfaces Exposed to View: Mill phosphatized.

C. Carbon-Steel Sheets: Comply with ASTM A 1008/A 1008M, with oiled, matte finish for exposed ducts.

D. Stainless-Steel Sheets: Comply with ASTM A 480/A 480M, Type 304 or 316, as indicated in the "Duct Schedule" Article; cold rolled, annealed, sheet. Exposed surface finish shall be No. 2B, No. 2D, No. 3, or No. 4 as indicated in the "Duct Schedule" Article.

E. Aluminum Sheets: Comply with ASTM B 209 (ASTM B 209M) Alloy 3003, H14 temper; with mill finish for concealed ducts, and standard, one-side bright finish for duct surfaces exposed to view.

F. Reinforcement Shapes and Plates: ASTM A 36/A 36M, steel plates, shapes, and bars; black and galvanized.

1. Where black- and galvanized-steel shapes and plates are used to reinforce aluminum ducts, isolate the different metals with butyl rubber, neoprene, or EPDM gasket materials.

G. Tie Rods: Galvanized steel, 1/4-inch (6-mm) minimum diameter for lengths 36 inches (900 mm) or less; 3/8-inch (10-mm) minimum diameter for lengths longer than 36 inches (900 mm).

2.4 SEALANT AND GASKETS

A. General Sealant and Gasket Requirements: Surface-burning characteristics for sealants and gaskets shall be a maximum flame-spread index of 25 and a maximum smoke-developed index of 50 when tested according to UL 723; certified by an NRTL.

B. Two-Part Tape Sealing System:

1. Tape: Woven cotton fiber impregnated with mineral gypsum and modified acrylic/silicone activator to react exothermically with tape to form hard, durable, airtight seal.
2. Tape Width: 3 inches (76 mm).
3. Sealant: Modified styrene acrylic.
4. Water resistant.
5. Mold and mildew resistant.
6. Maximum Static-Pressure Class: 10-inch wg (2500 Pa), positive and negative.
7. Service: Indoor and outdoor.
8. Service Temperature: Minus 40 to plus 200 deg F (Minus 40 to plus 93 deg C).
9. Substrate: Compatible with galvanized sheet steel (both PVC coated and bare), stainless steel, or aluminum.
10. For indoor applications, use sealant that has a VOC content of 250 g/L or less when calculated according to 40 CFR 59, Subpart D (EPA Method 24).
11. Sealant shall comply with the testing and product requirements of the California Department of Health Services' "Standard Practice for the Testing of Volatile Organic Emissions from Various Sources Using Small-Scale Environmental Chambers."

C. Water-Based Joint and Seam Sealant:

1. Application Method: Brush on.
2. Solids Content: Minimum 65 percent.

3. Shore A Hardness: Minimum 20.
4. Water resistant.
5. Mold and mildew resistant.
6. VOC: Maximum 75 g/L (less water).
7. Maximum Static-Pressure Class: 10-inch wg (2500 Pa), positive and negative.
8. Service: Indoor or outdoor.
9. Substrate: Compatible with galvanized sheet steel (both PVC coated and bare), stainless steel, or aluminum sheets.

D. Flanged Joint Sealant: Comply with ASTM C 920.

1. General: Single-component, acid-curing, silicone, elastomeric.
2. Type: S.
3. Grade: NS.
4. Class: 25.
5. Use: O.
6. For indoor applications, use sealant that has a VOC content of 250 g/L or less when calculated according to 40 CFR 59, Subpart D (EPA Method 24).
7. Sealant shall comply with the testing and product requirements of the California Department of Health Services' "Standard Practice for the Testing of Volatile Organic Emissions from Various Sources Using Small-Scale Environmental Chambers."

E. Flange Gaskets: Butyl rubber, neoprene, or EPDM polymer with polyisobutylene plasticizer.

F. Round Duct Joint O-Ring Seals:

1. Seal shall provide maximum leakage class of 3 cfm/100 sq. ft. at 1-inch wg (0.14 L/s per sq. m at 250 Pa) and shall be rated for 10-inch wg (2500-Pa) static-pressure class, positive or negative.
2. EPDM O-ring to seal in concave bead in coupling or fitting spigot.
3. Double-lipped, EPDM O-ring seal, mechanically fastened to factory-fabricated couplings and fitting spigots.

2.5 HANGERS AND SUPPORTS

A. Hanger Rods for Noncorrosive Environments: Cadmium-plated steel rods and nuts.

B. Hanger Rods for Corrosive Environments: Electrogalvanized, all-thread rods or galvanized rods with threads painted with zinc-chromate primer after installation.

C. Strap and Rod Sizes: Comply with SMACNA's "HVAC Duct Construction Standards - Metal and Flexible," Table 5-1 (Table 5-1M), "Rectangular Duct Hangers Minimum Size," and Table 5-2, "Minimum Hanger Sizes for Round Duct."

D. Steel Cables for Galvanized-Steel Ducts: Galvanized steel complying with ASTM A 603.

E. Steel Cables for Stainless-Steel Ducts: Stainless steel complying with ASTM A 492.

F. Steel Cable End Connections: Cadmium-plated steel assemblies with brackets, swivel, and bolts designed for duct hanger service; with an automatic-locking and clamping device.

G. Duct Attachments: Sheet metal screws, blind rivets, or self-tapping metal screws; compatible with duct materials.

H. Trapeze and Riser Supports:

1. Supports for Galvanized-Steel Ducts: Galvanized-steel shapes and plates.
2. Supports for Stainless-Steel Ducts: Stainless-steel shapes and plates.
3. Supports for Aluminum Ducts: Aluminum or galvanized steel coated with zinc chromate.

PART 3 - EXECUTION

3.1 DUCT INSTALLATION

A. Drawing plans, schematics, and diagrams indicate general location and arrangement of duct system. Indicated duct locations, configurations, and arrangements were used to size ducts and calculate friction loss for air-handling equipment sizing and for other design considerations. Install duct systems as indicated unless deviations to layout are approved on Shop Drawings and Coordination Drawings.

B. Install ducts according to SMACNA's "HVAC Duct Construction Standards - Metal and Flexible" unless otherwise indicated.

C. Install round ducts in maximum practical lengths.

D. Install ducts with fewest possible joints.

E. Install factory- or shop-fabricated fittings for changes in direction, size, and shape and for branch connections.

F. Unless otherwise indicated, install ducts vertically and horizontally, and parallel and perpendicular to building lines.

G. Install ducts close to walls, overhead construction, columns, and other structural and permanent enclosure elements of building.

H. Install ducts with a clearance of 1 inch (25 mm), plus allowance for insulation thickness.

I. Route ducts to avoid passing through transformer vaults and electrical equipment rooms and enclosures.

J. Where ducts pass through non-fire-rated interior partitions and exterior walls and are exposed to view, cover the opening between the partition and duct or duct insulation with sheet metal flanges of same metal thickness as the duct. Overlap openings on four sides by at least 1-1/2 inches (38 mm).

K. Where ducts pass through fire-rated interior partitions and exterior walls, install fire dampers. Comply with requirements in Division 23 Section "Air Duct Accessories" for fire and smoke dampers.

L. Protect duct interiors from moisture, construction debris and dust, and other foreign materials. Comply with SMACNA's "IAQ Guidelines for Occupied Buildings Under Construction," Appendix G, "Duct Cleanliness for New Construction Guidelines."

3.2 INSTALLATION OF EXPOSED DUCTWORK

A. Protect ducts exposed in finished spaces from being dented, scratched, or damaged.

B. Trim duct sealants flush with metal. Create a smooth and uniform exposed bead. Do not use two-part tape sealing system.

C. Grind welds to provide smooth surface free of burrs, sharp edges, and weld splatter. When welding stainless steel with a No. 3 or 4 finish, grind the welds flush, polish the exposed welds, and treat the welds to remove discoloration caused by welding.

D. Maintain consistency, symmetry, and uniformity in the arrangement and fabrication of fittings, hangers and supports, duct accessories, and air outlets.

E. Repair or replace damaged sections and finished work that does not comply with these requirements.

3.3 DUCT SEALING

A. Seal ducts for duct static-pressure, seal classes, and leakage classes specified in "Duct Schedule" Article according to SMACNA's "HVAC Duct Construction Standards - Metal and Flexible."

B. Seal ducts to the following seal classes according to SMACNA's "HVAC Duct Construction Standards - Metal and Flexible":

1. Comply with SMACNA's "HVAC Duct Construction Standards - Metal and Flexible."
2. Outdoor, Supply-Air Ducts: Seal Class A.
3. Outdoor, Exhaust Ducts: Seal Class C.
4. Outdoor, Return-Air Ducts: Seal Class C.
5. Unconditioned Space, Supply-Air Ducts in Pressure Classes 2-Inch wg (500 Pa) and Lower: Seal Class B.
6. Unconditioned Space, Supply-Air Ducts in Pressure Classes Higher Than 2-Inch wg (500 Pa): Seal Class A.
7. Unconditioned Space, Exhaust Ducts: Seal Class C.
8. Unconditioned Space, Return-Air Ducts: Seal Class B.
9. Conditioned Space, Supply-Air Ducts in Pressure Classes 2-Inch wg (500 Pa) and Lower: Seal Class C.
10. Conditioned Space, Supply-Air Ducts in Pressure Classes Higher Than 2-Inch wg (500 Pa): Seal Class B.
11. Conditioned Space, Exhaust Ducts: Seal Class B.
12. Conditioned Space, Return-Air Ducts: Seal Class C.

3.4 HANGER AND SUPPORT INSTALLATION

A. Comply with SMACNA's "HVAC Duct Construction Standards - Metal and Flexible," Chapter 5, "Hangers and Supports."

B. Building Attachments: Concrete inserts, powder-actuated fasteners, or structural-steel fasteners appropriate for construction materials to which hangers are being attached.

1. Where practical, install concrete inserts before placing concrete.
2. Install powder-actuated concrete fasteners after concrete is placed and completely cured.
3. Use powder-actuated concrete fasteners for standard-weight aggregate concretes or for slabs more than 4 inches (100 mm) thick.
4. Do not use powder-actuated concrete fasteners for lightweight-aggregate concretes or for slabs less than 4 inches (100 mm) thick.
5. Do not use powder-actuated concrete fasteners for seismic restraints.

C. Hanger Spacing: Comply with SMACNA's "HVAC Duct Construction Standards - Metal and Flexible," Table 5-1 (Table 5-1M), "Rectangular Duct Hangers Minimum Size," and Table 5-2, "Minimum Hanger Sizes for Round Duct," for maximum hanger spacing; install hangers and supports within 24 inches (610 mm) of each elbow and within 48 inches (1200 mm) of each branch intersection.

D. Hangers Exposed to View: Threaded rod and angle or channel supports.

E. Support vertical ducts with steel angles or channel secured to the sides of the duct with welds, bolts, sheet metal screws, or blind rivets; support at each floor and at a maximum intervals of 16 feet (5 m).

F. Install upper attachments to structures. Select and size upper attachments with pull-out, tension, and shear capacities appropriate for supported loads and building materials where used.

3.5 CONNECTIONS

A. Make connections to equipment with flexible connectors complying with Division 23 Section "Air Duct Accessories."

B. Comply with SMACNA's "HVAC Duct Construction Standards - Metal and Flexible" for branch, outlet and inlet, and terminal unit connections.

3.6 DUCT CLEANING

A. Clean new and existing duct system(s) before testing, adjusting, and balancing.

B. Use service openings for entry and inspection.

1. Create new openings and install access panels appropriate for duct static-pressure class if required for cleaning access. Provide insulated panels for insulated or lined duct. Patch insulation and liner as recommended by duct liner manufacturer. Comply with Division 23 Section "Air Duct Accessories" for access panels and doors.
2. Disconnect and reconnect flexible ducts as needed for cleaning and inspection.
3. Remove and reinstall ceiling to gain access during the cleaning process.

C. Particulate Collection and Odor Control:

1. When venting vacuuming system inside the building, use HEPA filtration with 99.97 percent collection efficiency for 0.3-micron-size (or larger) particles.
2. When venting vacuuming system to outdoors, use filter to collect debris removed from HVAC system, and locate exhaust downwind and away from air intakes and other points of entry into building.

D. Clean the following components by removing surface contaminants and deposits:

1. Air outlets and inlets (registers, grilles, and diffusers).
2. Supply, return, and exhaust fans including fan housings, plenums (except ceiling supply and return plenums), scrolls, blades or vanes, shafts, baffles, dampers, and drive assemblies.

3. Air-handling unit internal surfaces and components including mixing box, coil section, air wash systems, spray eliminators, condensate drain pans, humidifiers and dehumidifiers, filters and filter sections, and condensate collectors and drains.
4. Coils and related components.
5. Return-air ducts, dampers, actuators, and turning vanes except in ceiling plenums and mechanical equipment rooms.
6. Supply-air ducts, dampers, actuators, and turning vanes.
7. Dedicated exhaust and ventilation components and makeup air systems.

E. Mechanical Cleaning Methodology:

1. Clean metal duct systems using mechanical cleaning methods that extract contaminants from within duct systems and remove contaminants from building.
2. Use vacuum-collection devices that are operated continuously during cleaning. Connect vacuum device to downstream end of duct sections so areas being cleaned are under negative pressure.
3. Use mechanical agitation to dislodge debris adhered to interior duct surfaces without damaging integrity of metal ducts, duct liner, or duct accessories.
4. Clean fibrous-glass duct liner with HEPA vacuuming equipment; do not permit duct liner to get wet. Replace fibrous-glass duct liner that is damaged, deteriorated, or delaminated or that has friable material, mold, or fungus growth.
5. Clean coils and coil drain pans according to NADCA 1992. Keep drain pan operational. Rinse coils with clean water to remove latent residues and cleaning materials; comb and straighten fins.
6. Provide drainage and cleanup for wash-down procedures.
7. Antimicrobial Agents and Coatings: Apply EPA-registered antimicrobial agents if fungus is present. Apply antimicrobial agents according to manufacturer's written instructions after removal of surface deposits and debris.

3.7 START UP

A. Air Balance: Comply with requirements in Division 23 Section "Testing, Adjusting, and Balancing for HVAC."

3.8 DUCT SCHEDULE

A. Exhaust Ducts:

1. Ducts Connected to Fans Exhausting (ASHRAE 62.1, Class 1 and 2) Air:

a. Pressure Class: Negative1-inch wg (250 Pa).
b. Minimum SMACNA Seal Class: A if negative pressure, and A if positive pressure.
c. SMACNA Leakage Class for Rectangular: 12 >.
d. SMACNA Leakage Class for Round and Flat Oval: 6 >.

2. Ducts Connected to Equipment Not Listed Above:

   a. Pressure Class: Positive or negative 2-inch wg (500 Pa).
   b. Minimum SMACNA Seal Class: A if negative pressure, and A if positive pressure.
   c. SMACNA Leakage Class for Rectangular: 12.
   d. SMACNA Leakage Class for Round and Flat Oval: 6.
   e. .

3.

B. Elbow Configuration:

1. Rectangular Duct: Comply with SMACNA's "HVAC Duct Construction Standards - Metal and Flexible," Figure 4-2, "Rectangular Elbows."

   a. Velocity 1000 fpm (5 m/s) or Lower:

      1) Radius Type RE 1 with minimum 0.5 radius-to-diameter ratio.
      2) Mitered Type RE 4 without vanes.

   b. Velocity 1000 to 1500 fpm (5 to 7.6 m/s):

      1) Radius Type RE 1 with minimum 1.0 radius-to-diameter ratio.
      2) Radius Type RE 3 with minimum 0.5 radius-to-diameter ratio and two vanes.
      3) Mitered Type RE 2 with vanes complying with SMACNA's "HVAC Duct Construction Standards - Metal and Flexible," Figure 4-3, "Vanes and Vane Runners," and Figure 4-4, "Vane Support in Elbows."

   c. Velocity 1500 fpm (7.6 m/s) or Higher:

      1) Radius Type RE 1 with minimum 1.5 radius-to-diameter ratio.
      2) Radius Type RE 3 with minimum 1.0 radius-to-diameter ratio and two vanes.
      3) Mitered Type RE 2 with vanes complying with SMACNA's "HVAC Duct Construction Standards - Metal and Flexible," Figure 4-3, "Vanes and Vane Runners," and Figure 4-4, "Vane Support in Elbows."

2. Rectangular Duct: Comply with SMACNA's "HVAC Duct Construction Standards - Metal and Flexible," Figure 4-2, "Rectangular Elbows."

   a. Radius Type RE 1 with minimum 1.5 radius-to-diameter ratio.
   b. Radius Type RE 3 with minimum 1.0 radius-to-diameter ratio and two vanes.

c. Mitered Type RE 2 with vanes complying with SMACNA's "HVAC Duct Construction Standards - Metal and Flexible," Figure 4-3, "Vanes and Vane Runners," and Figure 4-4, "Vane Support in Elbows."

3. Round Duct: Comply with SMACNA's "HVAC Duct Construction Standards - Metal and Flexible," Figure 3-4, "Round Duct Elbows."

a. Minimum Radius-to-Diameter Ratio and Elbow Segments: Comply with SMACNA's "HVAC Duct Construction Standards - Metal and Flexible," Table 3-1, "Mitered Elbows." Elbows with less than 90-degree change of direction have proportionately fewer segments.

1) Velocity 1000 fpm (5 m/s) or Lower: 0.5 radius-to-diameter ratio and three segments for 90-degree elbow.
2) Velocity 1000 to 1500 fpm (5 to 7.6 m/s): 1.0 radius-to-diameter ratio and four segments for 90-degree elbow.
3) Velocity 1500 fpm (7.6 m/s) or Higher: 1.5 radius-to-diameter ratio and five segments for 90-degree elbow.
4) Radius-to Diameter Ratio: 1.5.

b. Round Elbows, 12 Inches (305 mm) and Smaller in Diameter: Stamped or pleated.
c. Round Elbows, [14 Inches (356 mm)]<Insert dimension> and Larger in Diameter: Standing seam.

C. Branch Configuration:

1. Rectangular Duct: Comply with SMACNA's "HVAC Duct Construction Standards - Metal and Flexible," Figure 4-6, "Branch Connection."

a. Rectangular Main to Rectangular Branch: 45-degree entry.
b. Rectangular Main to Round Branch: Spin in.

2. Round: Comply with SMACNA's "HVAC Duct Construction Standards - Metal and Flexible," Figure 3-5, "90 Degree Tees and Laterals," and Figure 3-6, "Conical Tees." Saddle taps are permitted in existing duct.

a. Velocity 1000 fpm (5 m/s) or Lower: 90-degree tap.
b. Velocity 1000 to 1500 fpm (5 to 7.6 m/s): Conical tap.
c. Velocity 1500 fpm (7.6 m/s) or Higher: 45-degree lateral.

END OF SECTION 233113

SECTION 020802-PCB AND MERCURY EQUIPMENT REMOVAL

PART 1 GENERAL

1.1 REFERENCES

The publications listed below form a part of this specification to the extent referenced. The publications are referred to within the text by the basic designation only.

CODE OF FEDERAL REGULATIONS (CFR)

29 CFR 1910.1000	Air Contaminants
40 CFR 761	Polychlorinated Biphenyls (PCBs) Manufacturing, Processing, Distribution in Commerce, and Use Prohibitions
40 CFR 261	Resource Conservation and Recovery Act
40 CFR 262	Generators of Hazardous Waste
40 CFR 263	Transporters of Hazardous Waste
49 CFR 172	Hazardous Materials, Table, and Hazardous Materials Communications Regulations
49 CFR 178	Shipping Container Specification

1.2 EXISTING CONDITION REPORTS

A. *Limited Hazardous Materials Survey Report-Emery Shelter*, prepared by Froehling & Robertson, dated June 15, 2009.

1.3 SUMMARY

A. This section includes removal and disposal of PCB containing light ballasts and associated mercury-containing lamps that will be impacted by renovation activities at the Emery Shelter.

B. Related Sections include:

1. Section 01700 “Execution Requirements” part 3.2.A for hazard materials survey, testing, and report requirement.

C. The Contractor will be responsible for having a valid EPA Identification Number site specific for the Emery Shelter. The Contractor will be the **GENERATOR** of all hazardous waste generated and be subject to regulations set forth by the United States Environmental Protection Agency. If the generation of hazardous waste is greater than 2,200 lbs in a month, the generator is considered a Large Quantity Generator. Generation of less than 2,200 lbs in a month is classified as a Small Quantity Generator. The Contractor will manage, handle, ship, and dispose of all hazardous waste in accordance with all applicable regulations.

D. The Contractor has the responsibility for determining actual quantities of materials to be removed and reviewing the scope of work. No additional contract price adjustments will be allowed due to variances between actual quantities and the estimated quantities listed herein (unless otherwise specified in this document). The Contractor should allow under their base bid for the removal of all materials as described in the survey report and/or referenced in this specification.

E. The Contractor shall be responsible for removal and disposal of the following as part of the base bid:

1. PCB containing light ballasts (Approximately 75)

2. Mercury containing fluorescent light lamps (Approximately 150)

Note: The Abatement Contractor shall coordinate with the Electrical and General Contractors to ensure that all appropriate systems that will be impacted by demolition have been properly decommissioned prior to the start of any work.

1.4. DEFINITIONS

A. Certified Industrial Hygienist (CIH)

An industrial hygienist who shall be certified by the American Board of Industrial Hygiene.

B. Leak

Leak or leaking means any instance in which PCB or mercury-containing equipment has any PCBs or mercury on any portion of its external surface.

C. Mercury-Containing Equipment

As used in this specification shall mean all fluorescent bulbs and non-digital thermostats and thermometers scheduled for demolition and/or removal as indicated in the Contract documents that:

1. Fails the TCLP test for mercury, or

2. According to the Manufacturer, would fail the TCLP test for mercury

3. By calculation of equivalent TCLP mercury level from total metal analysis would fail the TCLP test for mercury.

D. Polychlorinated Biphenyls (PCBs)

PCBs as used in this specification shall mean the same as PCBs, PCB containing lighting ballast, and PCB container, as defined in 40 CFR 761, Section 3, Definitions.

E. Spill

Spill means both intentional and unintentional spills, leaks, and other uncontrolled discharges when the release results in any quantity of PCBs or mercury running off or about to run off the external surface of the equipment or other PCB or mercury source, as well as the contamination resulting from those releases.

F. Generator

Any person, by site, whose action or process produces hazardous waste identified or listed in [40 CFR part 261] or whose act first causes a hazardous waste to become subject to regulation.

1.5. QUALITY ASSURANCE

A. Regulatory Requirements

Perform PCB related work in accordance with 40 CFR 761. Perform mercury-containing equipment storage and transport in accordance with 40 CFR 262 and 40 CFR 263.

B. Training

All workers shall have training in accordance with 29 CFR 1910.140 (HAZWOPER). The instruction shall include: The dangers of PCB and mercury exposure, decontamination, safe work practices, and applicable OSHA and EPA

regulations. The COTR shall review and approve the PCB and Mercury-Containing Equipment Removal Work Plans.

C. Regulation Documents

Maintain at all times one copy each at the office and one copy each in view at the job site of 29 CFR 1910.1000, 40 CFR 761, 40 CFR 262, 40 CFR 263 and of the Contractor removal work plan and disposal plan for PCB and mercury-containing equipment.

1.6 SUBMITTALS

Submit two copies of the following documentation:

A. Certificates

1. Training Certification

2. PCB and Mercury-Containing Equipment Removal Work Plan

3. PCB and Mercury-Containing Equipment Disposal Work Plan

B. Closeout Submittals

1. Transporter certification of notification to EPA of their PCB and mercury waste activities and EPA ID numbers

2. Certification of Decontamination

3. Certificate of Disposal and/or recycling. Submit to the COTR before application for payment within 30 days of the date that the disposal of the PCB and mercury-containing waste identified on the manifest was completed.

1.7 ENVIRONMENTAL REQUIREMENTS

Use special clothing:

A. Disposable gloves (polyethylene)
B. Eye protection
C. PPE

1.8. SCHEDULING

A. Notify COTR 20 days prior to the start of PCB and mercury-containing equipment removal work.

1.9 QUALITY ASSURANCE

A. PCB and Mercury-Containing Equipment Removal Work Plan

Submit a job-specific plan within 20 calendar days after award of contract of the work procedures to be used in the removal, packaging, and storage of PCB-containing lighting ballasts, associated mercury-containing lamps and mercury-containing thermostats. Include in the plan: Requirements for U.C. Personal Protective Equipment (PPE), spill cleanup procedures and equipment, eating, smoking and restroom procedures. Obtain approval of the plan by the COTR prior to the start of PCB and mercury-containing equipment removal work.

B. PCB and Mercury-Containing Equipment Disposal Plan

Submit two copies of a PCB and mercury-containing equipment Disposal Plan within 20 calendar days after award of contract. The PCB and Mercury-Containing Equipment Disposal Plan shall comply with applicable requirements of federal, state, and local PCB and RCRA waste regulations and address:

1. Estimated quantities of wastes to be generated, disposed of, and recycled.

2. Names and qualifications of each Contractor that will be transporting, storing, treating, and disposing of the wastes. Include the facility location. Furnish two copies of EPA and state PCB and mercury-containing equipment waste permit applications and EPA identification numbers.

3. Names and qualifications (experience and training) of personnel who will be working on-site with PCB and mercury-containing equipment wastes.

4. Spill prevention, containment, and cleanup contingency measures to be implemented.

5. Work plan and schedule for PCB and mercury-containing equipment waste removal, containment, storage, transportation, disposal and or recycling. Wastes shall be cleaned up and containerize daily.

PART 2 PRODUCTS

Not used.

PART 3 EXECUTION

3.1 WORK PROCEDURE

Furnish labor, materials, services, and equipment necessary for the removal of PCB containing lighting ballasts, associated mercury-containing fluorescent lamps, mercury vapor bulbs, and mercury-containing thermostats in accordance with local, state, or federal regulations. Do not expose PCBs to open flames or other high temperature sources since toxic decomposition by-products may be produced. Do not break mercury containing equipment.

A. Work Operations

Ensure that work operations or processes involving PCB or PCB-contaminated materials are conducted in accordance with 40 CFR 761, 40 CFR 262 40 CFR 263, and the applicable requirements of this section, including but not limited to:

1. Obtaining suitable PCB and mercury-containing equipment storage sites.

2. Notifying the COTR prior to commencing the operation.

3. Reporting leaks and spills to the COTR.

4. Cleaning up spills.

5. Inspecting PCB and PCB-contaminated items and waste containers for leaks and forwarding two copies of inspection reports to the Owner.

6. Maintaining inspection, inventory and spill records.

3.2 PCB SPILL CLEANUP REQUIREMENTS

A. PCB Spills

Immediately report to the Contracting Officer any PCB spills.

B. PCB Spill Control Area

Rope off an area around the edges of a PCB leak or spill and post a "PCB Spill Authorized Personnel Only" caution sign. Immediately transfer leaking items to a drip pan or other container.

C. PCB Spill Cleanup

40 CFR 761, subpart G. Initiate cleanup of spills as soon as possible, but no later than 24 hours of its discovery. Mop up the liquid with rags or other conventional absorbent. The spent absorbent shall be properly contained and disposed of as solid PCB waste.

D. Records and Certification

Document the cleanup with records of decontamination in accordance with 40 CFR 761, Section 125, Requirements for PCB Spill Cleanup. Provide two copies of test results of cleanup and certification of decontamination.

3.3 REMOVAL

A. Ballasts

As ballast is removed from the lighting fixture, inspect label on ballast. Ballasts without a “No PCB” label shall be assumed to contain PCBs and containerized and disposed of as required under paragraphs STORAGE FOR DISPOSAL and DISPOSAL. Ballasts with a “No PCB” label may be disposed of as normal construction debris.

B. Lighting Lamps

Remove lighting tubes/lamps from the lighting fixture and carefully place (unbroken) into appropriate containers (original transport boxes or equivalent). In the event of a lighting tube/lamp breaking, sweep and place waste in double plastic taped bags and dispose of as hazardous waste as specified herein.

3.4 STORAGE FOR DISPOSAL

A. Storage Containers for PCBs

49 CFR 178. Store PCB in containers approved by DOT for PCB.

B. Storage Containers for Lamps

Store mercury-containing lamps in appropriate DOT containers. The boxes shall be stored and labeled for transport in accordance with 40 CFR 262 and 40 CFR 263.

C. Labeling of Waste Containers

Label with the following:

1. Date the item was placed in storage and the name of the cognizant activity/building.

2. "Caution Contains PCB," conforming to 40 CFR 761, CFR Subpart C. Affix labels to PCB waste containers.

3. Label mercury-containing lamps in accordance with 49 CFR 172, 40 CFR 262, and 40 CFR 263. Affix labels to all lighting waste containers.

3.5 DISPOSAL

Intact PCB ballasts and mercury containing equipment will be transported and disposed of by the Contractor. Broken or leaking ballasts, lamps, and thermostats will be treated as hazardous waste and disposed of by the Contractor according to all applicable regulations.

A. Identification Number

Federal regulations 40 CFR 761 and 40 CFR 263 require that generators, transporters, commercial stores, and disposers of PCB and mercury-containing waste posses U.S. EPA identification numbers. The contractor shall verify that the activity has a U.S. EPA generator identification number for use on the Uniform Hazardous Waste manifest. If not, the contractor shall advise the activity that it must file and obtain an I.D. number with EPA prior to commencement of removal work.

B. Transporter Certification

Comply with disposal and transportation requirements outlined in 40 CFR 761 and 40 CFR 263. Before transporting the PCB and mercury waste, sign and date the manifest-acknowledging acceptance of the PCB and mercury-containing waste from the COTR. Return two signed copies to the COTR before leaving the job site. Ensure that the manifest accompanies the PCB and mercury waste at all times. Submit transporter certification of notification to EPA of their PCB and mercury waste activities (EPA Form 7710-53).

C. Certificate of Disposal and/or Recycling

Certificate for the PCB waste disposed shall include:

1. The identity of the disposal and or recycling facility, by name, address, and EPA identification number.

2. The identity of the PCB waste affected by the Certificate of Disposal including reference to the manifest number for the shipment.

3. A statement certifying the fact of disposal and or recycling of the identified PCB waste, including the date(s) of disposal, and identifying the disposal process used.

4. A certification as defined in 40 CFR 761.

END OF SECTION 020802

SECTION 051200 - STRUCTURAL STEEL

PART 1 - GENERAL

1.1 RELATED DOCUMENTS

A. Drawings and general provisions of the Contract, including General and Supplementary Conditions and Division 1 Specification Sections, apply to this Section.

1.2 SUMMARY

A. This Section includes structural steel fabrication and erection of structural steel work, as shown on drawings including schedules, notes, and details showing size and location of members, typical connections, and types of steel required.

1. Structural steel is that work defined in American Institute of Steel Construction (AISC) "Code of Standard Practice" and as otherwise shown on drawings.

B. Design of Connections: Design connections as indicated. Details shown are typical; similar details apply to similar conditions, unless otherwise indicated.

1. Verify dimensions at site whenever possible without causing delay in the work.

2. Promptly notify COTR whenever information for design of connections for any portion of the structure is not clearly indicated.

C. This Section includes structural steel.

1.3 SUBMITTALS

A. General: Submit each item in this Article according to the Conditions of the Contract and Division 1 Specification Sections.

B. Product Data for each type of product specified or manufacturer's specifications and installation instruction for following products. Include laboratory test reports and other data to show compliance with specifications (including specified standards).

1. Structural steel (each type), including certified copies of mill reports covering chemical and physical properties.

2. Structural steel primer paint.

3. Shrinkage-resistant grout.

C. Shop Drawings detailing fabrication of structural steel components.

1. Include details of cuts, connections, splices, camber, holes, and other pertinent data.

2. Indicate welds by standard AWS symbols, distinguishing between shop and field welds, and show size, length, and type of each weld.

3. Indicate type, size, and length of bolts, distinguishing between shop and field bolts.

4. Include Shop Drawings prepared under the supervision of a Professional Engineer.

D. Mill test reports signed by manufacturers certifying that their products, including the following, comply with requirements.

1. Structural steel, including chemical and physical properties.

2. Bolts, nuts, and washers, including mechanical properties and chemical analysis.

3. Shop primers.

4. Nonshrink grout.

1.4 QUALITY ASSURANCE

A. Installer Qualifications: Engage an experienced Installer who has completed structural steel work similar in material, design, and extent to that indicated for this Project and with a record of successful in-service performance.

B. Fabricator Qualifications: Engage a firm experienced in fabricating structural steel similar to that indicated for this Project and with a record of successful in-service performance, as well as sufficient production capacity to fabricate structural steel without delaying the Work.

C. Codes and Standards: Comply with applicable provisions of the following specifications and documents, except as otherwise indicated:

1. American Institute of Steel Construction (AISC) "Code of Standard Practice for Steel Buildings and Bridges."

a. Nothing in this Code of Practice shall be construed as adding in any way to the Government's responsibility under the provisions of this Contract.

b. Where reference is made in this Code of Practice to inspection of Work. The party responsible for those inspection services is as defined elsewhere in the drawings and specifications.

c. Paragraph 4.2.1 of the above code is hereby modified by deletion of the following sentence:

1) "This approval constitutes the Government's acceptance of all responsibility for the design adequacy of any detail configuration of connections developed by the fabricator as a part of his preparation of these shop drawings."

2. AISC's "Specification for Structural Steel Buildings--Allowable Stress Design and Plastic Design" including "Commentary".

3. AISC's "Specification for Allowable Stress Design of Single-Angle Members." American Welding Society (AWS) D1.1 "Structural Welding Code – Steel."

4. ASTM A 6 "Specification for General Requirements for Rolled Steel Plates, Shapes, Sheet Piling, and Bars for Structural Use."

D. Welding Standards: Comply with applicable provisions of AWS D1.1 "Structural Welding Code--Steel." Qualifications for Welding Work: Qualify welding procedures and welding operators in accordance with AWS "Qualification" requirements.

1. Present evidence that each welder has satisfactorily passed AWS qualification tests for welding processes involved and, if pertinent, has undergone recertification. Provide certification those welders to be employed in work satisfactorily passed AWS qualification tests.

2. If re-certification of welders is required, retesting will be Contractor's responsibility.

1.5 DELIVERY, STORAGE, AND HANDLING

A. Deliver structural steel to Project site in such quantities and at such times to ensure continuity of installation.

B. Store materials to permit easy access for inspection and identification. Keep steel members off ground by using pallets, platforms, or other supports. Protect steel members and packaged materials from erosion and deterioration.

1. Store fasteners in a protected place. Clean and relubricate bolts and nuts that become dry or rusty before use.

2. Do not store materials on structure in a manner that might cause distortion or damage to members or supporting structures. Repair or replace damaged materials or structures as directed.

PART 2 - PRODUCTS

2.1 MATERIALS

A. Metal Surfaces, General: For fabrication of work that will be exposed to view, use only materials that are smooth and free of surface blemishes including pitting, rust and scale seam marks, roller marks, rolled trade names, and roughness. Remove such blemishes by grinding, or by welding and grinding, prior to cleaning, treating and applying surface finishes.

B. Structural Steel Angles, Plates and Bars: ASTM A 36.

C. Anchor Rods, Bolts, Nuts, and Washers: As follows: ASTM A 307, Grade A, regular low-carbon steel bolts and nuts.

D. Welding Electrodes for welding: Comply with AWS requirements.

E. Epoxy Anchors shall be galvanized steel Fy=58ksi with a minimum allowable shear capacity of 2.4k and a minimum allowable tensile capacity of 1.5k into solid masonry.

2.2 PRIMER

A. Primer: Fabricator's standard lead- and chromate-free, nonasphaltic, rust-inhibiting primer.

2.3 GROUT

A. Nonmetallic, Shrinkage-Resistant Grout: Premixed, nonmetallic, noncorrosive, nonstaining grout containing selected silica sands, Portland Cement, shrinkage compensating agents, plasticizing and water-reducing agents, complying with ASTM C 1107, of consistency suitable for application, and a 30-minute working time.

2.4 FABRICATION

A. Shop Fabrication and Assembly: Fabricate and assemble structural steel in shop to greatest extent possible. Fabricate structural steel according to AISC specifications referenced in this Section and as indicated on final approved shop drawings.

B. Thermal Cutting: Perform thermal cutting by machine to greatest extent possible.

1. Plane thermally cut edges to be welded.

C. Finishing: Accurately mill ends of columns and other members transmitting loads in bearing.

D. Holes: Provide holes required for securing other work to structural steel framing and for passage of other work through steel framing members, include details Shop Drawings.

1. Cut, drill, or punch holes perpendicular to metal surfaces. Do not flame-cut holes or enlarge holes by burning. Drill holes in bearing plates.

2. Weld threaded nuts to framing and other specialty items as indicated to receive other work.

E. Connections: Weld or bolt shop connections, as indicated.

2.5 SHOP CONNECTIONS

A. Shop installs and tighten nonhigh-strength bolts.

B. Weld Connections: Comply with AWS D1.1 for procedures, appearance and quality of welds, and methods used in correcting welding work.

1. Assemble and weld built-up sections by methods that will maintain true alignment of axes without warp.

2. Verify that weld sizes, fabrication sequence, and equipment used for architecturally exposed structural steel will limit distortions to allowable tolerances. Prevent surface bleeding of backside welding on exposed steel surfaces. Grind smooth exposed fillet welds 1/2 inch and larger. Grind flush butt welds. Dress exposed welds.

2.6 SHOP PRIMING

A. General: Shop-paint structural steel, except those members or portions of members to be embedded in concrete or mortar. Paint embedded steel that is partially exposed on exposed portions and initial 2 inches of embedded areas only.

1. Do not paint surfaces to be welded.

2. Do not paint surface schedules to receive sprayed-on fireproofing.

3. Apply two coats of paint to surfaces that are inaccessible after assembly or erection. Change color of second coat to distinguish it from first.

B. Priming: Immediately after surface preparation, apply primer according to manufacturer's instructions and at rate recommended by SSPC to provide a dry film thickness of not less than 1.5 mils. Use priming methods that result in full coverage of joints, corners, edges, and exposed surfaces.

1. Stripe paint corners, crevices, bolts, welds, and sharp edges.

2. Apply two coats of shop paint to inaccessible surfaces after assembly or erection. Change color of second coat to distinguish it from first.

2.7 GALVANIZING

A. Hot-Dip Galvanized Finish: Apply zinc coating by the hot-dip process to structural steel indicated for galvanizing according to ASTM A 123, including all exposed steel.

PART 3 - EXECUTION

3.1 EXAMINATION

A. Before erection proceeds, and with the steel erector present, verify elevations of concrete and masonry bearing surfaces and locations of anchorages for compliance with requirements.

B. Do not proceed with erection until unsatisfactory conditions have been corrected.

3.2 PREPARATION

A. Provide temporary shores, guys, braces, and other supports during erection to keep structural steel secure, plumb, and in alignment against temporary construction loads and loads equal in intensity to design loads. Remove temporary supports when permanent structural steel, connections, and bracing are in place, unless otherwise indicated.

1. Do not remove temporary shoring supporting composite deck construction until cast-in-place concrete has attained its design compressive strength.

3.3 ERECTION

A. Set structural steel accurately in locations, elevations, and alignment indicated and according to AISC specifications referenced in this Section.

B. Temporary Shoring and Bracing: Provide temporary shoring and bracing members with connections of sufficient strength to bear imposed loads. Remove temporary members and connections when permanent members are in place and final connections are made. Provide temporary guy lines to achieve proper alignment of structures as erection proceeds.

C. Temporary Planking: Provide temporary planking and working platforms as necessary to effectively complete work.

D. Adhesive and Epoxy Anchors: Use only injection tools and mixing nozzles as recommended by the manufacturer. Install in accordance with manufacturer's written instructions.

E. Maintain erection tolerances of structural steel within AISC's "Code of Standard Practice for Steel Buildings and Bridges."

F. Align and adjust various members forming part of complete frame or structure before permanently fastening. Before assembly, clean bearing surfaces and other surfaces that will be in permanent contact. Perform necessary adjustments to compensate for discrepancies in elevations and alignment.

1. Level and plumb individual members of structure.

2. Establish required leveling and plumbing measurements on mean operating temperature of structure. Make allowances for difference between temperature at time of erection and mean temperature at which structure will be when completed and in service.

G. Field Assembly: Set structural frames accurately to lines and elevations indicated. Align and adjust various members forming part of complete frame or structure before permanently fastening. Clean bearing surfaces and other surfaces that will be in permanent contact before assembly. Perform necessary adjustments to compensate for discrepancies in elevations and alignment.

H. Do not use thermal cutting during erection.

I. Finish sections thermally cut during erection equal to a sheared appearance.

J. Do not enlarge unfair holes in members by burning or by using drift pins. Ream holes that must be enlarged to admit bolts.

K. Erection Bolts: On exposed welded construction, remove erection bolts, fill holes with plug welds, and grind smooth at exposed surfaces.

1. Comply with AISC Specifications for bearing, adequacy of temporary connections, alignment, and removal of paint on surfaces adjacent to field welds.

L. Gas Cutting: Do not use gas-cutting torches in field for correcting fabrication errors in primary structural framing.

3.4 FIELD CONNECTIONS

A. Install and tighten nonhigh-strength bolts, except where high-strength bolts are indicated.

B. Weld Connections: Comply with AWS D1.1 for procedures, appearance and quality of welds, and methods used in correcting welding work.

1. Comply with AISC specifications referenced in this Section for bearing, adequacy of temporary connections, alignment, and removal of paint on surfaces adjacent to field welds.

3.5 FIELD QUALITY CONTROL

A. Contractor will engage an independent testing, inspection, and inspecting agency to perform field inspections and tests and to prepare test reports in compliance with special inspections required by the Building Code and as specified herein.

   1. Inspection and testing agency shall conduct inspections and interpret tests and state in each report whether tested Work complies with or deviates from requirements. Test specimens comply with requirements, and specifically state any deviations there from.

B. Provide access for testing agency to places where structural steel work is being fabricated or produced so that required inspection and testing can be accomplished.

C. Provide testing and inspection agency with one set of current contract documents and approved shop drawings including all approved amendments or clarifications for use in their inspection. Provide work area for layout of drawings.

D. Correct deficiencies in or remove and replace structural steel work that inspections and test reports indicate do not comply with specified requirements. Perform additional tests, at Contractor's expense as necessary to reconfirm any noncompliance of original work and to show compliance of correct work. Corrections of deficiencies noted by the testing and inspection agency does not imply acceptance of the Work.

E. Field-bolted connections will be tested and inspected according to RCSC's "Specification for Structural Joints Using ASTM A 325 or A 490 Bolts."

F. In addition to visual inspection, field-welded shear connectors will be inspected and tested according to requirements of AWS D1.1 for stud welding and as follows:

   1. Bend tests will be performed when visual inspections reveal either less than a continuous 360-degree flash or welding repairs to any shear connector.

G. Shop and Field Welding: Inspect and test according to AWS D1.1. as follows:

   1. Verify certification of welders and conduct inspections and tests as required. Record types and locations of defects found in work. Record work required and performed to correct deficiencies.

   2. Perform visual inspection of all welds.

H. Field Inspection: Inspect all structural steel work, including but not limited to the following, for conformance with the contract documents, the approved shop drawings and AISC requirements.

1. Connections.

2. Bolts.

3. Welds.

I. Contractor's testing and inspection agency shall submit a letter of certification stamped by the Professional Engineer registered in District of Columbia responsible for all inspection and testing work specified herein, certifying that all structural steel work, including, but not limited to, welded and high-strength bolted connections, has been constructed in accordance with contract documents and approved shop drawings.

J. Reports: Submit inspection and test reports to COTR, and Contractor within one week of work.

3.6 CLEANING

A. Touchup Painting: Cleaning and touchup painting of field welds, bolted connections, and abraded areas of shop paint on structural steel are included in Division 9 Section "Painting."

END OF SECTION 05120

SECTION 061000 - ROUGH CARPENTRY

PART 1 - GENERAL

1.1 RELATED DOCUMENTS

A. Documents referred to the DC Government Bid Documents, which include the Solicitation Documents, Contract Sections, Contract Clauses, Special Contract Requirements and Standard Contract Provisions for Use With Specifications for District of Columbia Government Construction Projects (January 2007) are part hereof the same as if repeated herein.

1.2 SUMMARY

A. Section Includes:

1. Framing with dimension lumber.
2. Framing with engineered wood products.
3. Wood blocking and nailers.
4. Wood furring.
5. Plywood backing panels for electrical and fire protection panels.

B. Related Requirements:
1. Section 061600 "Sheathing."

1.3 DEFINITIONS

A. Exposed Framing: Framing not concealed by other construction.

B. Dimension Lumber: Lumber of 2 inches nominal or greater but less than 5 inches nominal in least dimension.

C. Lumber grading agencies and boards, and the abbreviations used to reference them, include the following:

1. ALSC Board of Review: American Lumber Standards Committee
2. ASLS: American Softwood Lumber Standard
3. NeLMA: Northeastern Lumber Manufacturers' Association.
4. SPIB: The Southern Pine Inspection Bureau.
5. WCLIB: West Coast Lumber Inspection Bureau.

1.4 ACTION SUBMITTALS

A. Product Data: Indicate component materials and dimensions and include construction and application details. For each type of process and factory-fabricated product and for the following products. For the following product:
   1. Engineered wood projects
   2. Metal framing anchors

B. Include data for wood-preservative treatment from chemical treatment manufacturer and certification by treating plant that treated materials comply with requirements. Indicate type of preservative used and net amount of preservative retained.

C. For products receiving a waterborne treatment, include statement that moisture content of treated materials was reduced to levels specified before shipment to Project site.

D. Include copies of warranties from chemical treatment manufacturers for each type of treatment.

1.5 INFORMATIONAL SUBMITTALS

A. Material Certificates: For dimension lumber specified to comply with minimum allowable unit stresses. Indicate species and grade selected for each use and design values approved by the ALSC Board of Review.

1.6 QUALITY ASSURANCE

A. Testing Agency Qualifications: For testing agency providing classification marking for fire-retardant treated material, an inspection agency acceptable to COTR that periodically performs inspections to verify that the material bearing the classification marking is representative of the material tested.

1.7 DELIVERY, STORAGE, AND HANDLING

A. Stack lumber flat with spacers beneath and between each bundle to provide air circulation. Protect lumber from weather by covering with waterproof sheeting, securely anchored. Provide for air circulation around stacks and under coverings.

PART 2 - PRODUCTS

2.1 WOOD PRODUCTS, GENERAL

A. Lumber: DOC PS 20 ASLS and applicable rules of grading agencies indicated. If no grading agency is indicated, provide lumber that complies with the applicable rules of

any rules-writing agency certified by the ALSC Board of Review. Provide lumber graded by an agency certified by the ALSC Board of Review to inspect and grade lumber under the rules indicated.

1. Factory mark each piece of lumber with grade stamp of grading agency.
2. For exposed lumber indicated to receive a stained or natural finish, mark grade stamp on end or back of each piece.
3. Where nominal sizes are indicated, provide actual sizes required by DOC PS 20 for moisture content specified. Where actual sizes are indicated, they are minimum dressed sizes for dry lumber.
4. Provide dressed lumber, S4S, unless otherwise indicated.

B. Maximum Moisture Content of Lumber: 19 percent for 2-inch nominal thickness or less, no limit for more than 2-inch nominal thickness unless otherwise indicated.

C. Engineered Wood Products: Provide engineered wood products acceptable to authorities having jurisdiction and for which current model code research or evaluation reports exist that show compliance with building code in effect for Project.

1. Allowable Design Stresses: Provide engineered wood products with allowable design stresses, as published by manufacturer, that meet or exceed those indicated. Manufacturer's published values shall be determined from empirical data or by rational engineering analysis and demonstrated by comprehensive testing performed by a qualified independent testing agency.

2.2 WOOD-PRESERVATIVE-TREATED LUMBER

A. Preservative Treatment by Pressure Process: AWPA; Use Category UC2 for interior construction not in contact with the ground, Use Category UC3b for exterior construction not in contact with the ground, and Use Category UC4a for items in contact with the ground.

1. Preservative Chemicals: Acceptable to authorities having jurisdiction and containing no arsenic or chromium.

B. Kiln-dry lumber after treatment to a maximum moisture content of 19 percent. Do not use material that is warped or that does not comply with requirements for untreated material.

C. Mark lumber with treatment quality mark of an inspection agency approved by the ALSC Board of Review.

1. For exposed lumber indicated to receive a stained or natural finish, mark end or back of each piece or omit marking and provide certificates of treatment compliance issued by inspection agency.

D. Application: Treat items indicated on Drawings, and the following:

1. Wood cants, nailers, curbs, equipment support bases, blocking, stripping, and similar members in connection with roofing, flashing, vapor barriers, and waterproofing.
2. Wood sills, sleepers, blocking, furring, stripping, and similar concealed members in contact with masonry or concrete.
3. Wood framing and furring attached directly to the interior of below-grade exterior masonry or concrete walls.
4. Wood framing members that are less than 18 inches above the ground in crawlspaces or unexcavated areas.
5. Wood floor plates that are installed over concrete slabs-on-grade.

2.3 DIMENSION LUMBER:

A. General: Provide dimension lumber of grades indicated according to the ALSC National Grading Rules (NCR) provision of the inspection agency indicated.

B. Framing Other than Non-Load Bearing Partitions: Provide frame of the following grade and species:
1. Grade: #2 Southern Pine

2.4 MISCELLANEOUS LUMBER

A. General: Provide miscellaneous lumber indicated and lumber for support or attachment of other construction, including the following:

1. Blocking.
2. Nailers.
3. Furring.

B. For items of dimension lumber size, provide Standard, Stud, or No. 3 grade lumber of any species.

C. For concealed boards, provide lumber with 19 percent maximum moisture content and any of the following species and grades:

1. Mixed southern pine; No. 2 grade; SPIB.
2. Hem-fir or hem-fir (north); Construction or No. 2 Common grade; NLGA, WCLIB, or WWPA.
3. Spruce-pine-fir (south) or spruce-pine-fir; Construction or No. 2 Common grade; NeLMA, NLGA, WCLIB, or WWPA.

D. For blocking and nailers used for attachment of other construction, select and cut lumber to eliminate knots and other defects that will interfere with attachment of other work.

E. For furring strips for installing plywood or hardboard paneling, select boards with no knots capable of producing bent-over nails and damage to paneling.

2.5 PLYWOOD BACKING PANELS

A. Equipment Backing Panels: DOC PS 1, Exterior, AC, in thickness indicated or, if not indicated, not less than 1/2-inch nominal thickness.

2.6 FASTENERS

A. General: Provide fasteners of size and type indicated that comply with requirements specified in this article for material and manufacture.

1. Where rough carpentry is exposed to weather, in ground contact, pressure-preservative treated, or in area of high relative humidity, provide fasteners with hot-dip zinc coating complying with ASTM A 153/A 153M or of Type 304 stainless steel.

B. Nails, Brads, and Staples: FS FF-N-105 ASTM F 1667.

C. Wood Screws: ASME B18.6.1.

D. Lag Bolts: ASME B18.2.1.

E. Bolts: Steel bolts complying with ASTM A 307, Grade A; with ASTM A 563 hex nuts and, where indicated, flat washers.

2.7 METAL FRAMING ANCHORS

A. Basis-of-Design Product: Subject to compliance with requirements, provide product indicated on Drawings or comparable product by one of the following:

1. Cleveland Steel Specialty Co.
2. KC Metals Products, Inc.
3. Phoenix Metal Products, Inc.
4. Simpson Strong-Tie Co., Inc.
5. USP Structural Connectors.

B. Allowable Design Loads: Provide products with allowable design loads, as published by manufacturer, that meet or exceed those of basis-of-design products. Manufacturer's published values shall be determined from empirical data or by rational engineering

analysis and demonstrated by comprehensive testing performed by a qualified independent testing agency.

C. Hot-Dip, Heavy-Galvanized Steel Sheet: ASTM A 653/A 653M; structural steel (SS), high-strength low-alloy steel Type A (HSLAS Type A), or high-strength low-alloy steel Type B (HSLAS Type B); G185 coating designation; and not less than 0.036 inch thick.

1. Use for interior locations unless otherwise indicated.
2. Use for wood-preservative-treated lumber and where indicated.

2.8 MISCELLANEOUS MATERIALS

A. Adhesives for Gluing to Concrete: Formulation complying with ASTM D 3498 that is approved for use indicated by adhesive manufacturer.

PART 3 - EXECUTION

3.1 INSTALLATION, GENERAL

A. Set rough carpentry to required levels and lines, with members plumb, true to line, cut, and fitted.

B. Fit rough carpentry to other construction; scribe and cope as needed for accurate fit. Locate furring, nailers, blocking, and similar supports to comply with requirements for attaching other construction.

C. Framing Standard: Comply with AF&PA's WCD 1, "Details for Conventional Wood Frame Construction," unless otherwise indicated.

D. Framing with Engineered Wood Products: Install engineered wood products to comply with manufacturer's written instructions.

E. Install plywood backing panels by fastening to studs; coordinate locations with utilities requiring backing panels. Install fire-retardant treated plywood backing panels with classification marking of testing agency exposed to view.

F. Metal Framing Anchors: Install metal framing anchors to comply with manufacturer's written instructions. Install fasteners through each fastener hole.

G. Do not splice structural members between supports unless otherwise indicated.

H. Provide blocking and framing as indicated and as required to support facing materials, fixtures, specialty items, and trim.

1. Provide metal clips for fastening gypsum board or lath at corners and intersections where framing or blocking does not provide a surface for fastening edges of panels. Space clips not more than 16 inches o.c.

I. Sort and select lumber so that natural characteristics will not interfere with installation or with fastening other materials to lumber. Do not use materials with defects that interfere with function of member or pieces that are too small to use with minimum number of joints or optimum joint arrangement.

J. Comply with AWPA M4 for applying field treatment to cut surfaces of preservative-treated lumber.

1. Use inorganic boron for items that are continuously protected from liquid water.
2. Use copper naphthenate for items not continuously protected from liquid water.

K. Securely attach rough carpentry work to substrate by anchoring and fastening as indicated, complying with the following:

1. Table 2304.9.1, "Fastening Schedule," in ICC's International Building Code.

L. Use steel common nails unless otherwise indicated. Select fasteners of size that will not fully penetrate members where opposite side will be exposed to view or will receive finish materials. Make tight connections between members. Install fasteners without splitting wood. Drive nails snug but do not countersink nail heads unless otherwise indicated.

1. Use finishing nails unless otherwise indicated. Countersink nail heads and fill holes with wood filler.

3.2 WOOD FURRING INSTALLATION

A. Install level and plumb with closure strips at edges and openings. Shim with wood as required for tolerance of finish work.

B. Furring to Receive Plaster Lath: Install 1-by-2-inch nominal- size furring vertically at 16 inches o.c.

3.3 FLOOR JOIST FRAMING INSTALLATION

A. General: Install floor joists with crown edge up and support ends of each member with not less than 1-1/2 inches of bearing on wood or metal, or 3 inches on masonry. Attach floor joists as follows:

1. Where supported on wood members, by toe nailing or by using metal framing anchors.

2. Where framed into wood supporting members, by using wood ledgers as indicated or, if not indicated, by using metal joist hangers.

B. Fire Cuts: At joists built into masonry, bevel cut ends 3 inches and do not embed more than 4 inches.

C. Frame openings with headers and trimmers supported by metal joist hangers; double headers and trimmers where span of header exceeds 48 inches.

D. Do not notch in middle third of joists; limit notches to one-sixth depth of joist, one-third at ends. Do not bore holes larger than 1/3 depth of joist; do not locate closer than 2 inches from top or bottom.

E. Provide solid blocking of 2-inch nominal thickness by depth of joist at ends of joists unless nailed to header or band.

F. Lap members framing from opposite sides of beams, girders, or partitions not less than 4 inches or securely tie opposing members together. Provide solid blocking of 2-inch nominal thickness by depth of joist over supports.

G. Anchor members paralleling masonry with 1/4-by-1-1/4-inch metal strap anchors spaced not more than 96 inches o.c., extending over and fastening to three joists. Embed anchors at least 4 inches into grouted masonry with ends bent at right angles and extending 4 inches beyond bend.

H. Provide solid blocking between joists under jamb studs for openings.

I. Under non-load-bearing partitions, provide double joists separated by solid blocking equal to depth of studs above.

1. Provide triple joists separated as above, under partitions receiving ceramic tile and similar heavy finishes or fixtures.

J. Provide bridging of type indicated below, at intervals of 96 inches o.c., between joists.

1. Diagonal wood bridging formed from bevel-cut, 1-by-3-inch nominal- size lumber, double-crossed and nailed at both ends to joists.
2. Steel bridging installed to comply with bridging manufacturer's written instructions.

3.4 CEILING JOIST AND RAFTER FRAMING INSTALLATION

A. Provide special framing as indicated for roof framing repairs.

3.5 PROTECTION

A. Protect rough carpentry from weather. If, despite protection, rough carpentry becomes wet, apply EPA-registered borate treatment. Apply borate solution by spraying to comply with EPA-registered label.

END OF SECTION 061000

SECTION 102000 - LOUVERS AND VENTS

PART 1 - GENERAL

1.1 RELATED DOCUMENTS

A. Documents referred to the DC Government Bid Documents, which include the Solicitation Documents, Contract Sections, Contract Clauses, Special Contract Requirements and Standard Contract Provisions for Use With Specifications for District of Columbia Government Construction Projects (January 2007) are part hereof the same as if repeated herein.

1.2 SUMMARY

A. Section Includes:

1. Fixed, extruded-aluminum and formed-metal louvers.

2. Wall Vents (Brick Vents)

1.3 DEFINITIONS

A. Louver Terminology: Definitions of terms for metal louvers contained in AMCA 501 apply to this Section unless otherwise defined in this Section or in referenced standards.

B. Horizontal Louver: Louver with horizontal blades; i.e., the axes of the blades are horizontal.

C. Vertical Louver: Louver with vertical blades; i.e., the axes of the blades are vertical.

D. Drainable-Blade Louver: Louver with blades having gutters that collect water and drain it to channels in jambs and mullions, which carry it to bottom of unit and away from opening.

E. Storm-Resistant Louver: Louver that provides specified wind-driven rain performance, as determined by testing according to AMCA 500-L.

1.4 PERFORMANCE REQUIREMENTS

A. Structural Performance: Louvers shall withstand the effects of gravity loads and the following loads and stresses within limits and under conditions indicated without permanent deformation of louver components, noise or metal fatigue caused by louver

blade rattle or flutter, or permanent damage to fasteners and anchors. Wind pressures shall be considered to act normal to the face of the building.

1. Wind Loads: Determine loads based on pressures as indicated on Drawings.

B. Thermal Movements: Allow for thermal movements from ambient and surface temperature changes, without buckling, opening of joints, overstressing of components, failure of connections, or other detrimental effects.

1. Temperature Change (Range): 120 deg F, ambient; 180 deg F, material surfaces.

C. Louver Performance Ratings: Provide louvers complying with requirements specified, as demonstrated by testing manufacturer's stock units identical to those provided, except for length and width according to AMCA 500-L.

1.5 SUBMITTALS

A. Product Data: For each type of product indicated.

1. For louvers specified to bear AMCA seal, include printed catalog pages showing specified models with appropriate AMCA Certified Ratings Seals.

B. Shop Drawings: For louvers and accessories. Include plans, elevations, sections, details, and attachments to other work. Show frame profiles and blade profiles, angles, and spacing.

1. Show weep paths, gaskets, flashing, sealant, and other means of preventing water intrusion.
2. Show mullion profiles and locations.

C. Samples for Initial Selection: For units with factory-applied color finishes.

D. Samples for Verification: For each type of metal finish required.

E. Product Test Reports: Based on evaluation of comprehensive tests performed according to AMCA 500-L by a qualified testing agency or by manufacturer and witnessed by a qualified testing agency, for each type of louver and showing compliance with performance requirements specified.

1.6 QUALITY ASSURANCE

A. Source Limitations: Obtain louvers and vents from single source from a single manufacturer where indicated to be of same type, design, or factory-applied color finish.

B. Welding: Qualify procedures and personnel according to the following:

1. AWS D1.2/D1.2M, "Structural Welding Code - Aluminum."
2. AWS D1.3, "Structural Welding Code - Sheet Steel."
3. AWS D1.6, "Structural Welding Code - Stainless Steel."

C. SMACNA Standard: Comply with recommendations in SMACNA's "Architectural Sheet Metal Manual" for fabrication, construction details, and installation procedures.

D. UL and NEMA Compliance: Provide motors and related components for motor-operated louvers that are listed and labeled by UL and comply with applicable NEMA standards.

1.7 PROJECT CONDITIONS

A. Field Measurements: Verify actual dimensions of openings by field measurements before fabrication.

PART 2 - PRODUCTS

2.1 MATERIALS

A. Aluminum Extrusions: ASTM B 221, Alloy 6063-T5, T-52, or T6.

B. Aluminum Sheet: ASTM B 209, Alloy 3003 or 5005 with temper as required for forming, or as otherwise recommended by metal producer for required finish.

C. Aluminum Castings: ASTM B 26/B 26M, Alloy 319.

D. Fasteners: Use types and sizes to suit unit installation conditions.

1. Use hex-head or Phillips pan-head screws for exposed fasteners unless otherwise indicated.
2. For fastening aluminum, use aluminum or 300 series stainless-steel fasteners.
3. For fastening galvanized steel, use hot-dip-galvanized steel or 300 series stainless-steel fasteners.
4. For color-finished louvers, use fasteners with heads that match color of louvers.

E. Postinstalled Fasteners for Concrete and Masonry: Torque-controlled expansion anchors, made from stainless-steel components, with capability to sustain, without failure, a load equal to 4 times the loads imposed, for concrete, or 6 times the load imposed, for masonry, as determined by testing per ASTM E 488, conducted by a qualified independent testing agency.

F. Bituminous Paint: Cold-applied asphalt emulsion complying with ASTM D 1187.

2.2 FABRICATION, GENERAL

A. Assemble louvers in factory to minimize field splicing and assembly. Disassemble units as necessary for shipping and handling limitations. Clearly mark units for reassembly and coordinated installation.

B. Maintain equal louver blade spacing, including separation between blades and frames at head and sill, to produce uniform appearance.

C. Fabricate frames, including integral sills, to fit in openings of sizes indicated, with allowances made for fabrication and installation tolerances, adjoining material tolerances, and perimeter sealant joints.

1. Frame Type: Channel unless otherwise indicated.

D. Include supports, anchorages, and accessories required for complete assembly.

E. Provide vertical mullions of type and at spacings indicated, but not more than recommended by manufacturer, or 72 inches o.c., whichever is less.

1. Fully Recessed Mullions: Where indicated, provide mullions fully recessed behind louver blades. Where length of louver exceeds fabrication and handling limitations, fabricate with close-fitting blade splices designed to permit expansion and contraction.

F. Provide subsills made of same material as louvers or extended sills for recessed louvers.

G. Join frame members to each other and to fixed louver blades with fillet welds concealed from view unless otherwise indicated or size of louver assembly makes bolted connections between frame members necessary.

2.3 FIXED, FORMED-METAL LOUVERS

A. Horizontal, Drainable-Blade Louver:

1. Manufacturers: Subject to compliance with requirements, available manufacturers offering products that may be incorporated into the Work include, but are not limited to, the following:

a. Air Balance Inc.; a Mestek company.
b. Air Flow Company, Inc.
c. Airolite Company, LLC (The).
d. American Warming and Ventilating, Inc.; a Mestek company.
e. Arrow United Industries; a division of Mestek, Inc.
f. Cesco Products; a division of Mestek, Inc.
g. Construction Specialties, Inc.

h. Dowco Products Group; Safe-Air of Illinois, Inc.
i. Greenheck Fan Corporation.
j. Industrial Louvers, Inc.
k. Metal Form Manufacturing Inc.
l. NCA Manufacturing, Inc.
m. Ruskin Company; Tomkins PLC.
n. United Enertech Corp.
o. Vent Products Company, Inc.

2. Louver Depth: 4 inches.
3. Frame and Blade Material and Nominal Thickness: Galvanized-steel sheet, not less than 0.052 inch for frames and 0.040 inch for blades.
4. Mullion Type: Exposed.
5. Louver Performance Ratings:

   a. Free Area: Not less than shown on drawings for mechanical equipment related louvers and 5.0 sq. ft. for attic louvers.
   b. Air Performance: Not more than 0.10-inch wg static pressure drop at 600-fpm free-area exhaust and intake velocity.
   c. Wind-Driven Rain Performance: Not less than 99 percent effectiveness when subjected to a rainfall rate of 3 inches per hour and a wind speed of 29 mph and 8 inches per hour and a wind speed of 50 mph for attic at a core-area intake velocity of 300 fpm.

6. AMCA Seal: Mark units with AMCA Certified Ratings Seal.

2.4 WALL VENTS (BRICK VENTS)

A. Extruded-Aluminum Wall Vents:

1. Manufacturers: Subject to compliance with requirements, available manufacturers offering products that may be incorporated into the Work include, but are not limited to, the following:

   a. Air Flow Company, Inc.
   b. Airolite Company, LLC (The).
   c. Arrow United Industries; a division of Mestek, Inc.
   d. Construction Specialties, Inc.
   e. Dowco Products Group; Safe-Air of Illinois, Inc.
   f. Greenheck Fan Corporation.
   g. Hohmann & Barnard, Inc.
   h. Industrial Louvers, Inc.
   i. Louvers & Dampers, Inc.; a division of Mestek, Inc.
   j. Metal Form Manufacturing Inc.
   k. Nystrom Building Products.

l. Reliable Products, Inc.
m. Ruskin Company; Tomkins PLC.
n. Sunvent Industries; Division of Sylro Sales Corp.
o. United Enertech Corp.

2. Extruded-aluminum louvers and frames, not less than 0.125-inch nominal thickness, assembled by welding; with 18-by-14- mesh, aluminum insect screening on inside face; incorporating weep holes, continuous drip at sill, and integral waterstop on inside edge of sill; of load-bearing design and construction.
3. Dampers: Aluminum blades and frames mounted on inside of wall vents; operated from exterior with Allen wrench in socket-head cap screw. Fabricate operating mechanism from Type 304 stainless-steel components.

2.5 LOUVER SCREENS

A. General: Provide screen at fresh air intake/combustion air and natural ventilation louvers.
   1. Screen Location for Fixed Louvers: Interior face.
   2. Screening Type: Insect screening.

B. Secure screen frames to louver frames with stainless-steel machine screws, spaced a maximum of 6 inches from each corner and at 12 inches o.c.

C. Louver Screen Frames: Fabricate with mitered corners to louver sizes indicated.
   1. Metal: Same kind and form of metal as indicated for louver to which screens are attached.
   2. Finish: Mill finish unless otherwise indicated.
   3. Type: Rewirable frames with a driven spline or insert.

D. Louver Screening for Aluminum Louvers:
   1. Insect Screening: Stainless steel, mesh between ¼ and ½ inch spacing, 0.009-inch wire.

E. Louver Backing at Non-ducted Portions:
   1. Galvanized Steel Sheet Metal: .032” thick.

2.6 FINISHES, GENERAL

A. Comply with NAAMM's "Metal Finishes Manual for Architectural and Metal Products" for recommendations for applying and designating finishes.

2.7 ALUMINUM FINISHES

A. Finish louvers after assembly.

B. Color Anodic Finish: AAMA 611, AA-M12C22A42/A44, Class I, 0.018 mm or thicker.
   1. Color: As selected by COTR from full range of industry colors and color densities.

C. Baked-Enamel or Powder-Coat Finish: AAMA 2603 except with a minimum dry film thickness of 1.5 mils. Comply with coating manufacturer's written instructions for cleaning, conversion coating, and applying and baking finish.
   1. Color and Gloss: As selected by COTR from manufacturer's full range.

2.8 GALVANIZED-STEEL SHEET FINISHES

A. Finish louvers after assembly.

B. Surface Preparation: Clean surfaces with nonpetroleum solvent so surfaces are free of oil and other contaminants. After cleaning, apply a conversion coating suited to the organic coating to be applied over it. Clean welds, mechanical connections, and abraded areas and repair according to ASTM A 780.

C. Baked-Enamel or Powder-Coat Finish: Immediately after cleaning and pretreating, apply manufacturer's standard 2-coat, baked-on finish consisting of prime coat and thermosetting topcoat, with a minimum dry film thickness of 1 mil for topcoat. Comply with coating manufacturer's written instructions for applying and baking to achieve a minimum dry film thickness of 2 mils.
   1. Color and Gloss: As selected by COTR from manufacturer's full range.

PART 3 - EXECUTION

3.1 EXAMINATION

A. Examine substrates and openings, with Installer present, for compliance with requirements for installation tolerances and other conditions affecting performance.

B. Proceed with installation only after unsatisfactory conditions have been corrected.

3.2 PREPARATION

A. Coordinate setting drawings, diagrams, templates, instructions, and directions for installation of anchorages that are to be embedded in concrete or masonry construction. Coordinate delivery of such items to Project site.

3.3 INSTALLATION

A. Locate and place louvers and vents level, plumb, and at indicated alignment with adjacent work.

B. Use concealed anchorages where possible. Provide brass or lead washers fitted to screws where required to protect metal surfaces and to make a weathertight connection. Anchor at masonry joints, not into brick or stone.

C. Form closely fitted joints with exposed connections accurately located and secured.

D. Provide perimeter reveals and openings of uniform width for sealants and joint fillers, as indicated.

E. Repair finishes damaged by cutting, welding, soldering, and grinding. Restore finishes so no evidence remains of corrective work. Return items that cannot be refinished in the field to the factory, make required alterations, and refinish entire unit or provide new units.

F. Protect unpainted galvanized and nonferrous-metal surfaces that will be in contact with concrete, masonry, or dissimilar metals from corrosion and galvanic action by applying a heavy coating of bituminous paint or by separating surfaces with waterproof gaskets or nonmetallic flashing.

G. Install concealed gaskets, flashings, joint fillers, and insulation as louver installation progresses, where weathertight louver joints are required. Comply with Division 7 Section "Joint Sealants" for sealants applied during louver installation.

3.4 ADJUSTING AND CLEANING

A. Test operation of adjustable louvers and adjust as needed to produce fully functioning units that comply with requirements.

B. Clean exposed surfaces of louvers and vents that are not protected by temporary covering, to remove fingerprints and soil during construction period. Do not let soil accumulate during construction period.

C. Before final inspection, clean exposed surfaces with water and a mild soap or detergent not harmful to finishes. Thoroughly rinse surfaces and dry.

D. Restore louvers and vents damaged during installation and construction so no evidence remains of corrective work. If results of restoration are unsuccessful, as determined by COTR, remove damaged units and replace with new units.

1. Touch up minor abrasions in finishes with air-dried coating that matches color and gloss of, and is compatible with, factory-applied finish coating.

END OF SECTION 102000

SECTION 233113 - METAL DUCTS

PART 1 - GENERAL

1.1 RELATED DOCUMENTS

A. Drawings and general provisions of the Contract, including General and Supplementary Conditions and Division 01 Specification Sections, apply to this Section.

B. Documents referred to in **Section C** of the BID DOCUMENTS are part hereof the same as if repeated herein.

1.2 SUMMARY

A. Section Includes:

1. Rectangular ducts and fittings.
2. Round ducts and fittings.
3. Sheet metal materials.
4. Sealants and gaskets.
5. Hangers and supports.
6. Seismic-restraint devices.

B. Related Sections:

1. Division 23 Section "Testing, Adjusting, and Balancing for HVAC" for testing, adjusting, and balancing requirements for metal ducts.

1.3 PERFORMANCE REQUIREMENTS

A. Delegated Duct Design: Duct construction, including sheet metal thicknesses, seam and joint construction, reinforcements, and hangers and supports, shall comply with SMACNA's "HVAC Duct Construction Standards - Metal and Flexible" and performance requirements and design criteria indicated in "Duct Schedule" Article.

B. Airstream Surfaces: Surfaces in contact with the airstream shall comply with requirements in ASHRAE 62.1.

1.4 SUBMITTALS

A. Product Data: For each type of product indicated.

B. Shop Drawings:

1. Fabrication, assembly, and installation, including plans, elevations, sections, components, and attachments to other work.
2. Factory- and shop-fabricated ducts and fittings.
3. Duct layout indicating sizes, configuration, and static-pressure classes.
4. Elevation of top of ducts.
5. Dimensions of main duct runs from building grid lines.
6. Fittings.
7. Reinforcement and spacing.
8. Seam and joint construction.
9. Penetrations through fire-rated and other partitions.
10. Equipment installation based on equipment being used on Project.
11. Locations for duct accessories, including dampers, turning vanes, and access doors and panels.
12. Hangers and supports, including methods for duct and building attachment and vibration isolation.

C. Delegated-Design Submittal:

1. Sheet metal thicknesses.
2. Joint and seam construction and sealing.
3. Reinforcement details and spacing.
4. Materials, fabrication, assembly, and spacing of hangers and supports.

D. Welding certificates.

1.5 QUALITY ASSURANCE

A. Welding Qualifications: Qualify procedures and personnel according to AWS D1.1/D1.1M, "Structural Welding Code - Steel," for hangers and supports. AWS D1.2/D1.2M, "Structural Welding Code - Aluminum," for aluminum supports. AWS D9.1M/D9.1, "Sheet Metal Welding Code," for duct joint and seam welding.]Welding Qualifications: Qualify procedures and personnel according to the following:

1. AWS D1.1/D1.1M, "Structural Welding Code - Steel," for hangers and supports.
2. AWS D1.2/D1.2M, "Structural Welding Code - Aluminum," for aluminum supports.
3. AWS D9.1M/D9.1, "Sheet Metal Welding Code," for duct joint and seam welding.

B. ASHRAE Compliance: Applicable requirements in ASHRAE 62.1, Section 5 - "Systems and Equipment" and Section 7 - "Construction and System Start-Up."

C. ASHRAE/IESNA Compliance: Applicable requirements in ASHRAE/IESNA 90.1, Section 6.4.4 - "HVAC System Construction and Insulation."

PART 2 - PRODUCTS

2.1 RECTANGULAR DUCTS AND FITTINGS

A. General Fabrication Requirements: Comply with SMACNA's "HVAC Duct Construction Standards - Metal and Flexible" based on indicated static-pressure class unless otherwise indicated.

B. Transverse Joints: Select joint types and fabricate according to SMACNA's "HVAC Duct Construction Standards - Metal and Flexible," Figure 2-1, "Rectangular Duct/Transverse Joints," for static-pressure class, applicable sealing requirements, materials involved, duct-support intervals, and other provisions in SMACNA's "HVAC Duct Construction Standards - Metal and Flexible."

C. Longitudinal Seams: Select seam types and fabricate according to SMACNA's "HVAC Duct Construction Standards - Metal and Flexible," Figure 2-2, "Rectangular Duct/Longitudinal Seams," for static-pressure class, applicable sealing requirements, materials involved, duct-support intervals, and other provisions in SMACNA's "HVAC Duct Construction Standards - Metal and Flexible."

D. Elbows, Transitions, Offsets, Branch Connections, and Other Duct Construction: Select types and fabricate according to SMACNA's "HVAC Duct Construction Standards - Metal and Flexible," Chapter 4, "Fittings and Other Construction," for static-pressure class, applicable sealing requirements, materials involved, duct-support intervals, and other provisions in SMACNA's "HVAC Duct Construction Standards - Metal and Flexible."

2.2 ROUND DUCTS AND FITTINGS

A. General Fabrication Requirements: Comply with SMACNA's "HVAC Duct Construction Standards - Metal and Flexible," Chapter 3, "Round, Oval, and Flexible Duct," based on indicated static-pressure class unless otherwise indicated.

1. Manufacturers: Subject to compliance with requirements, available manufacturers offering products that may be incorporated into the Work include, but are not limited to, the following:

a. Lindab Inc.
b. McGill AirFlow LLC.
c. SEMCO Incorporated.
d. Sheet Metal Connectors, Inc.
e. Spiral Manufacturing Co., Inc.

B. Transverse Joints: Select joint types and fabricate according to SMACNA's "HVAC Duct Construction Standards - Metal and Flexible," Figure 3-1, "Round Duct Transverse Joints," for static-pressure class, applicable sealing requirements, materials

involved, duct-support intervals, and other provisions in SMACNA's "HVAC Duct Construction Standards - Metal and Flexible."

1. Transverse Joints in Ducts Larger Than 60 Inches (1524 mm) > in Diameter: Flanged.

C. Longitudinal Seams: Select seam types and fabricate according to SMACNA's "HVAC Duct Construction Standards - Metal and Flexible," Figure 3-2, "Round Duct Longitudinal Seams," for static-pressure class, applicable sealing requirements, materials involved, duct-support intervals, and other provisions in SMACNA's "HVAC Duct Construction Standards - Metal and Flexible."

1. Fabricate round ducts larger Than 90 inches (2286 mm) in diameter with butt-welded longitudinal seams.

D. Tees and Laterals: Select types and fabricate according to SMACNA's "HVAC Duct Construction Standards - Metal and Flexible," Figure 3-5, "90 Degree Tees and Laterals," and Figure 3-6, "Conical Tees," for static-pressure class, applicable sealing requirements, materials involved, duct-support intervals, and other provisions in SMACNA's "HVAC Duct Construction Standards - Metal and Flexible."

2.3 SHEET METAL MATERIALS

A. General Material Requirements: Comply with SMACNA's "HVAC Duct Construction Standards - Metal and Flexible" for acceptable materials, material thicknesses, and duct construction methods unless otherwise indicated. Sheet metal materials shall be free of pitting, seam marks, roller marks, stains, discolorations, and other imperfections.

B. Galvanized Sheet Steel: Comply with ASTM A 653/A 653M.

1. Galvanized Coating Designation: G60 (Z180).
2. Finishes for Surfaces Exposed to View: Mill phosphatized.

C. Carbon-Steel Sheets: Comply with ASTM A 1008/A 1008M, with oiled, matte finish for exposed ducts.

D. Stainless-Steel Sheets: Comply with ASTM A 480/A 480M, Type 304 or 316, as indicated in the "Duct Schedule" Article; cold rolled, annealed, sheet. Exposed surface finish shall be No. 2B, No. 2D, No. 3, or No. 4 as indicated in the "Duct Schedule" Article.

E. Aluminum Sheets: Comply with ASTM B 209 (ASTM B 209M) Alloy 3003, H14 temper; with mill finish for concealed ducts, and standard, one-side bright finish for duct surfaces exposed to view.

F. Reinforcement Shapes and Plates: ASTM A 36/A 36M, steel plates, shapes, and bars; black and galvanized.

1. Where black- and galvanized-steel shapes and plates are used to reinforce aluminum ducts, isolate the different metals with butyl rubber, neoprene, or EPDM gasket materials.

G. Tie Rods: Galvanized steel, 1/4-inch (6-mm) minimum diameter for lengths 36 inches (900 mm) or less; 3/8-inch (10-mm) minimum diameter for lengths longer than 36 inches (900 mm).

2.4 SEALANT AND GASKETS

A. General Sealant and Gasket Requirements: Surface-burning characteristics for sealants and gaskets shall be a maximum flame-spread index of 25 and a maximum smoke-developed index of 50 when tested according to UL 723; certified by an NRTL.

B. Two-Part Tape Sealing System:

1. Tape: Woven cotton fiber impregnated with mineral gypsum and modified acrylic/silicone activator to react exothermically with tape to form hard, durable, airtight seal.
2. Tape Width: 3 inches (76 mm).
3. Sealant: Modified styrene acrylic.
4. Water resistant.
5. Mold and mildew resistant.
6. Maximum Static-Pressure Class: 10-inch wg (2500 Pa), positive and negative.
7. Service: Indoor and outdoor.
8. Service Temperature: Minus 40 to plus 200 deg F (Minus 40 to plus 93 deg C).
9. Substrate: Compatible with galvanized sheet steel (both PVC coated and bare), stainless steel, or aluminum.
10. For indoor applications, use sealant that has a VOC content of 250 g/L or less when calculated according to 40 CFR 59, Subpart D (EPA Method 24).
11. Sealant shall comply with the testing and product requirements of the California Department of Health Services' "Standard Practice for the Testing of Volatile Organic Emissions from Various Sources Using Small-Scale Environmental Chambers."

C. Water-Based Joint and Seam Sealant:

1. Application Method: Brush on.
2. Solids Content: Minimum 65 percent.
3. Shore A Hardness: Minimum 20.
4. Water resistant.
5. Mold and mildew resistant.
6. VOC: Maximum 75 g/L (less water).
7. Maximum Static-Pressure Class: 10-inch wg (2500 Pa), positive and negative.
8. Service: Indoor or outdoor.

9. Substrate: Compatible with galvanized sheet steel (both PVC coated and bare), stainless steel, or aluminum sheets.

D. Flanged Joint Sealant: Comply with ASTM C 920.

1. General: Single-component, acid-curing, silicone, elastomeric.
2. Type: S.
3. Grade: NS.
4. Class: 25.
5. Use: O.
6. For indoor applications, use sealant that has a VOC content of 250 g/L or less when calculated according to 40 CFR 59, Subpart D (EPA Method 24).
7. Sealant shall comply with the testing and product requirements of the California Department of Health Services' "Standard Practice for the Testing of Volatile Organic Emissions from Various Sources Using Small-Scale Environmental Chambers."

E. Flange Gaskets: Butyl rubber, neoprene, or EPDM polymer with polyisobutylene plasticizer.

F. Round Duct Joint O-Ring Seals:

1. Seal shall provide maximum leakage class of 3 cfm/100 sq. ft. at 1-inch wg (0.14 L/s per sq. m at 250 Pa) and shall be rated for 10-inch wg (2500-Pa) static-pressure class, positive or negative.
2. EPDM O-ring to seal in concave bead in coupling or fitting spigot.
3. Double-lipped, EPDM O-ring seal, mechanically fastened to factory-fabricated couplings and fitting spigots.

2.5 HANGERS AND SUPPORTS

A. Hanger Rods for Noncorrosive Environments: Cadmium-plated steel rods and nuts.

B. Hanger Rods for Corrosive Environments: Electrogalvanized, all-thread rods or galvanized rods with threads painted with zinc-chromate primer after installation.

C. Strap and Rod Sizes: Comply with SMACNA's "HVAC Duct Construction Standards - Metal and Flexible," Table 5-1 (Table 5-1M), "Rectangular Duct Hangers Minimum Size," and Table 5-2, "Minimum Hanger Sizes for Round Duct."

D. Steel Cables for Galvanized-Steel Ducts: Galvanized steel complying with ASTM A 603.

E. Steel Cables for Stainless-Steel Ducts: Stainless steel complying with ASTM A 492.

F. Steel Cable End Connections: Cadmium-plated steel assemblies with brackets, swivel, and bolts designed for duct hanger service; with an automatic-locking and clamping device.

G. Duct Attachments: Sheet metal screws, blind rivets, or self-tapping metal screws; compatible with duct materials.

H. Trapeze and Riser Supports:

1. Supports for Galvanized-Steel Ducts: Galvanized-steel shapes and plates.
2. Supports for Stainless-Steel Ducts: Stainless-steel shapes and plates.
3. Supports for Aluminum Ducts: Aluminum or galvanized steel coated with zinc chromate.

PART 3 - EXECUTION

3.1 DUCT INSTALLATION

A. Drawing plans, schematics, and diagrams indicate general location and arrangement of duct system. Indicated duct locations, configurations, and arrangements were used to size ducts and calculate friction loss for air-handling equipment sizing and for other design considerations. Install duct systems as indicated unless deviations to layout are approved on Shop Drawings and Coordination Drawings.

B. Install ducts according to SMACNA's "HVAC Duct Construction Standards - Metal and Flexible" unless otherwise indicated.

C. Install round ducts in maximum practical lengths.

D. Install ducts with fewest possible joints.

E. Install factory- or shop-fabricated fittings for changes in direction, size, and shape and for branch connections.

F. Unless otherwise indicated, install ducts vertically and horizontally, and parallel and perpendicular to building lines.

G. Install ducts close to walls, overhead construction, columns, and other structural and permanent enclosure elements of building.

H. Install ducts with a clearance of 1 inch (25 mm), plus allowance for insulation thickness.

I. Route ducts to avoid passing through transformer vaults and electrical equipment rooms and enclosures.

J. Where ducts pass through non-fire-rated interior partitions and exterior walls and are exposed to view, cover the opening between the partition and duct or duct insulation with sheet metal flanges of same metal thickness as the duct. Overlap openings on four sides by at least 1-1/2 inches (38 mm).

K. Where ducts pass through fire-rated interior partitions and exterior walls, install fire dampers. Comply with requirements in Division 23 Section "Air Duct Accessories" for fire and smoke dampers.

L. Protect duct interiors from moisture, construction debris and dust, and other foreign materials. Comply with SMACNA's "IAQ Guidelines for Occupied Buildings Under Construction," Appendix G, "Duct Cleanliness for New Construction Guidelines."

3.2 INSTALLATION OF EXPOSED DUCTWORK

A. Protect ducts exposed in finished spaces from being dented, scratched, or damaged.

B. Trim duct sealants flush with metal. Create a smooth and uniform exposed bead. Do not use two-part tape sealing system.

C. Grind welds to provide smooth surface free of burrs, sharp edges, and weld splatter. When welding stainless steel with a No. 3 or 4 finish, grind the welds flush, polish the exposed welds, and treat the welds to remove discoloration caused by welding.

D. Maintain consistency, symmetry, and uniformity in the arrangement and fabrication of fittings, hangers and supports, duct accessories, and air outlets.

E. Repair or replace damaged sections and finished work that does not comply with these requirements.

3.3 DUCT SEALING

A. Seal ducts for duct static-pressure, seal classes, and leakage classes specified in "Duct Schedule" Article according to SMACNA's "HVAC Duct Construction Standards - Metal and Flexible."

B. Seal ducts to the following seal classes according to SMACNA's "HVAC Duct Construction Standards - Metal and Flexible":

1. Comply with SMACNA's "HVAC Duct Construction Standards - Metal and Flexible."
2. Outdoor, Supply-Air Ducts: Seal Class A.
3. Outdoor, Exhaust Ducts: Seal Class C.
4. Outdoor, Return-Air Ducts: Seal Class C.
5. Unconditioned Space, Supply-Air Ducts in Pressure Classes 2-Inch wg (500 Pa) and Lower: Seal Class B.

6. Unconditioned Space, Supply-Air Ducts in Pressure Classes Higher Than 2-Inch wg (500 Pa): Seal Class A.
7. Unconditioned Space, Exhaust Ducts: Seal Class C.
8. Unconditioned Space, Return-Air Ducts: Seal Class B.
9. Conditioned Space, Supply-Air Ducts in Pressure Classes 2-Inch wg (500 Pa) and Lower: Seal Class C.
10. Conditioned Space, Supply-Air Ducts in Pressure Classes Higher Than 2-Inch wg (500 Pa): Seal Class B.
11. Conditioned Space, Exhaust Ducts: Seal Class B.
12. Conditioned Space, Return-Air Ducts: Seal Class C.

3.4 HANGER AND SUPPORT INSTALLATION

A. Comply with SMACNA's "HVAC Duct Construction Standards - Metal and Flexible," Chapter 5, "Hangers and Supports."

B. Building Attachments: Concrete inserts, powder-actuated fasteners, or structural-steel fasteners appropriate for construction materials to which hangers are being attached.

1. Where practical, install concrete inserts before placing concrete.
2. Install powder-actuated concrete fasteners after concrete is placed and completely cured.
3. Use powder-actuated concrete fasteners for standard-weight aggregate concretes or for slabs more than 4 inches (100 mm) thick.
4. Do not use powder-actuated concrete fasteners for lightweight-aggregate concretes or for slabs less than 4 inches (100 mm) thick.
5. Do not use powder-actuated concrete fasteners for seismic restraints.

C. Hanger Spacing: Comply with SMACNA's "HVAC Duct Construction Standards - Metal and Flexible," Table 5-1 (Table 5-1M), "Rectangular Duct Hangers Minimum Size," and Table 5-2, "Minimum Hanger Sizes for Round Duct," for maximum hanger spacing; install hangers and supports within 24 inches (610 mm) of each elbow and within 48 inches (1200 mm) of each branch intersection.

D. Hangers Exposed to View: Threaded rod and angle or channel supports.

E. Support vertical ducts with steel angles or channel secured to the sides of the duct with welds, bolts, sheet metal screws, or blind rivets; support at each floor and at a maximum intervals of 16 feet (5 m).

F. Install upper attachments to structures. Select and size upper attachments with pull-out, tension, and shear capacities appropriate for supported loads and building materials where used.

3.5 CONNECTIONS

A. Make connections to equipment with flexible connectors complying with Division 23 Section "Air Duct Accessories."

B. Comply with SMACNA's "HVAC Duct Construction Standards - Metal and Flexible" for branch, outlet and inlet, and terminal unit connections.

3.6 DUCT CLEANING

A. Clean new and existing duct system(s) before testing, adjusting, and balancing.

B. Use service openings for entry and inspection.

1. Create new openings and install access panels appropriate for duct static-pressure class if required for cleaning access. Provide insulated panels for insulated or lined duct. Patch insulation and liner as recommended by duct liner manufacturer. Comply with Division 23 Section "Air Duct Accessories" for access panels and doors.
2. Disconnect and reconnect flexible ducts as needed for cleaning and inspection.
3. Remove and reinstall ceiling to gain access during the cleaning process.

C. Particulate Collection and Odor Control:

1. When venting vacuuming system inside the building, use HEPA filtration with 99.97 percent collection efficiency for 0.3-micron-size (or larger) particles.
2. When venting vacuuming system to outdoors, use filter to collect debris removed from HVAC system, and locate exhaust downwind and away from air intakes and other points of entry into building.

D. Clean the following components by removing surface contaminants and deposits:

1. Air outlets and inlets (registers, grilles, and diffusers).
2. Supply, return, and exhaust fans including fan housings, plenums (except ceiling supply and return plenums), scrolls, blades or vanes, shafts, baffles, dampers, and drive assemblies.
3. Air-handling unit internal surfaces and components including mixing box, coil section, air wash systems, spray eliminators, condensate drain pans, humidifiers and dehumidifiers, filters and filter sections, and condensate collectors and drains.
4. Coils and related components.
5. Return-air ducts, dampers, actuators, and turning vanes except in ceiling plenums and mechanical equipment rooms.
6. Supply-air ducts, dampers, actuators, and turning vanes.
7. Dedicated exhaust and ventilation components and makeup air systems.

E. Mechanical Cleaning Methodology:

1. Clean metal duct systems using mechanical cleaning methods that extract contaminants from within duct systems and remove contaminants from building.
2. Use vacuum-collection devices that are operated continuously during cleaning. Connect vacuum device to downstream end of duct sections so areas being cleaned are under negative pressure.
3. Use mechanical agitation to dislodge debris adhered to interior duct surfaces without damaging integrity of metal ducts, duct liner, or duct accessories.
4. Clean fibrous-glass duct liner with HEPA vacuuming equipment; do not permit duct liner to get wet. Replace fibrous-glass duct liner that is damaged, deteriorated, or delaminated or that has friable material, mold, or fungus growth.
5. Clean coils and coil drain pans according to NADCA 1992. Keep drain pan operational. Rinse coils with clean water to remove latent residues and cleaning materials; comb and straighten fins.
6. Provide drainage and cleanup for wash-down procedures.
7. Antimicrobial Agents and Coatings: Apply EPA-registered antimicrobial agents if fungus is present. Apply antimicrobial agents according to manufacturer's written instructions after removal of surface deposits and debris.

3.7 START UP

A. Air Balance: Comply with requirements in Division 23 Section "Testing, Adjusting, and Balancing for HVAC."

3.8 DUCT SCHEDULE

A. Exhaust Ducts:

1. Ducts Connected to Fans Exhausting (ASHRAE 62.1, Class 1 and 2) Air:

   a. Pressure Class: Negative1-inch wg (250 Pa).
   b. Minimum SMACNA Seal Class: A if negative pressure, and A if positive pressure.
   c. SMACNA Leakage Class for Rectangular: 12 >.
   d. SMACNA Leakage Class for Round and Flat Oval: 6 >.

2. Ducts Connected to Equipment Not Listed Above:

   a. Pressure Class: Positive or negative 2-inch wg (500 Pa).
   b. Minimum SMACNA Seal Class: A if negative pressure, and A if positive pressure.
   c. SMACNA Leakage Class for Rectangular: 12.
   d. SMACNA Leakage Class for Round and Flat Oval: 6.

B. Elbow Configuration:

1. Rectangular Duct: Comply with SMACNA's "HVAC Duct Construction Standards - Metal and Flexible," Figure 4-2, "Rectangular Elbows."

   a. Velocity 1000 fpm (5 m/s) or Lower:

      1) Radius Type RE 1 with minimum 0.5 radius-to-diameter ratio.
      2) Mitered Type RE 4 without vanes.

   b. Velocity 1000 to 1500 fpm (5 to 7.6 m/s):

      1) Radius Type RE 1 with minimum 1.0 radius-to-diameter ratio.
      2) Radius Type RE 3 with minimum 0.5 radius-to-diameter ratio and two vanes.
      3) Mitered Type RE 2 with vanes complying with SMACNA's "HVAC Duct Construction Standards - Metal and Flexible," Figure 4-3, "Vanes and Vane Runners," and Figure 4-4, "Vane Support in Elbows."

   c. Velocity 1500 fpm (7.6 m/s) or Higher:

      1) Radius Type RE 1 with minimum 1.5 radius-to-diameter ratio.
      2) Radius Type RE 3 with minimum 1.0 radius-to-diameter ratio and two vanes.
      3) Mitered Type RE 2 with vanes complying with SMACNA's "HVAC Duct Construction Standards - Metal and Flexible," Figure 4-3, "Vanes and Vane Runners," and Figure 4-4, "Vane Support in Elbows."

2. Rectangular Duct: Comply with SMACNA's "HVAC Duct Construction Standards - Metal and Flexible," Figure 4-2, "Rectangular Elbows."

   a. Radius Type RE 1 with minimum 1.5 radius-to-diameter ratio.
   b. Radius Type RE 3 with minimum 1.0 radius-to-diameter ratio and two vanes.
   c. Mitered Type RE 2 with vanes complying with SMACNA's "HVAC Duct Construction Standards - Metal and Flexible," Figure 4-3, "Vanes and Vane Runners," and Figure 4-4, "Vane Support in Elbows."

3. Round Duct: Comply with SMACNA's "HVAC Duct Construction Standards - Metal and Flexible," Figure 3-4, "Round Duct Elbows."

   a. Minimum Radius-to-Diameter Ratio and Elbow Segments: Comply with SMACNA's "HVAC Duct Construction Standards - Metal and Flexible," Table 3-1, "Mitered Elbows." Elbows with less than 90-degree change of direction have proportionately fewer segments.

1) Velocity 1000 fpm (5 m/s) or Lower: 0.5 radius-to-diameter ratio and three segments for 90-degree elbow.
2) Velocity 1000 to 1500 fpm (5 to 7.6 m/s): 1.0 radius-to-diameter ratio and four segments for 90-degree elbow.
3) Velocity 1500 fpm (7.6 m/s) or Higher: 1.5 radius-to-diameter ratio and five segments for 90-degree elbow.
4) Radius-to Diameter Ratio: 1.5.

b. Round Elbows, 12 Inches (305 mm) and Smaller in Diameter: Stamped or pleated.
c. Round Elbows, [14 Inches (356 mm)]<Insert dimension> and Larger in Diameter: Standing seam.

C. Branch Configuration:

1. Rectangular Duct: Comply with SMACNA's "HVAC Duct Construction Standards - Metal and Flexible," Figure 4-6, "Branch Connection."

a. Rectangular Main to Rectangular Branch: 45-degree entry.
b. Rectangular Main to Round Branch: Spin in.

2. Round: Comply with SMACNA's "HVAC Duct Construction Standards - Metal and Flexible," Figure 3-5, "90 Degree Tees and Laterals," and Figure 3-6, "Conical Tees." Saddle taps are permitted in existing duct.

a. Velocity 1000 fpm (5 m/s) or Lower: 90-degree tap.
b. Velocity 1000 to 1500 fpm (5 to 7.6 m/s): Conical tap.
c. Velocity 1500 fpm (7.6 m/s) or Higher: 45-degree lateral.

END OF SECTION 233113

ARCHITECTURAL ABBREVIATIONS

@	AT
ABV.	ABOVE
AC.	ACOUSTIC(AL)
A/C	AIR CONDITIONING
ACC.	ACCESS
ACT	ACOUSTICAL TILE
AD	AREA DRAIN
ADA	AMERICANS WITH DISABILITIES ACT
ADD.	ADDENDUM
ADH.	ADHESIVE
ADJ.	ADJACENT, ADJUSTABLE
AFF	ABOVE FINISHED FLOOR
AGG.	AGGREGATE
ALT.	ALTERNATE
ALUM.	ALUMINUM
ANOD.	ANODIZED
APPROX.	APPROXIMATE
ARCH.	ARCHITECT, ARCHITECTURAL
ASSBLY.	ASSEMBLY
ATTEN.	ATTENUATION
AUTO.	AUTOMATIC
BARR.	BARRIER
BBF	BOX-BOX-FILE
BC	BRICK COURSE
BD.	BOARD
BEL.	BELOW
BETW.	BETWEEN
BITUM.	BITUMINOUS
BLDG.	BUILDING
BLK.	BLOCK
BLKG.	BLOCKING
BLKHD.	BULKHEAD
BM.	BEAM
BOT.	BOTTOM
BRG.	BEARING
BRG.PL.	BEARING PLATE
BRK.	BRICK
BRZ.	BRONZE
BSMT.	BASEMENT
BTU	BRITISH THERMAL UNIT
BTW.	BETWEEN
C/AT	CONCEALED SPLINE, ACOUSTIC TILE
CAB.	CABINET
CEM.	CEMENT
CER.	CERAMIC
CF	CUBIC FOOT
CLG.	CEILING
C & G	CURB AND GUTTER
CH	CEILING HEIGHT
CHBD.	CHALKBOARD
CHR	CHAIR
CIR.	CIRCLE
CIRC.	CIRCUMFERENCE
CJ	CONTROL JOINT
CL.	CLOSET/CENTER LINE
CLK, CLKG.	CAULK, CAULKING
CLR.	CLEAR, CLEARANCE
CMU	CONCRETE MASONRY UNIT
CNTR.	COUNTER
CO	CLEAN OUT
COL.	COLUMN
COMB.	COMBINATION
CONC.	CONCRETE
COMM.	COMMUNICATIONS
COMP.	COMPRESSIBLE, (ED), (ION), (IBLE), COMPOSITION
CMPSN.	COMPOSITION (COMPOSITE)
COMPT.	COMPARTMENT
CONC.	CONCRETE
CND.	CONDUIT
CONN.	CONNECTION
CONST.	CONSTRUCTION
CONT.	CONTINUOUS OR CONTINUE
CONTR.	CONTRACT, CONTRACTOR
COR	CONTRACTING OFFICER'S REPRSENTATIVE
CORR.	CORRIDOR, CORRUGATED
CRS.	COURSE(S)
CT	CERAMIC TILE
CTR.	CENTER, COUNTER
CU	COPPER
CURT.W.	CURTAIN WALL
CY	CUBIC YARD
CYL.	CYLINDER
D	DEPTH, DRAIN
DB.	DECIBEL
DEMO	DEMOLISH, DEMOLITION
DEPT.	DEPARTMENT
DET.	DETAIL
DF	DRINKING FOUNTAIN
DH	DOUBLE HUNG
DIA.	DIAMETER
DIAG.	DIAGONAL
DIM.	DIMENSION
DISP.	DISPOSAL
DIV.	DIVISION
DL	DEAD LOAD
DN.	DOWN
DP.	DAMPPROOFING
DPR.	DAMPER
DR.	DOOR
DS	DOWNSPOUT
DT	DRAIN TILE
DWG.	DRAWING
DWR.	DRAWER
E	EAST
EA.	EACH
EF	EXHAUST FAN
EJ	EXPANSION JOINT
EL.	ELEVATION
ELEC.	ELECTRIC(AL)
ELEV.	ELEVATOR
EMERG.	EMERGENCY
ENCL.	ENCLOSE(URE)
EPB	ELECTRIC PANELBOARD
EP	ELECTRIC PANEL
EQ.	EQUAL

EQUIP.	EQUIPMENT
EPS	EXPANDED POLYSTYRENE
ESMT.	EASEMENT
EST.	ESTIMATE
ETR	EXISTING TO REMAIN
EWC	ELECTRIC WATER COOLER
EXH.	EXHAUST
EXP.	EXPANSION, EXPOSED
EXP.JT	EXPANSION JOINT
EXT.	EXTERIOR
EXTG.	EXISTING
(E)	EXISTING
EX	EXISTING
EXIST	EXISTING
FA	FIRE ALARM
FB	FACE BRICK
FBD.	FIBERBOARD
FBO	FURNISHED BY OTHERS
FC	FILE CABINET
FD	FLOOR DRAIN, FIRE DAMPER
FDN.	FOUNDATION
FE	FIRE EXTINGUISHER
FEC	FIRE EXTINGUISHER CABINET
FFE	FINISHED FLOOR ELEVATION
FF	FINISH FLOOR
FF EL	FINISH FLOOR ELEVATION
FFL	FINISHED FLOOR LINE
FGL.	FIBERGLASS
FIN.	FINISH, FINISHED
FIXT.	FIXTURE
FL.AM.A.	FLAMMABLE
FLASH.	FLASHING
FL.CO	FLOOR CLEANOUT
FLEX.	FLEXIBLE
FLR.	FLOOR(ING)
FLUOR.	FLUORESCENT
FLX.	FLEXIBLE
FPRF.	FIREPROOF
FPL	FLOOR PLATE
FRMG.FRAME (D), (ING)	
FR	FIRE RESISTANT
FRC	FIRE-RESISTANT COATING
FRT	FIRE-RETARDANT
FTG	FOOTING
FUT.	FUTURE
GA.	GAGE
GALV.	GALVANIZED
GB	GRAB BAR
GC	GENERAL CONTRACT(OR)
GCMU	GLAZED CONCRETE MASONRY UNITS
GD.	GRADE, GRADING, GUARD
GEN.	GENERATOR
GF	GROUND FACE
GL.	GLASS
GOV'T.	GOVERNMENT
GR.	GRADE
GVL.	GRAVEL
GRND.	GROUND
GT.	GROUT
GWB	GYPSUM WALL BOARD
GWB-P	GYPSUM WALL BOARD W/ PAINT
GYP.	GYPSUM
HB	HOSE BIB
HC	HANDICAPPED
HD	HEAVY DUTY
HDBD.	HARDBOARD
HDO	HIGH DENSITY OVERLAY PLYWD.
HDR.	HEADER
HDW.	HARDWARE
HDWD.	HARDWOOD
HEX.	HEXAGONAL
HGT. or H	HEIGHT
HH	HEAD HEIGHT
HK.	HOOK(S)
HM	HOLLOW METAL
HO	HOLD OPEN
HOM	HOMOSOTE
HORIZ.	HORIZONTAL
HTG.	HEATING
HVAC	HEATING, VENTILATING, AIR CONDITIONING
HWH	HOT WATER HEATER
ID	INSIDE DIAMETER
INCL.	INCLUDE, INCLUSIVE
INSUL.A.	INSULATION
INT.	INTERIOR
INTMD.	INTERMEDIATE
INV.	INVERT
ISOL.	ISOLATION
JAN.	JANITOR
JC	JANITOR'S CLOSET
JF	JOINT FILTER
JT.	JOINT
KIT.	KITCHEN
KO	KNOCKOUT
KPL.	KICKPLATE
L	LENGTH
LAB.	LABORATORY
LAD.	LADDER
LAM.	LAMINATE(D)
LAT.	LATERAL
LAV.	LAVATORY
LB.	POUNDS
LBL.	LABEL
LC	LEAD COATED
LF	LINEAR FOOT
LH	LEFT HAND
LL	LIVE LOAD
LLV	LONG LEG VERTICAL
LNTL.	LINTEL
LOC.	LOCATION
LP	LIGHT POLE
LT.	LIGHT
LTWT	LIGHT WEIGHT
LVR.	LOUVER
LWC	LIGHTWEIGHT CONCRETE

M	METER
MACH.	MACHINE
MAS.	MASONRY
MATL.	MATERIAL
MAX.	MAXIMUM
MBR.	MEMBER
MC	MECHANICAL CONTRACTOR
MDO	MEDIUM DENSITY OVERLAY PLYWOOD
MEAS.	MEASUREMENT
MECH.	MECHANIC(AL)
MED.	MEDIUM
MEMB.	MEMBRANE
MET.	METAL
MEZZ.	MEZZANINE
MFR.	MANUFACTURE(ER)
MGT.	MANAGEMENT
MGR.	MANAGER
MH	MANHOLE
MIN.	MINIMUM
MIR.	MIRROR
MISC.	MISCELLANEOUS
M/L	MATCH LINE
MLDG.	MOLDING, MOULDING
MLWK.MILLWORK.	
MMB.	MEMBRANE
MO	MASONRY OPENING
MOD.	MODULAR
MOV.	MOVABLE
MR	MOISTURE RESISTANT
MTD.	MOUNTED(ED), (ING)
MTL.	METAL
MTN.DET.	MOTION DETECTOR
MULL.	MULLION
MWK	MILLWORK
N	NORTH
N/A	NOT APPLICABLE
NAT.	NATURAL
NEC.	NECESSARY
NI.	NICKEL
NIC	NOT IN CONTRACT
NO	NUMBER
NOM.	NOMINAL
NON.COMB.	NON-COMBUSTIBLE
NR	NOISE REDUCTION
NRC	NOISE REDUCTION COEFFICIENT
NTS	NOT TO SCALE
OA	OVERALL, OUTSIDE AIR
OB.	OBSCURE
OC	ON CENTER
OD	OUTSIDE DIAMETER
OFF.	OFFICE
OPG.	OPENING
OPP.	OPPOSITE
OPP.HND	OPPOSITE HAND
ORIG.	ORIGINAL
OVHD.	OVERHEAD
P, P*	PAINT, PAINT COLOR
PAR.	PARALLEL
PART.BD	PARTICLE BOARD
PAVMT.	PAVEMENT
PB	PANELBOARD
PC	PORTLAND CEMENT
PCC	PRECAST CONCRETE
PCF	POUNDS PER CUBIC FOOT
PED.	PEDESTAL
PERF.	PERFORATE(D)
PERIM.	PERIMETER
PFL	POUNDS PER LINEAL FOOT
PKG.	PARKING, PACKAGE
PL	PROPERTY LINE, PLATE
PLAM	PLASTIC LAMINATE
PLAS.	PLASTER
PLYWD.	PLYWOOD
PLUMB.	PLUMBING
PM	PAINTED METAL
PNL.	PANEL
PNT.	PAINT(ED)
PR.	PAIR
PREP.	PREPARE, PREPARATION
PROP.	PROPOSED
PROT.	PROTECTION
PSF	POUNDS PER SQUARE FOOT
PSI	POUNDS PER SQUARE INCH
PT.	POINT
PTD.	PAPER TOWEL DESPENSER, PAINTED
PTN.	PARTITION
PTR	PAPER TOWEL RECEPTOR
PVC	POLYVINYL CHLORIDE
PVMT.	PAVEMENT
QT	QUARRY TILE
QTY.	QUANTITY
R	RISER
RA	RETURN AIR
RAD.	RADIUS
RBC	RUBBER BASE COVED
RBS	RUBBER BASE STRAIGHT
RBT	RUBBER TILE
RCP	REINFORCED CONCRETE PIPE
RD	ROOF DRAIN
REC.	RECESSED
REF.	REFER, REFERENCE
REFL.	REFLECTED (IVE)(OR)
REFR.	REFRIGERATED, REFRIGERATOR
REG.	REGISTER
REINF.	REINFORCED(ING)
REM.	REMOVE
REQ'D.	REQUIRED
RESIL.	RESILIENT
RET.	RETURN, RETAINING
REV.	REVISION(S), REVISED
RFG.	ROOFING
RFL.	REFLECT(ED), (IVE), (OR)
RH	RIGHT HAND

RLG.	RAIL(ING)
RM.	ROOM
RO	ROUGH OPENING
ROW	RIGHT OF WAY
RR	RAILROAD
RS	RUBBLE STONE
RT.	RIGHT
RVS.	REVERSE
RVT.	RIVET
S	SOUTH
SAN.	SANITARY
SAT	SUSPENDED ACOUSTICAL TILE CEILING
SAP	SUSPENDED ACOUSTICAL PANEL CEILING
SC	SOLID CORE
SCHED.	SCHEDULE
SCN.	SCREEN
SD	STORM DRAIN
SEC.	SECURITY
SECT.	SECTION
SERV.	SERVICE
SF	SQUARE FOOT
SFGL.	SAFETY GLASS
SG	SHEET GLASS
SHT.	SHEET
SIM.	SIMILAR
SP	SOUNDPROOF
SPEC.	SPECIFICATION(S)
SPKR.	SPEAKER
SQ.	SQUARE
SS	SILL HEIGHT
SS	SERVICE SINK
S.STL	STAINLESS STEEL
STA.	STATION
STD.	STANDARD
STD'S.	STUDS
STG.	SEATING
STL	STEEL
STOR.	STORAGE
STRUCT.	STRUCTURE, STRUCTURAL
SUSP.	SUSPENDED
SW	SOLID CORE WOOD (DOOR)
SYM.	SYMMETRY (ICAL)
SYS.	SYSTEM
T	TREAD
TC	TREAD COVER
T/	TOP OF
T/S	TOP OF SLAB
T/W	TOP OF WALL
T/FTG.	TOP OF FOOTING
T & G	TONGUE AND GROOVE
TEL.	TELEPHONE
TEMP.	TEMPERED, TEMPORARY
THK. or T	THICK(NESS)
TKBD.	TACKBOARD
TME	TO MATCH EXISTING
TOIL.	TOILET
TOL.	TOLERANCE
TP	TOILET PAPER
TPD.	TOILET PAPER DISPENSER
TPTN	TOILET PARTITION
TW	TILE WAINSCOT
TYP.	TYPICAL
UL	UNDERWRITERS LABORATORIES
UNFIN.	UNFINISHED
UNO	UNLESS NOTED OTHERWISE
UTIL.	UTILITY
UR.	URINAL
VARN.	VARNISH
VB	VAPOR BARRIER
VB	VINYL BASE
VBC. or S.	VINYL BASE COVED OR STRAIGHT
VERT.	VERTICAL
VEST.	VESTIBULE
VIF	VERIFY IN FIELD
VIN.	VINYL
VJ	V-JOINT(ED)
VT	VINYL TILE
W	WIDE FLANGE
W	WEST, WIDTH, WIDE
W/	WITH
W/O	WITHOUT
WC	WATER CLOSET
WD.	WOOD
WDP.	WOOD PANEL (DOOR)
WDW.	WINDOW
WH	WALL HUNG
WI	WROUGHT IRON
WND.	WINDOW
WMT	WATER METER
WM	WIRE MESH
WP	WATERPROOFING
WPFG.	WATER PROOFING
WR	WATER REPELLENT
WT.	WEIGHT
WTR.	WATER
WTRPRF.	WATERPROOF
WWF	WELDED WIRE FABRIC

(0505.03-esabbrev-a)

NTS

DEFINITIONS*

A. DEMO: DETACH ITEMS FROM EXISTING CONSTRUCTION AND LEGALLY DISPOSE OF OFF-SITE.

B. REMOVE AND SALVAGE: DETACH ITEMS FROM EXISTING CONSTRUCTION AND DELIVER THEM TO THE CONTRACTING OFFICER READY FOR REUSE.

C. REMOVE AND REINSTALL: DETACH ITEMS FROM EXISTING CONSTRUCTION, PREPARE FOR REUSE, AND REINSTALL WHERE INDICATED.

D. EXISTING TO REMAIN: EXISTING ITEMS OF CONSTRUCTION THAT ARE NOT TO BE REMOVED AND THAT ARE NOT OTHERWISE INDICATED TO BE REMOVED, REMOVED AND SALVAGED, OR REMOVED AND REINSTALLED.

E. "FURNISH": SUPPLY, DELIVER TO PROJECT SITE, AND UNLOAD.

F. "INSTALL": UNLOAD, ASSEMBLE, AND ERECT, COMPLETE AND READY FOR THE INTENDED USE.

G. "PROVIDE": FURNISH AND INSTALL.

* SEE MP0.1 FOR DEFINITIONS RELATING TO MECHANICAL AND PLUMBING WORK
SEE E0.1 FOR SYMBOL SUBSCRIPTS RELATING TO DEMOLITION, RESTORATION & NEW WORK

(0505.03-esdfns-a)

ARCHITECTURAL GENERAL NOTES

1. DRAWING ACCURACY: LOCATIONS AND SIZES OF EXISTING BUILDING ELEMENTS WERE OBTAINED THROUGH LIMITED FIELD OBSERVATION AND REVIEW OF AVAILABLE EXISTING RECORDS. VERIFY ALL EXISTING CONDITIONS AND DIMENSIONS PRIOR TO START OF CONSTRUCTION. WHEN ANY DISCREPANCY OR CONFLICT IS DETECTED NOTIFY THE COR IMMEDIATELY AND PRIOR TO COMENCING WORK.

2. SEE SPECIFICATION FOR CUTTING AND PATCHING AND SELECTIVE DEMOLITION FOR WORK NOT NECESSARILY SHOWN ON THE DRAWINGS.

(0505.03-bsgenotes-a)

ARCHITECTURAL SYMBOL KEY

NUM / CUT | DRW — BUILDING SECTION, SHT DRAWN ON, SHT CUT ON
NUM / DRW — BUILDING SECTION, SHT DRAWN ON
NUM / CUT | DRW — DETAIL/SECTION, SHT DRAWN ON, SHT CUT ON
NUM / DRW — PLAN, SHT DRAWN ON
INTERIOR ELEVATION
SHT NO.
REVISION
DEMO NOTES
NEW WORK NOTES
ASSEMBLY TYPE SEE SHEET AB6.1
PHOTO KEY
RADIATORS
COLUMN GRID LINE
DEMO AREA
DEMO DOOR
DEMO WALL
NEW CERAMIC WALL TILE
NORTH — NORTH ARROW
XXX — ROOM NUMBER
XXX — DOOR LABEL
XXX — WINDOW LABEL
ELEVATION IN SECTION & ELEVATION
PLAN - SPOT ELEVATION
PL — PROPERTY LINE
℄ — CENTER LINE
EXISTING FENCE LINE
ALIGN
CONCRETE/ MORTAR
STEEL
MASONRY: CMU, BRICK
FINISH WOOD
FRAMING LUMBER
PLYWOOD
NEW FINISH AREA
NEW WALL
NEW LOW WALL
ETR
GLASS
TEMPERED GLASS
AREA OF FLOOR WORK (ENTIRE ROOM).
AREA OF FLOOR WORK (SPOT REPAIR)

(0505.03-essymbol-a)

DEMO NOTES

GENERAL: THROUGHOUT BLDG DEMO E. LIGHT FIXTURES & SUPPORTS TO CEILING SURFACE FOR SUSPENDED FIXTURES. DEMO WALL & CEILING MOUNTED FIXTURES TO FINISH SURFACE.

1. DEMO TELEPHONE SHELF.
2. DEMO EXIST STUD WALL.
3. REMOVE WINDOW FRAME, SASH AND SCREEN FROM OPENING. RETAIN STONE SILL IN-PLACE.
4. DEMO STUD & GWB BETWEEN BRICK WALLS. TOP OF NEW OPENING EVEN WITH BEAM IN ROOM 010 (APPROX. 8' AFF IN ROOM 010).
5. REMOVE AND SALVAGE FAN
6. REMOVE ELECTRIC LIGHTING AND COMMUNICATIONS EQUIPMENT
7. DEMO VT. FLOORING TO WOOD FLOOR IN PREP. FOR NEW VT. FLOORING.
8. REMOVE ASBESTOS CONTAINING INSULATION FROM EXPOSED PIPES. REINSULATE.
9. DEMO FLOOR FINISH TO WOOD FLOOR IN PREPARATION FOR TILE FLOOR.
10. DEMO CEILING. CEILING BOARD CONTAINS ASBESTOS.
11. DEMO MASONRY INFILL WALL FULL WIDTH OF STAIRWAY & HEIGHT FROM FLOOR TO BOTTOM OF 2ND FLOOR LANDING.
12. SEE MECH, ELEC, FIREPROTECTION DRAWINGS FOR PIPING, EQUIPMENT, ELECTRICAL LINES & FIXTURES TO BE DEMOLISHED, FOR LOCATIONS OF NEW LINES, EQUIPMENT AND FIXTURES.
13. DEMO EXIST. DOOR & FRAME.
14. DEMO TOILET FIXTURES.
15. DEMO EXISTING GYP. BD IN PREP FOR TILE. SEE ELEVATIONS.
16. REMOVE 2 VENDING MACHINES WITH FLOOR ATTACHMENT BRACKETS FROM LOBBY 105. REINSTALL IN ROOM 104A.
17. DEMO STUD WALL FULL WIDTH OF STAIRWAY & HEIGHT TO ALLOW INSTALLATION OF BEAM ABOVE NEW STOREFRONT WALL (SEE STRUCTURAL FOR BEAM SIZING, & DOOR SCHEDULE FOR STOREFRONT DIMENSIONS.)
18. CLEAN OUT EXIST. DUCT DURING MECHANICAL WORK.
19. DEMO EXIST. RUBBER TREAD COVER & PLYWOOD FILLER. SEE 1/A4.2
20. DEMO WALL TO ENLARGE OPENING. SEE MB-2 FOR SIZE.
21. REMOVE RADIATOR & REMOVE PAINT FROM RADIATOR. STORE RADIATOR FOR REINSTALLATION DURING NEW WORK. CLEAN FLOOR OR CEILING AT RADIATOR.
22. REMOVE AND SALVAGE FIRE EXTINGUISHER AND CABINET.
23. REMOVE AND SALVAGE WALL SIGNS IN LOBBY AND ENTRY 106 & 106A.

1

(0505.03-esabbrev-a)

NEW WORK NOTES

GENERAL: THROUGHOUT BLDG PROVIDE NEW LIGHT FIXTURES. SEE ELECTRICAL SHEETS FOR FIXTURE TYPES & LOCATIONS.

1. REPAIR PLASTER AT DAMAGED AREAS AND AREAS MODIFIED FOR/BY CONSTRUCTION WORK. REPAINT. SEE DTLS 1 & 2/AB6.1
2. PREPARE SURFACE & REPAINT @ AREAS WHERE ELEC. & MECH. FIXTURES, CONDUIT & BOXES ARE REMOVED.
3. NOT USED.
4. REMOVE AND REINSTALL OPEN GRILL SUSPENDED CEILING AS NEEDED TO ACCOMMODATE WORK.
5. REPAIR DAMAGED GWB AND GWB AREAS MODIFIED BY/FOR CONSTRUCTION WORK. SEE DETAIL 5-AB6.1
6. PROVIDE ACOUSTICAL CEILING TILES WHERE DAMAGED. SET IN EXISTING METAL SUPPORT.
7. PROVIDE NEW FILE CABINET.
8. NOT USED.
9. PROVIDE LOUVER. SEE DETAIL 1-AB6.3 SEE ELECTRICAL & MECHANICAL.
10. REMOVE BLUE TILES & PROVIDE CERAMIC TILE TO PATCH THE WALL. MATCH EXISTING TILE COLOR AND PATTERN.
11. PAINT CAST IRON STAIR, RISERS AND STRINGERS.
12. REMOVE AND REINSTALL KITCHEN EQUIPMENT TO ACCOMMODATE NEW VINYL TILE FLOORING INSTALLED.
13. PROVIDE NEW TREAD COVERS, ALL STEPS. SEE DETAIL 7-AB4.2
14. PROVIDE NEW SECURITY GRILL WITH HINGED ACCESS DOOR AND LATCH. SEE DETAIL 2-AB6.3
15. REMOVED BROKEN/CRACKED VINYL TILE AND PROVIDE NEW. PROVIDE NEW FOR AREAS MISSING TILE. SEE DTL. 4/AB6.1
16. REATTACH, REPAIR LOOSE AND CRACKED GWB CEILING AREAS. FOR PLASTER CEILING SEE DETAIL 1-AB6.1. FOR GWB CEILING SEE DETAIL 1-AB6.1 SIM.
16A. PROVIDE NEW GWB AT CEILING TO ESTABLISH REQUIRED FIRE SEPARATION. PROVIDE FIRESTOPPING AT GAPS. SEE DETAIL 6-AB6.1
17. PROVIDE NEW GWB AT WALL TO ESTABLISH REQUIRED FIRE SEPARATION. PROVIDE FIRESTOPPING AT GAPS.
18. REPAIR DETERIORATED WOOD FLOOR AT RADIATORS/COOLING UNIT.
19. REMOVE PLYWOOD PATCHES IN WOOD FLOORS. PROVIDE WOOD FLOORING TO MATCH EXIST. T&G WD. FLOOR.
20. REFINISH WOOD FLOOR.
21. PROVIDE R-30 INSULATION BETWEEN ROOF RAFTERS WHERE MISSING.
22. PROVIDE & ATTACH NETTING TO BOTTOM OF RAFTERS & FRAMING MEMBERS TO SUPPORT INSULATION THROUGHOUT ATTIC.
23. LOCATION OF NEW BACKFLOW PREVENTERS (SEE MECHANICAL & FIRE PROTECTION).
24. SEE MECHANICAL DRAWINGS FOR LOCATION & DETAILS FOR DRIP PAN UNDER STEAM LINE.
25. REMOVE ASBESTOS CONTAINING CLG. BOARD. REPLACE GWB CEILING. SEE DETAIL 6-AB6.1
26. RELOCATE EXISTING CEILING HUNG STEAM RADIATOR AND PROVIDE INFILL IN STUD WALL OPENING.
27. PROVIDE NEW UTILITY SINK & ASSOCIATED PLUMBING. SEE PLUMBING
28. PROVIDE NEW CHECK IN FURNITURE
29. PROVIDE NEW LAVATORY W/ SOLID SURFACE COUNTER.
30. PROVIDE NEW ACCESSIBLE TOILET FIXTURES & ACCESSORIES (SEE INTERIOR ELEVATIONS).
31. PROVIDE FRAMING AT AREA ABOVE SHOWER FOR TILE CEILING @ 8'-0" AFF.
32. RUN DRAINPIPE FROM NEW GUTTER ALONG BRACKET & DOWN BRICK PIER.
33. PROVIDE CONCRETE SPLASH BLOCK. ENSURE DRAINAGE TO GRASS & AWAY FROM BUILDING.
34. NEW MASONRY INFILL WALL
35. PROVIDE NEW DOOR & FRAME. SEE DOOR SCHEDULE.
36. PROVIDE BIRD SCREENING AT DISCHARGE OUTSIDE BUILDING.
37. PROVIDE BULLETIN BOARD.
38. PROVIDE VT. FLOORING.
39. PROVIDE TILE FLOOR.
40. PROVIDE LOUVER FOR MECHANICAL EXHAUST. SEE MB-2
41. PROVIDE NEW PIPING FOR SHOWER VENT. CONNECT TO EXISTING VENTING SYSTEM. PIPE TO BE EXPOSED AND PAINTED.
42. PAINT & REINSTALL RADIATOR. REFER TO MECH. FOR FURTHER INSTRUCTION.
43. PROVIDE FIRE EXTINGUISHER AND CABINET.

1

FINAL

REVISION	DATE	DESCRIPTION	BY	APP.
1	11/16/10	NOTES ADDED	BC	RS

DESIGNED RS
DRAWN BC
CHECKED RW

CERTIFICATION

DISTRICT OF COLUMBIA — JOHN R. FRANKLIN — No.4616 — REGISTERED ARCHITECT

CHIEF DESIGN & ENGINEERING DIVISION

DATE _____

REGISTRATION NO. 4616
DATE __OCT 1989__

ARCHITECT
architrave p.c., architects
WASHINGTON, DC 20003

NOTES, SYMBOLS AND ABBREVIATIONS

ARCHITECTURAL

RENOVATION AT TWO SHELTERS
BLAIR SHELTER
635 I STREET, NE

GOVERNMENT OF THE DISRICT OF COLUMBIA
DEPARTMENT OF REAL ESTATE SERVICES

DRAWING NO.
AB0.1

PROJECT NO. PL101C-HS-017
BLDG. NO. 593
DATE: 10/11/2010
SHEET 02 OF 42

1"=10' | 1"=20' | 1"=50' | 1'=100' | 1"=200' | 1"=400' | 3"=1'-0" | 11/2"=1'-0" | 1"=1'-0" | 3/4"=1'-0" | 1/2"=1'-0" | 3/8"=1'-0" | 1/4"=1'-0" | 3/16"=1'-0" | 1/8"=1'-0" | 3/32"=1'-0" | 1/16"=1'-0" | 1/16"=1'-0"

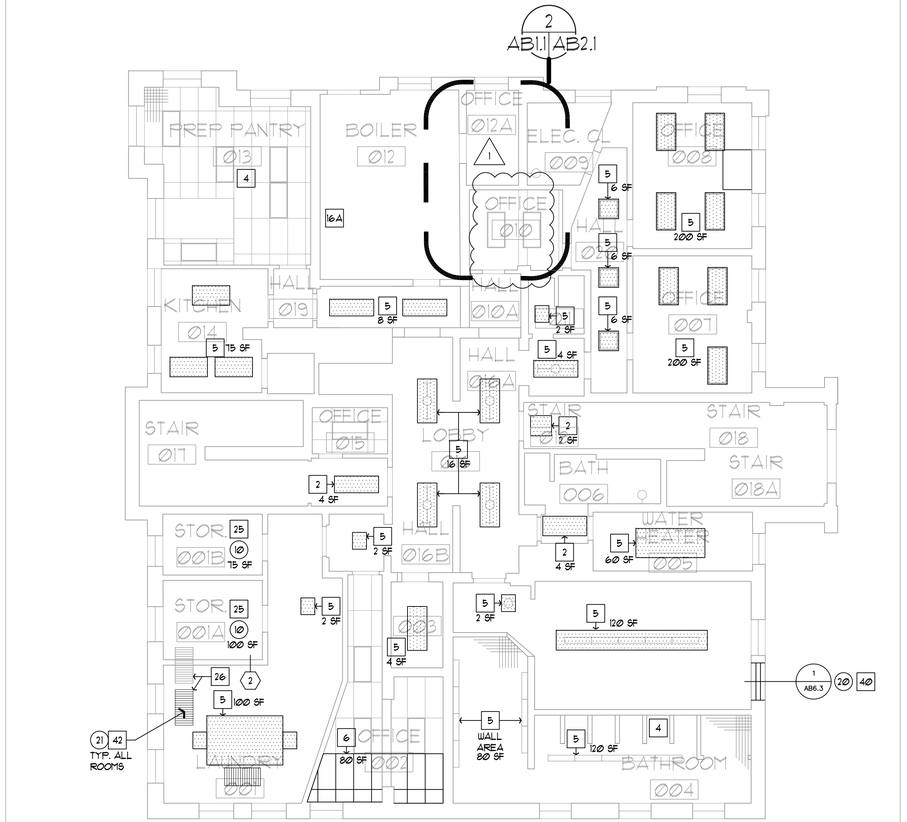

1 AB1.1 BASEMENT REFLECTED CEILING PLAN

(#0505.14b1/ab1.1/gaddl)

SCALE: 1/8" = 1'-0"

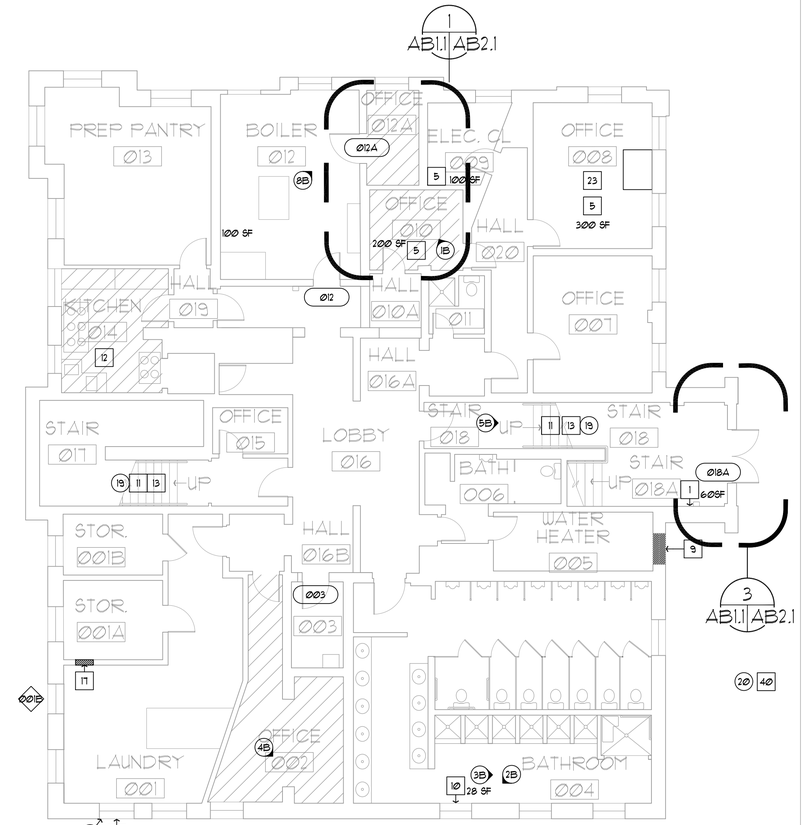

2 AB1.1 BASEMENT PLAN

(#0505.14b1/ab1.1/gaddl)

SCALE: 1/8" = 1'-0"

FINAL

	DESIGNED RS				
	DRAWN BC	1	11/15/10	BEAM SHOWN ON RCP	BC	RS
	CHECKED RW	REVISION	DATE	DESCRIPTION	BY	APP.
	CERTIFICATION	BASEMENT PLANS			ARCHITECTURAL	
	DISTRICT OF COLUMBIA JOHN R. FRANKLIN No.4616 REGISTERED ARCHITECT	RENOVATION AT TWO SHELTERS BLAIR SHELTER 635 I STREET, NE			DRAWING NO. AB1.1	
CHIEF DESIGN & ENGINEERING DIVISION DATE _____	REGISTRATION NO. 4616 DATE OCT 1989 ARCHITECT architrave p.c., architects WASHINGTON, DC 20003	GOVERNMENT OF THE DISRICT OF COLUMBIA DEPARTMENT OF REAL ESTATE SERVICES			PROJECT NO. PL101C-HS-017 BLDG. NO. 593 DATE: 10/11/2010 SHEET 03 OF 42	

1"=10' | 1"=20' | 1"=50' | 1'=100' | 1"=200' | 1"=400' | 3"=1'-0" | 11/2"=1'-0" | 1"=1'-0" | 3/4"=1'-0" | 1/2"=1'-0" | 3/8"=1'-0" | 1/4"=1'-0" | 3/16"=1'-0" | 1/8"=1'-0" | 3/32"=1'-0" | 1/16"=1'-0"

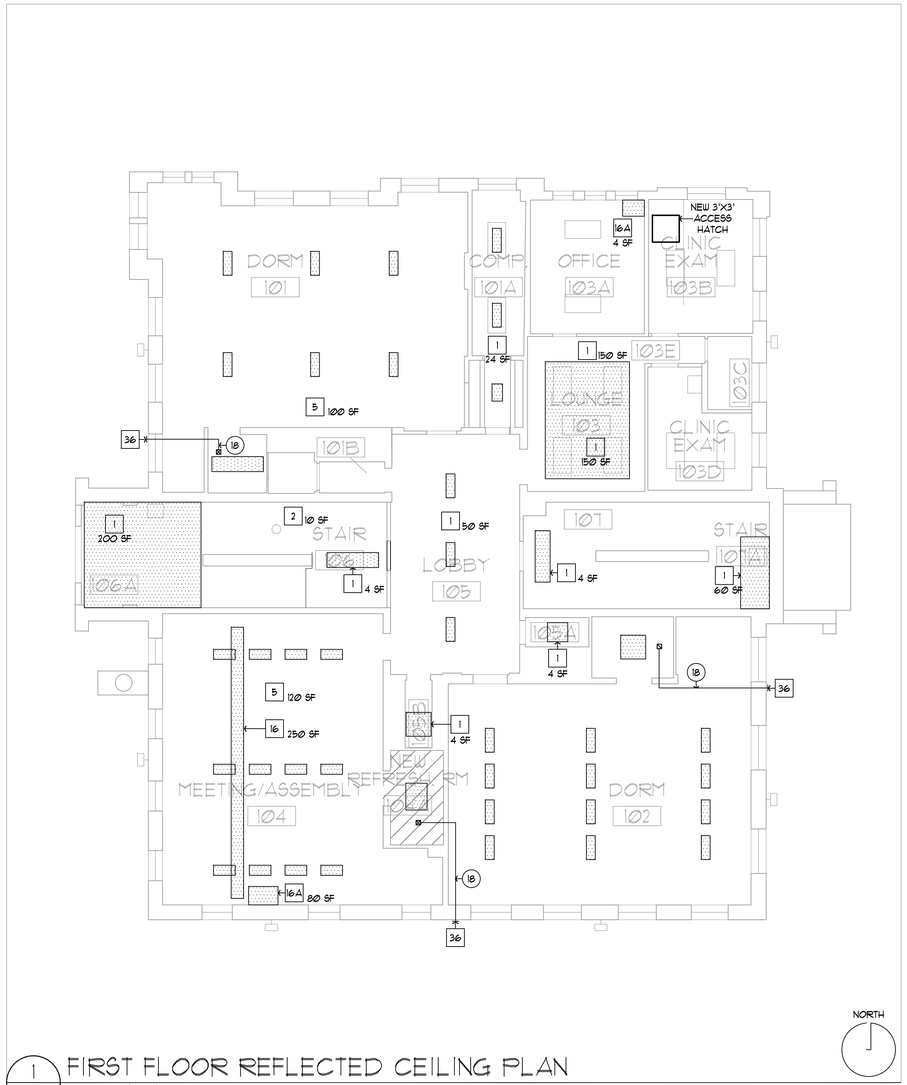

1 AB1.2 FIRST FLOOR REFLECTED CEILING PLAN

(#0505.14b1\$ab1.1\$addl)

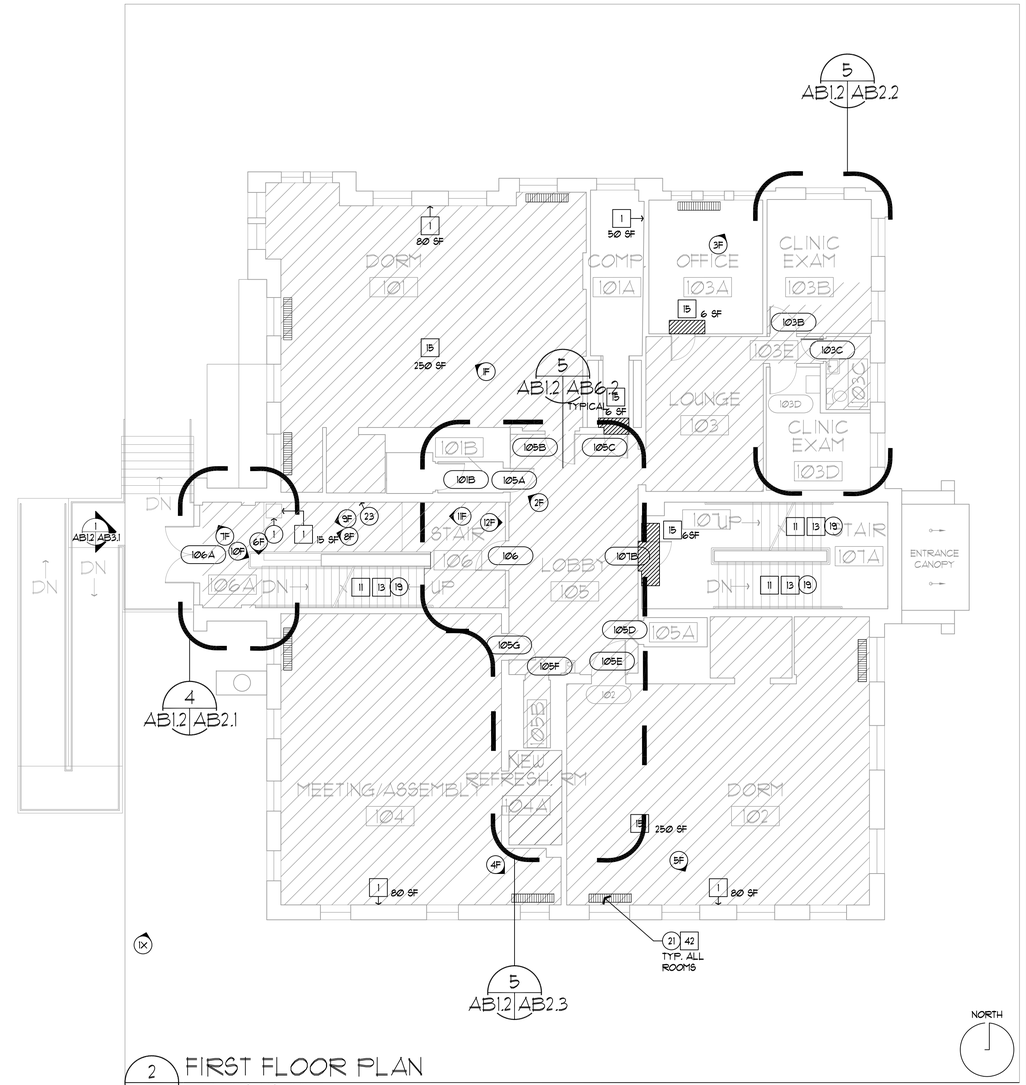

2 AB1.2 FIRST FLOOR PLAN

(#0505.14b1\$ab1.1\$addl)

FINAL

DESIGNED RS					
DRAWN BC	1	11/29/10	NOTE 23 ADDED	BC	RS
CHECKED RW	REVISION	DATE	DESCRIPTION	BY	APP.

CERTIFICATION

DISTRICT OF COLUMBIA
JOHN R. FRANKLIN
No.4616
REGISTERED ARCHITECT

FIRST FLOOR PLANS

ARCHITECTURAL

RENOVATION AT TWO SHELTERS
BLAIR SHELTER
635 I STREET, NE

DRAWING NO.

AB1.2

CHIEF DESIGN & ENGINEERING DIVISION

DATE _____

REGISTRATION NO. 4616
DATE OCT 1989

ARCHITECT
architrave p.c., architects
WASHINGTON, DC 20003

GOVERNMENT OF THE DISRICT OF COLUMBIA
DEPARTMENT OF REAL ESTATE SERVICES

PROJECT NO. PL101C-HS-017
BLDG. NO. 593
DATE: 10/11/2010
SHEET 04 OF 42

1"=10' | 1"=20' | 1"=50' | 1'=100' | 1"=200' | 1"=400' | 3"=1'-0" | 11/2"=1'-0" | 1"=1'-0" | 3/4"=1'-0" | 1/2"=1'-0" | 3/8"=1'-0" | 1/4"=1'-0" | 3/16"=1'-0" | 1/8"=1'-0" | 3/32"=1'-0" | 1/16"=1'-0" | 1/16"=1'-0"

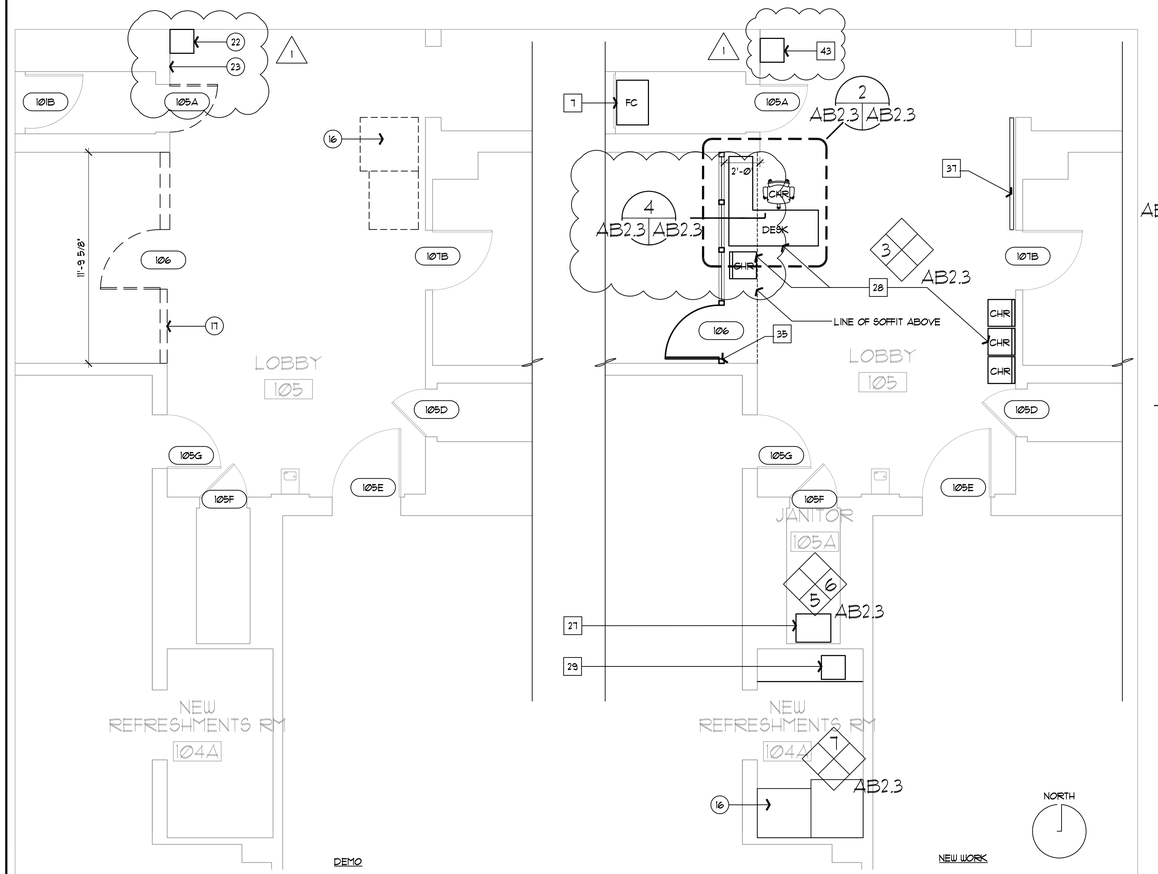

1 FIRST FLOOR LOBBY PLAN
AB1.2 | AB2.3 (#0505.14b1/8ab2.3 1/8addl)
SCALE: 1/4" = 1'-0"

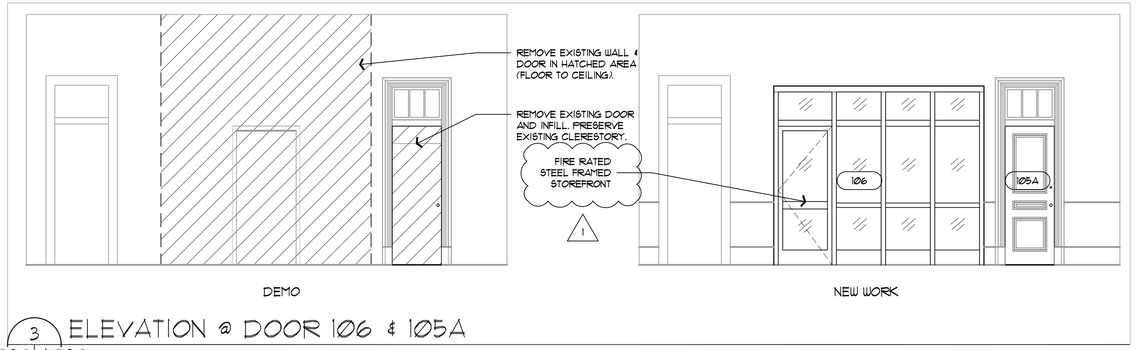

3 ELEVATION @ DOOR 106 & 105A
AB2.3 | AB2.3
SCALE: 1/4" = 1'-0"

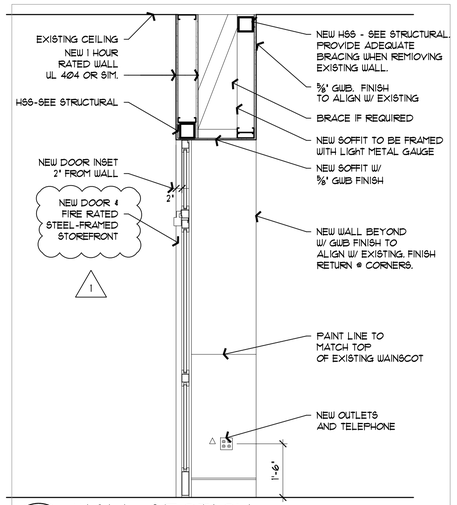

4 WALL SECTION
B2.3 | AB2.3
SCALE: 1/2"=1'-0"

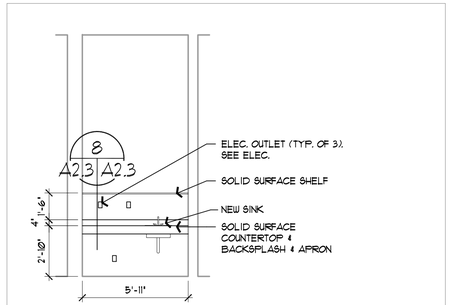

7 NEW REFRESHMENT RM 104A
A2.3 | A2.3
SCALE: 1/4"=1'-0"

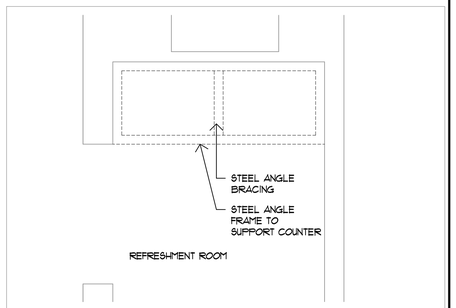

9 COUNTER FRAMING PLAN
AB2.3 (#0505.14b1/8ab2.3 1/8addl)
SCALE: 1/2"=1'-0"

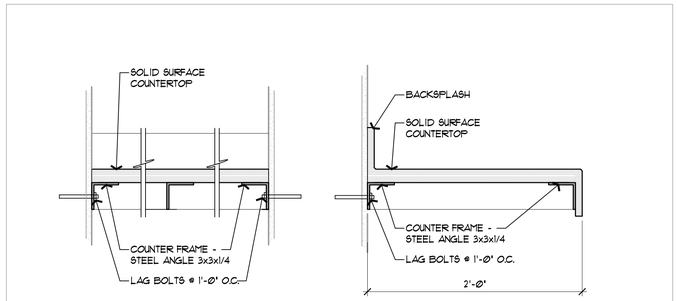

8 COUNTER - SECTION DETAILS
B2.3 | AB2.3 (#0505.14b1/8ab2.3 1/8addl)
SCALE: 1-1/2" = 1'-0"

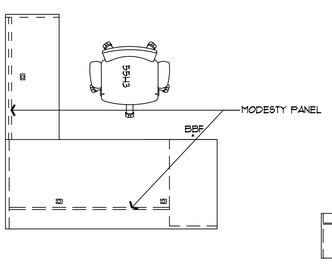

FURNITURE LEGEND:

- DESK CHAIR
- MOBILE PEDESTAL, BOX/BOX/FILE (BBF)
- MODULAR FURNITURE - WOOD BRIDGE, 42"W X 18"D
- MODULAR FURNITURE - WOOD DESK, 72"W X 30"D (BBF)

FURNITURE NOTES:

1. THE CONTRACTOR SHALL BE RESPONSIBLE FOR FIELD VERIFYING EXISTING CONDITIONS PRIOR TO BEGINNING WORK AND DURING THE PROGRESS OF WORK SHALL VERIFY ALL CRITICAL DIMENSIONS. ANY DEVIATION FROM DIMENSIONS INDICATED ON DRAWINGS SHALL BE APPROVED BY THE COTR.
2. THE RECEPTION DESK WORKSTATION WAS DESIGNED USING THE KNOLL MAGNUSSON PRODUCT LINE. THE FURNITURE PROCURED SHALL BE THIS PRODUCT LINE OR EQUAL. THE FURNITURE MANUFACTURER SHALL BE ON GSA SCHEDULE. THE OFFICE FURNITURE SHALL BE WOOD VENEER OR ALL WOOD. MULTIPLE COMPONENTS AND VARIOUS SIZES SHALL BE AVAILABLE TO PROVIDE A MODULAR WORKSTATION WITH RETURN.
3. DO NOT SCALE DRAWINGS. WRITTEN DIMENSIONS SHALL TAKE PRECEDENCE OVER ANY SCALED DIMENSIONS. ALL DIMENSIONS ARE TO FINISH SIDE OF WORK.
4. ALL INSTALLATIONS SHALL BE PERFORMED WITHIN STRICT ACCORDANCE WITH THE MATERIAL, EQUIPMENT, AND/OR APPLIANCE MANUFACTURERS' SPECIFICATIONS.
5. REFER TO SPECIFICATIONS SECTIONS DIVISION 12 FOR WOOD OFFICE FURNITURE, LATERAL FILES, AND DESK CHAIRS FOR ADDIITONAL INFORMATION.

2 DESK DETAIL
B2.3 | AB2.3 (#0505.14b1/8ab2.3 1/8addl)
SCALE: 1/2" = 1'-0"

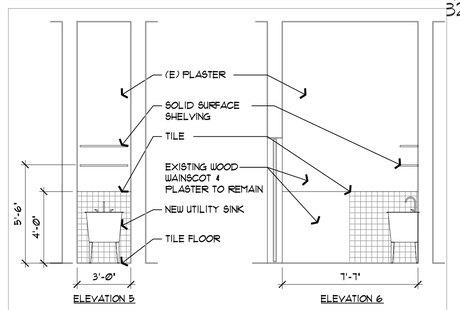

5&6 JANITOR'S CLOSET
A2.3 | A2.3
SCALE: 1/4"=1'-0"

FINAL

DESIGNED RS					
DRAWN BC	1	11/15/10	WALL SECTION IDENTIFIED, NOTES ADDED	BC	RS
CHECKED RW	REVISION	DATE	DESCRIPTION	BY	APP.

CERTIFICATION

DISTRICT OF COLUMBIA — JOHN R. FRANKLIN — No.4616 — REGISTERED ARCHITECT

ENLARGED PLANS & ELEVATIONS

ARCHITECTURAL

DRAWING NO. AB2.3

RENOVATION AT TWO SHELTERS
BLAIR SHELTER
635 I STREET, NE

CHIEF DESIGN & ENGINEERING DIVISION
DATE _____

REGISTRATION NO. 4616
DATE __ OCT 1989 __
ARCHITECT
architrave p.c., architects
WASHINGTON, DC 20003

GOVERNMENT OF THE DISRICT OF COLUMBIA
DEPARTMENT OF REAL ESTATE SERVICES

PROJECT NO. PL101C-HS-017
BLDG. NO. 593
DATE: 10/11/2010
SHEET OF 42

1"=10' | 1"=20' | 1"=50' | 1'=100' | 1"=200' | 1"=400' | 3"=1'-0" | 11/2"=1'-0" | 1"=1'-0" | 3/4"=1'-0" | 1/2"=1'-0" | 3/8"=1'-0" | 1/4"=1'-0" | 3/16"=1'-0" | 1/8"=1'-0" | 3/32"=1'-0" | 1/16"=1'-0" | 1/160"=1'-0"

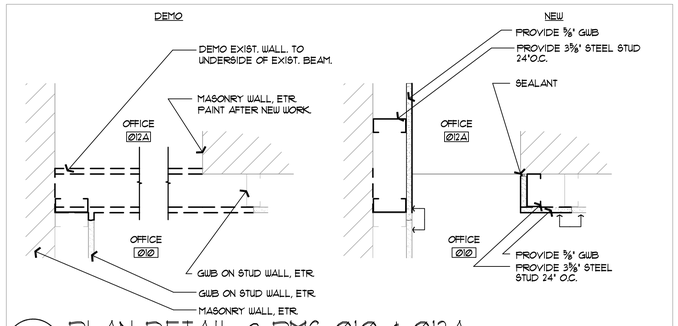

2 PLAN DETAIL @ RMS Ø10 & Ø12A
AB2.1 | AB4.1 (*Ø505.14b1/8ab4.1 1/8addl)
SCALE: 1-1/2" = 1'-Ø"

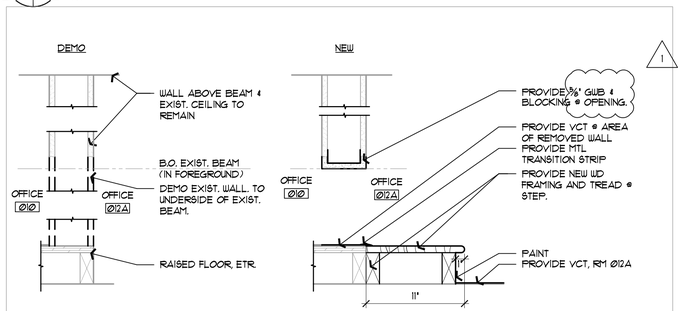

3 OPENING BETWEEN RMS Ø10 & Ø12A
AB2.1 | AB4.1 (*Ø505.14b1/8ab4.1 1/8addl)
SCALE: 1-1/2" = 1'-Ø"

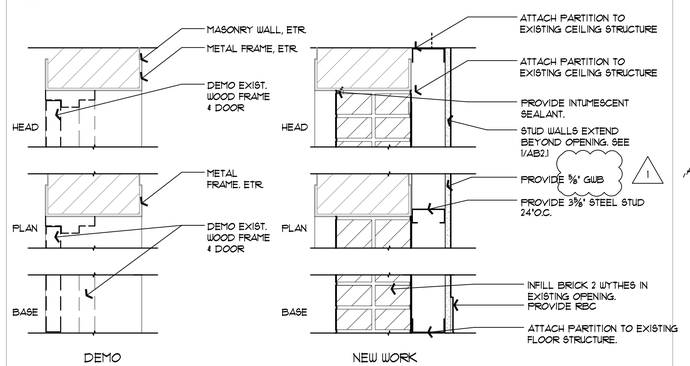

4 EXIST. OPENING INFILL
AB2.1 | AB4.1
SCALE: 1 1/2" = 1'-Ø"

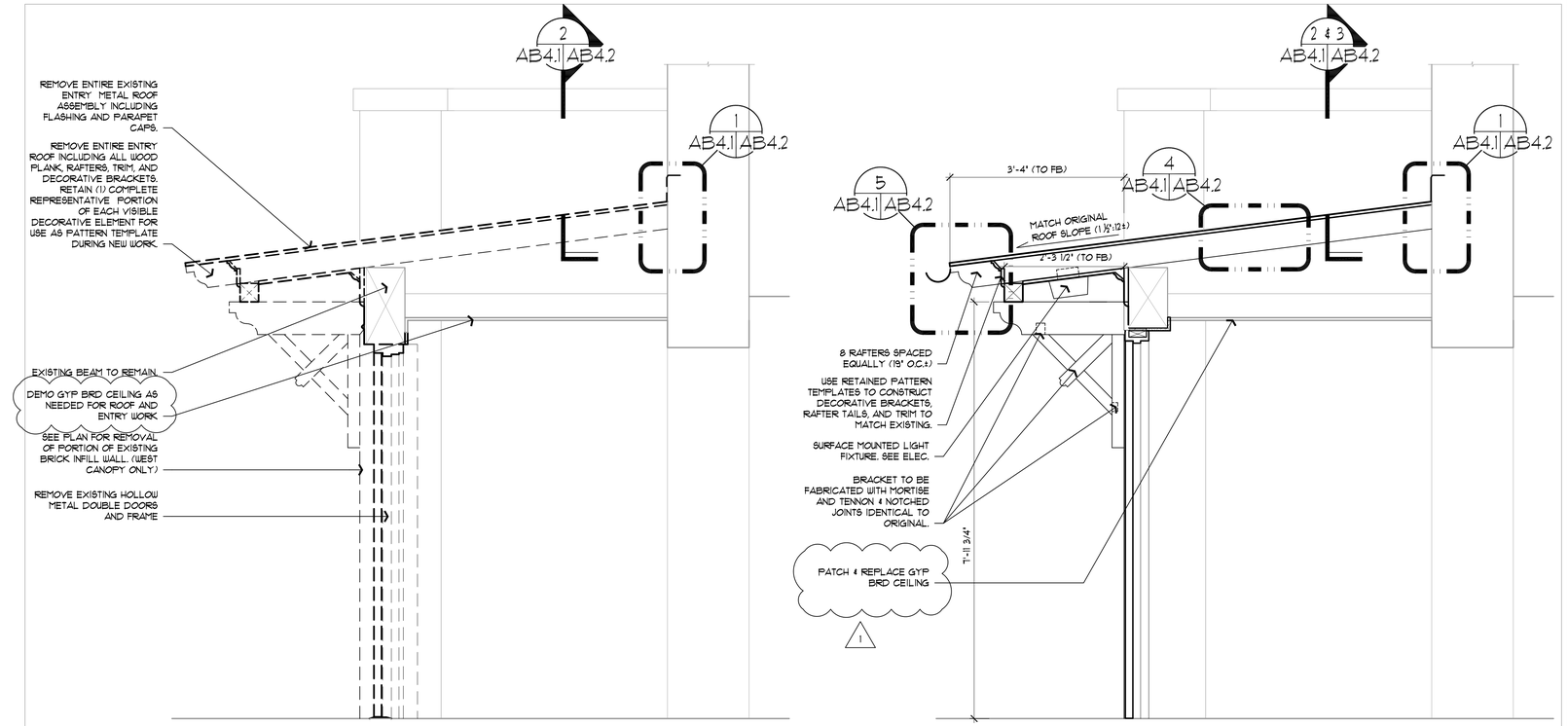

1 ENTRY CANOPY SECTION
AB2.1 | AB4.1 (*Ø505.14b1/8ab4.1 1/8addl)
SCALE: 3/4" = 1'-Ø"

FINAL

DESIGNED RS					
DRAWN NP	1	11/15/10	CHANGED GYP BRD NOTES	BC	RS
CHECKED RW	REVISION	DATE	DESCRIPTION	BY	APP.

CERTIFICATION

DISTRICT OF COLUMBIA — JOHN R. FRANKLIN — No.4616 — REGISTERED ARCHITECT

SECTIONS

ARCHITECTURAL

RENOVATION AT TWO SHELTERS
BLAIR SHELTER
635 I STREET, NE

DRAWING NO. AB4.1

CHIEF DESIGN & ENGINEERING DIVISION

DATE _____

REGISTRATION NO. 4616
DATE ___ OCT. 1989 ___

ARCHITECT
architrave p.c., architects
WASHINGTON, DC 20003

GOVERNMENT OF THE DISRICT OF COLUMBIA
DEPARTMENT OF REAL ESTATE SERVICES

PROJECT NO. PL101C-HS-017
BLDG. NO. 593
DATE: 10/11/2010
SHEET 10 OF 42

1"=10' | 1"=20' | 1"=50' | 1'=100' | 1"=200' | 1"=400' | 3"=1'-0" | 11/2"=1'-0" | 1"=1'-0" | 3/4"=1'-0" | 1/2"=1'-0" | 3/8"=1'-0" | 1/4"=1'-0" | 3/16"=1'-0" | 1/8"=1'-0" | 3/32"=1'-0" | 1/16"=1'-0" | 1/16"=1'-0"

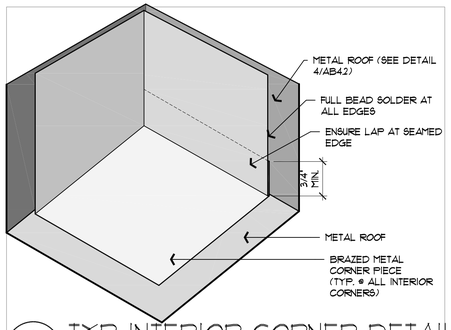

6 TYP INTERIOR CORNER DETAIL
3 4.2 | AB4.2 (@05@5.14b1/8ab42 1/8addl)
SCALE: N.T.S.

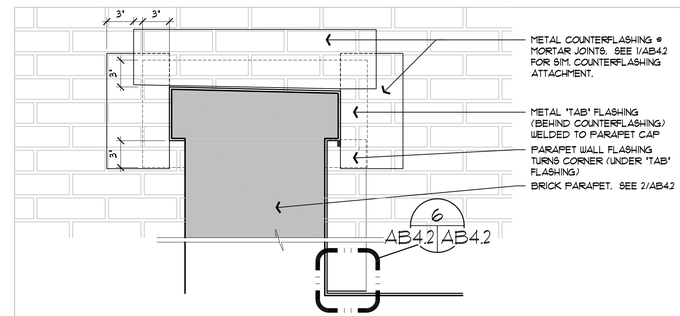

3 PARAPET @ EXIST. WALL
AB4.1 | AB4.2 (@05@5.14b1/8ab42 1/8addl)
SCALE: 1-1/2" = 1'-0"

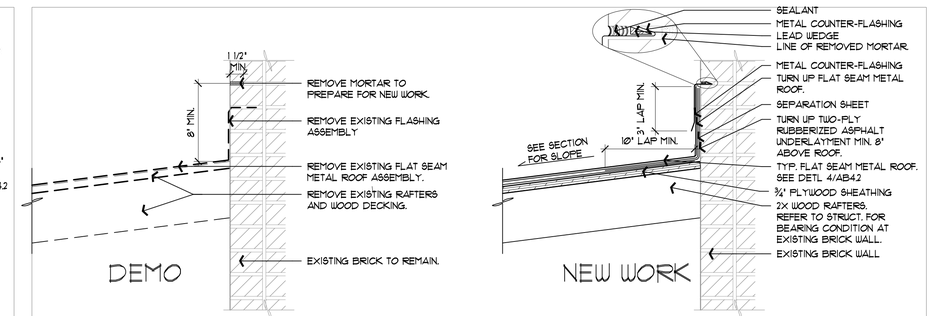

1 FLASHING @ EXIST BRICK WALL
AB4.1 | AB4.2 (@05@5.14b1/8ab42 1/8addl)
SCALE: 1-1/2" = 1'-0"

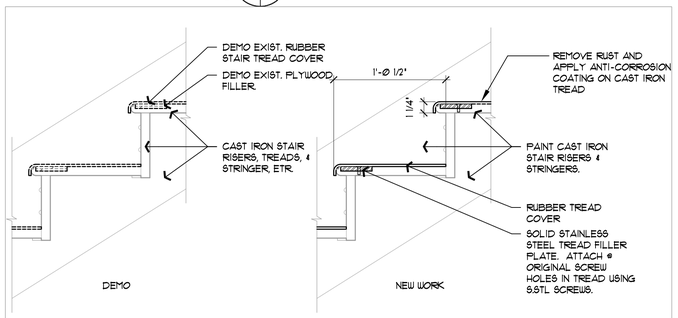

7 TYP. STAIR TREAD REPLACEMENT
AB1.1,1.2,1.3 | AB4.2 (@05@5.14b1/8ab42 1/8addl)
SCALE: 1-1/2" = 1'-0"

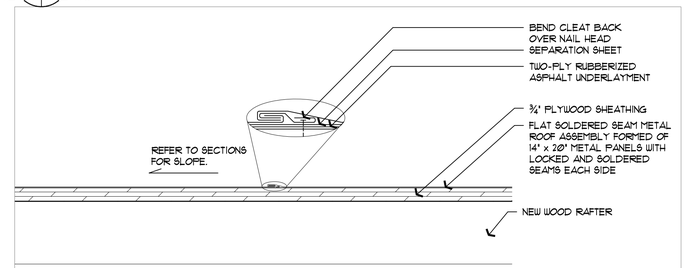

4 TYP. FLAT SOLDERED SEAM METAL ROOF ASSEMBLY
AB4.1 | AB4.2 (@05@5.14b1/8ab42 1/8addl)
SCALE: 3" = 1'-0"

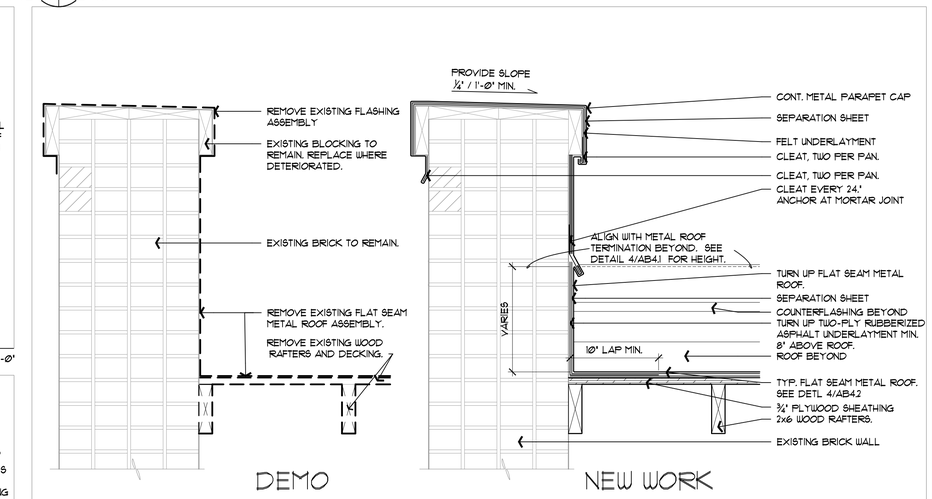

2 CANOPY PARAPET
AB4.1 | AB4.2 (@05@5.14b1/8ab42 1/8addl)
SCALE: 1-1/2" = 1'-0"

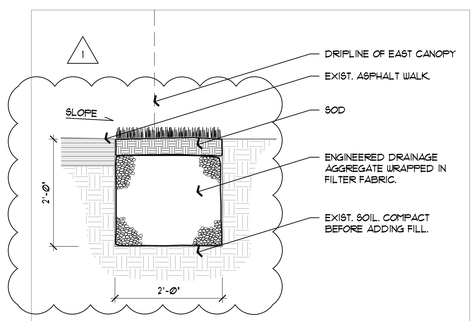

8 DRAINAGE DETAIL
AB1.1 | AB4.2 (@05@5.14b1/8ab42 1/8addl)
SCALE: 3/4" = 1'-0"

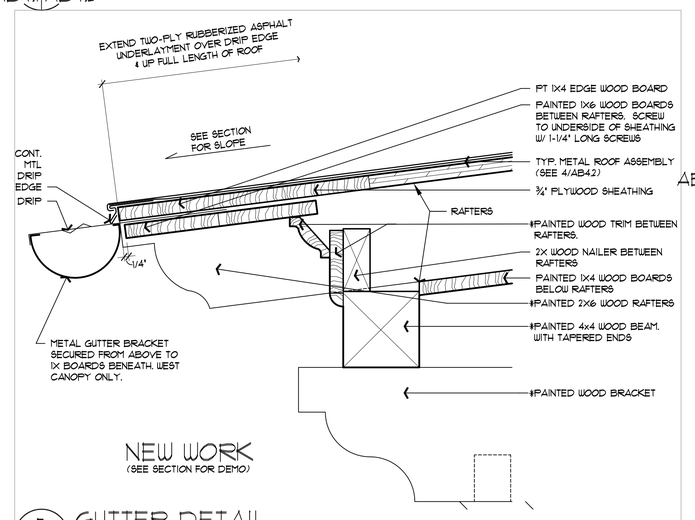

5 GUTTER DETAIL
AB4.1 | AB4.2 (@05@5.14b1/8ab42 1/8addl)
*SEE SECTION 1/AB4.1 FOR INFORMATION ON FABRICATING DECORATIVE ELEMENTS
SCALE: 3" = 1'-0"

FINAL

DESIGNED RS						
DRAWN NP	1	11/15/10	DIMENSION ADD TO DETAIL		BC	RS
CHECKED RW	REVISION	DATE	DESCRIPTION		BY	APP.

CERTIFICATION

DISTRICT OF COLUMBIA — JOHN R. FRANKLIN — No.4616 — REGISTERED ARCHITECT

DETAILS

ARCHITECTURAL

RENOVATION AT TWO SHELTERS
BLAIR SHELTER
635 I STREET, NE

DRAWING NO. AB4.2

CHIEF DESIGN & ENGINEERING DIVISION

DATE __DETAILS____

REGISTRATION NO. 4616
DATE ___OCT 1989___

ARCHITECT
architrave p.c., architects
WASHINGTON, DC 20003

GOVERNMENT OF THE DISRICT OF COLUMBIA
DEPARTMENT OF REAL ESTATE SERVICES

PROJECT NO. PL101C-HS-017
BLDG. NO. 593
DATE: 10/11/2010
SHEET 11 OF 42

1"=10' | 1"=20' | 1"=50' | 1"=100' | 1"=200' | 1"=400' | 3"=1'-0" | 11/2"=1'-0" | 1"=1'-0" | 3/4"=1'-0" | 1/2"=1'-0" | 3/8"=1'-0" | 1/4"=1'-0" | 3/16"=1'-0" | 1/8"=1'-0" | 3/32"=1'-0" | 1/16"=1'-0" | 1/16"=1'-0"

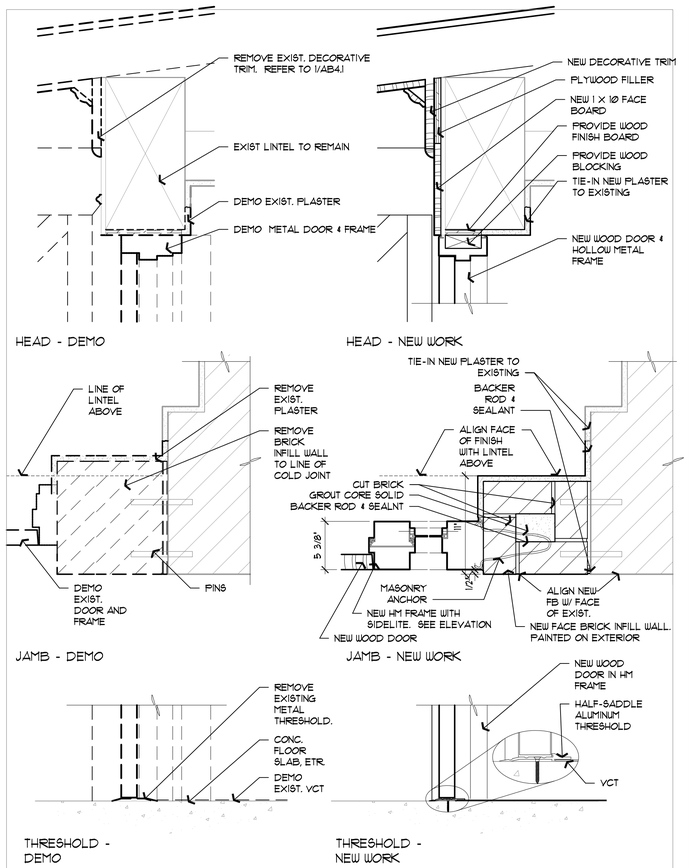

1 DOOR 106A
AB6.2 AB6.2(@505.14b⅛ab6.2⅛addl)
SCALE: 1-1/2" = 1'-0"

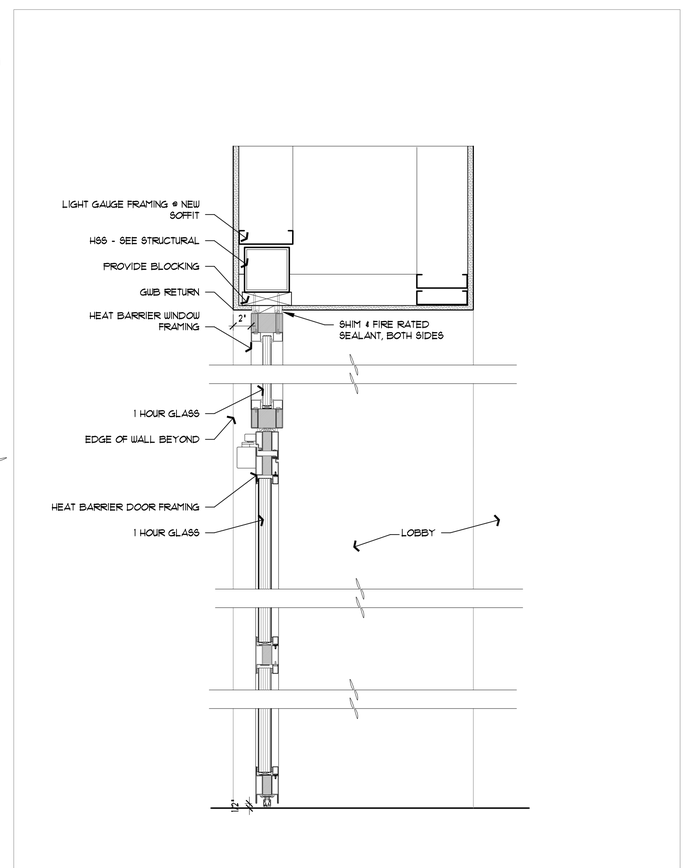

2 DOOR 106
AB6.2 AB6.2(@505.14b⅛ab6.2⅛addl)
SCALE: 1-1/2" = 1'-0"

DOOR SCHEDULE

DOOR NO.	TYPE/MTL.	SIZE (W x H x T)	DOOR FINISH	DOOR ELEV.	DOOR GLASS	DOOR LOUVER	FRAME FINISH	FRAME ELEV.	FRAME TYPE	DETAILS HEAD	DETAILS JAMB	DETAILS SILL	LABEL	HDWR.	REMARKS
003	HM (EXIST)	3' 0" x 7' 0" x 1-3/4"	P	-	-	-	P	-	HM	-	-	-	-	-	10
012	HM (EXIST)	3'-0" x 7'-0" x 1-3/4"	-	-	-	-	-	-	HM	-	-	-	-	-	10
012A	WD (EXIST)	DEMO	-	-	-	-	-	-	DEMO	-	-	-	-	-	1
018A	WD (NEW)	(2) 3'-0"X7'-0" X 1 3/4"	P	D1	OPAQUE & TEMP.	-	P	F2	HM	3/AB6.2	3/AB6.2	3/AB6.2	-	-	1 THRESHOLD 1
101B	HM (EXIST)	3'-0" X 6'-8" X 1 3/4"	P	-	-	-	P	-	HM	-	-	-	-		9
103B	HM (NEW)	3'-0" X 6'-8" X 1 3/4"	P	D3	-	-	P	F3	HM	-	-	-	-		1
103C	HM (NEW)	3'-0" X 6'-8" X 1 3/4"	P	D3	-	-	P	F3	HM	-	-	-	-		1
105A	WD (NEW)	2'-9" X 7'-9" X 1 3/4"	P	D2	-	-	P	-	WD/ETR	-	-	-	-	-	5,8
105B	WD (EXIST)	3'-10" X 7'-0" X 1 3/4"	P	-	-	-	P	-	WD/MTL/ETR	-	-	-	-	-	8
105C	WD (EXIST)	2'-9" X 7'-9" X 1 3/4"	P	-	-	-	P	-	WD/ETR	-	-	-	-	-	8
105D	WD (EXIST)	2'-9" X 7'-0" X 1 3/4"	P	-	-	-	P	-	WD/ETR	-	-	-	-	-	6,8
105E	WD (EXIST)	3'-10" X 7'-0" X 1 3/4"	P	-	-	-	P	-	WD/MTL/ETR	-	-	-	-	-	8
105F	WD (EXIST)	2'-9" X 7'-9" X 1 3/4"	P	-	-	-	P	-	WD/ETR	-	-	-	-	-	8
105G	WD (EXIST)	3'-10" X 7'-0" X 1 3/4"	P	-	-	-	P	-	MTL/ETR	-	-	-	-	-	8
106	STOREFRONT (NEW)	3'-0" X 7'-9" X 1 3/4"	FACTORY	D4	FULL	-	FACTORY	F4	ALUM	-	-	-	1 HR	-	1, 11, THRESHOLD
106A	WD (NEW)	(2) 3'-0" X 7'-0" X 1 3/4"	P	D1	TEMP.	-	P	F1	HM (NEW)	1/AB6.2	1/AB6.2	1/AB6.2	-	-	1, 4 THRESHOLD
107B	HM (EXIST)	3'-3 1/2" X 7'-0" X 1 3/4"	P	-	-	-	P	-	MTL/ETR	-	-	-	-	-	8

REMARKS KEY:
P = PAINT
TRANS. = TRANSPARENT FINISH
1. DEMO EXTG. DOOR & FRAME
2. ADJUST DOOR AND HINGES TO ALLOW FULL CLOSURE.
3. PATCH AND REPAIR DAMAGED FRAME.
4. MAGNETIC LOCK CONTROLLED AT CHECK-IN DESK.
5. DEMO EXISTING HOLLOW WOOD DOOR, FRAME, & TRANSOM TO ORIGINAL WOOD DOOR & FRAME
6. PAINT WOOD INFILL PANEL ABOVE DOOR
7. NOT USED
8. PAINT DECORATIVE DOOR TRIM SURROUNDING DOOR & TRANSOM'S ON FACE TOWARDS LOBBY TO ½ DEPTH OF JAMB.
9. REMOVE AND SALVAGE OPERATING HARDWARE. INSTALL BLANK PLATE TO COVER HOLE IN DOOR. SCREW DOOR IN CLOSED POSITION.
10. NEW HARDWARE ONLY.
11. STEEL-FRAMED FIRE RATED ENTANCE. SEE SPEC SECTION 08.

(T) TAMPERED

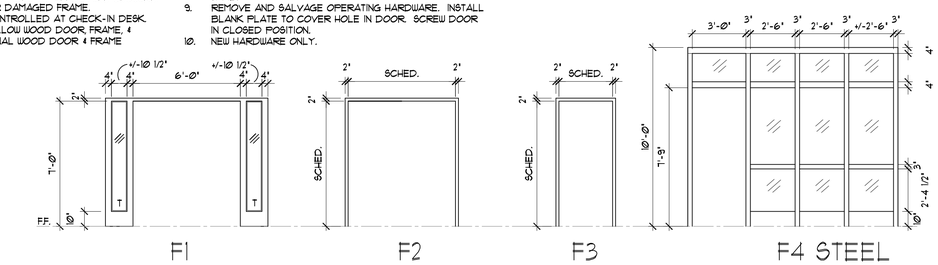

7 FRAME ELEVATIONS
AB6.2 AB6.2(@505.14b⅛ab6.2⅛addl)
SCALE: 1/4" = 1'-0"

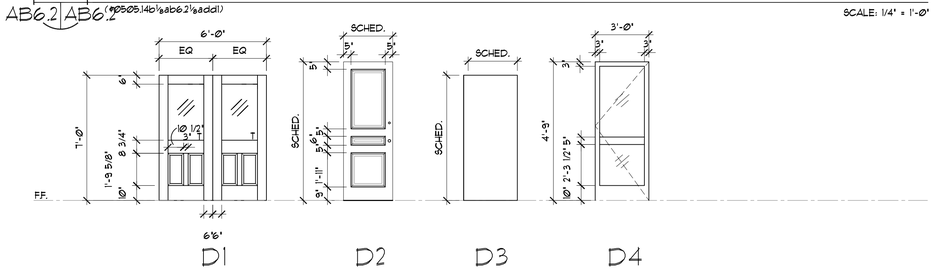

8 DOOR ELEVATIONS
AB6.2 AB6.2(@505.14b⅛ab6.2⅛addl)
SCALE: 1/4" = 1'-0"

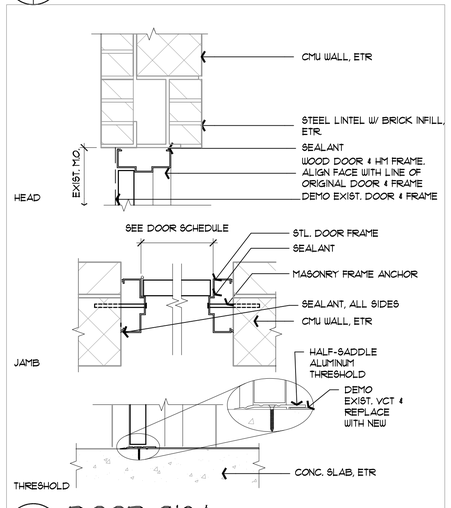

3 DOOR 018A
AB6.2 AB6.2(@505.14b⅛ab6.2⅛addl)
SCALE: 1-1/2" = 1'-0"

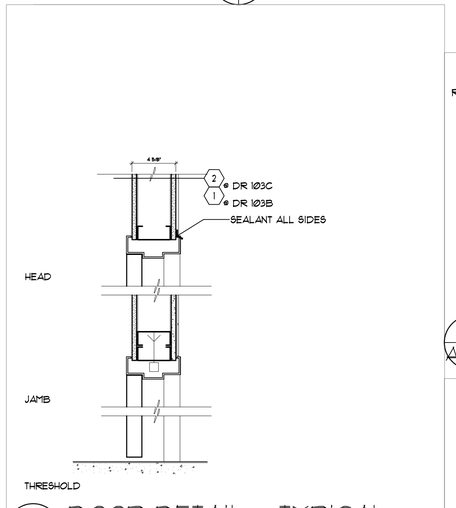

4 DOOR DETAIL - TYPICAL
AB6.2 AB6.2(@505.14b⅛ab6.2⅛addl)
SCALE: 1-1/2" = 1'-0"

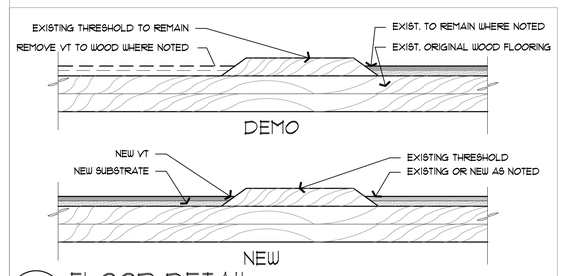

5 FLOOR DETAIL
AM6.2
SCALE: 3" = 1'-0"

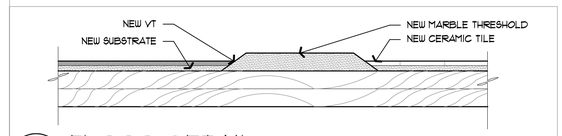

6 FLOOR DETAIL
AM6.2
SCALE: 3" = 1'-0"

FINAL

DESIGNED RS				
DRAWN BC	1	11/15/10	THRESHOLD ADDED TO DOOR	BC	RS
CHECKED RW	REVISION	DATE	DESCRIPTION	BY	APP.

CERTIFICATION

DISTRICT OF COLUMBIA — JOHN R. FRANKLIN — No.4616 — REGISTERED ARCHITECT

DOOR SCHEDULE, ELEVATIONS, & DETAILS

ARCHITECTURAL

RENOVATION AT TWO SHELTERS
BLAIR SHELTER
635 I STREET, NE

DRAWING NO. AB6.2

CHIEF DESIGN & ENGINEERING DIVISION

DATE _____

REGISTRATION NO. 4616
DATE __ OCT. 1989 __

ARCHITECT
architrave p.c., architects
WASHINGTON, DC 20003

GOVERNMENT OF THE DISRICT OF COLUMBIA
DEPARTMENT OF REAL ESTATE SERVICES

PROJECT NO. PL101C-HS-017
BLDG. NO. 593
DATE: 10/11/2010
SHEET 16 OF 42

1"=10' | 1"=20' | 1"=50' | 1'=100' | 1"=200' | 1"=400' | 3"=1'-0" | 11/2"=1'-0" | 1"=1'-0" | 3/4"=1'-0" | 1/2"=1'-0" | 3/8"=1'-0" | 1/4"=1'-0" | 3/16"=1'-0" | 1/8"=1'-0" | 3/32"=1'-0" | 1/16"=1'-0" | 1/16"=1'-0"

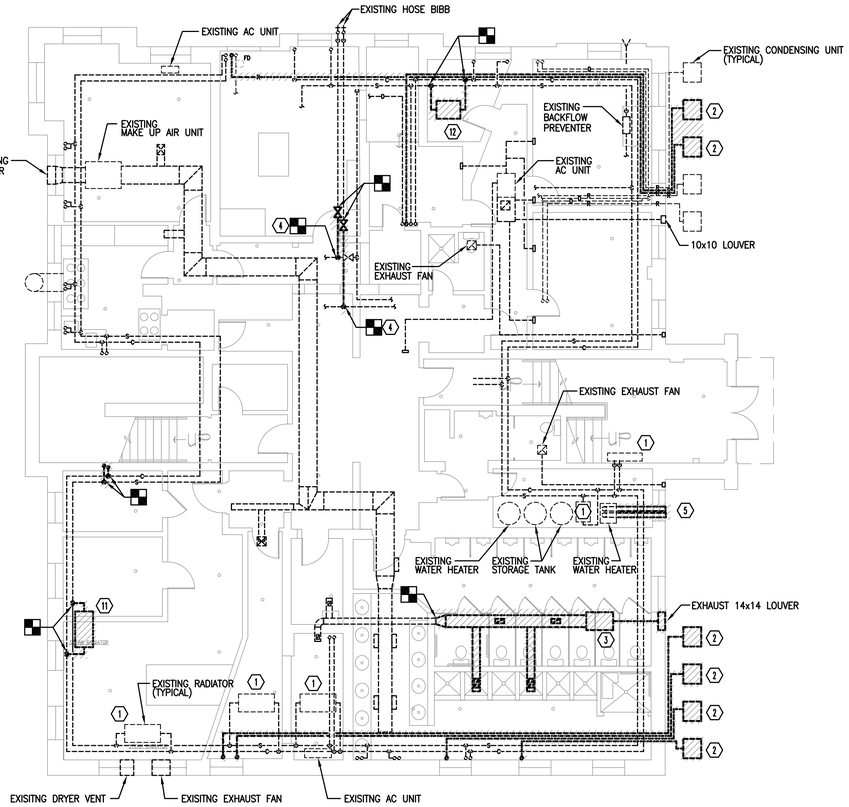

1 / MB-2

BASEMENT MECHANICAL PLAN - DEMOLITION

SCALE: 1/8" = 1'-0"

NORTH

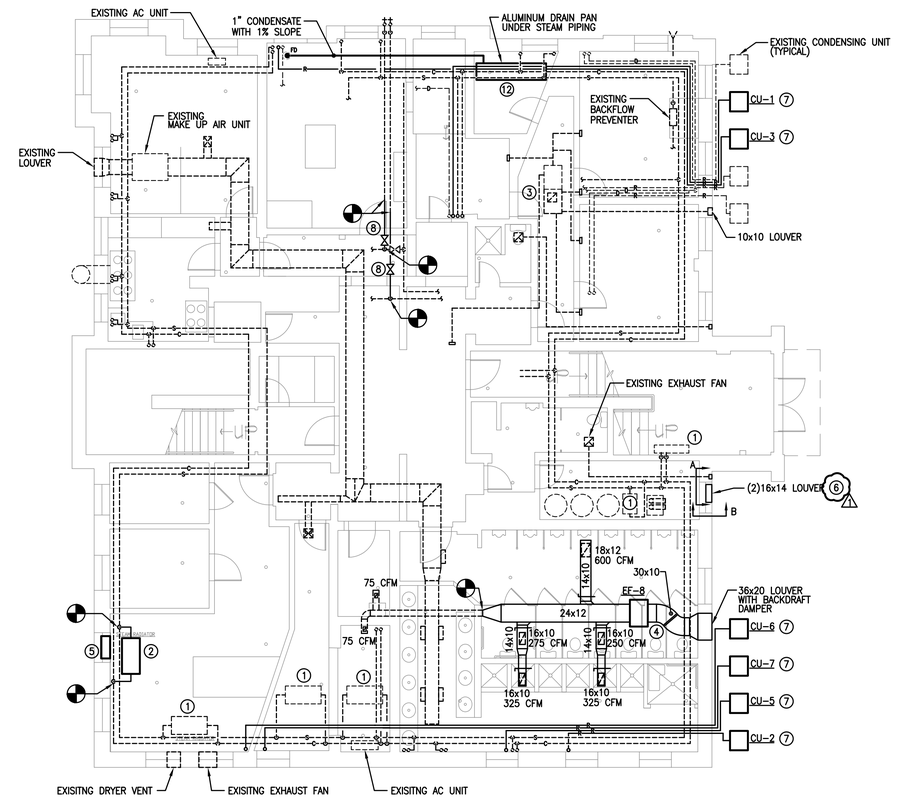

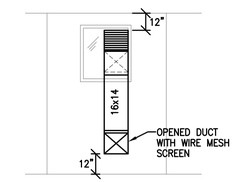

SECTION A–A

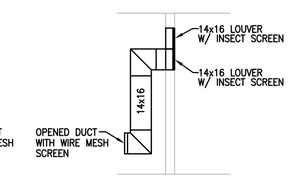

SECTION B–B

2 / MB-2

BASEMENT MECHANICAL PLAN - NEW WORK

SCALE: 1/8" = 1'-0"

NORTH

DEMOLITION NOTES:

1. DISCONNECT AND REMOVE EXISTING RADIATOR TO BE REINSTALL. REMOVE PIPING AND SUPPORTS. REMOVE PAINT FROM RADIATOR. EXISTING THERMOSTATIC VALVE TO BE REUSED.
2. DEMOLISH EXISTING CONDENSING UNIT AND ASSOCIATE PIPING, WIRING AND SUPPORT.
3. DEMOLISH EXISTING EXHAUST FAN, ASSOCIATED DUCT WORK SUPPORT AND CONTROLS.
4. DEMOLISH EXISTING ISOLATION VALVE AND PIPING TO POINT OF DISCONNECTION.
5. DEMOLISH EXISTING INTAKE AND VENT DUCT TO ABANDONED WATER HEATER.
6. DEMOLISH EXISTING STEAM HEATER AND ASSOCIATED PIPING.
7. DEMOLISH EXISTING EXHAUST FAN, CONTROLS AND SUPPORT. EXHAUST DUCT TO BE RECONNECTED.
8. DEMOLISH EXISTING UNIT VENTILATOR AND ASSOCIATED CONTROLS AND SUPPORTS. CAP ALL PIPES. CONDENSATE DRAIN TO BE REUSED.
9. DEMOLISH EXISTING AC UNIT AND ASSOCIATED CONTROLS AND SUPPORTS. DEMOLISH REFRIGERANT PIPES BACK TO CONDENSING UNIT.
10. DEMOLISH EXISITNG TOILET AND LAVATORY.
11. DISCONNECT AND REMOVE EXISTING RADIATOR TO BE RE–LOCATED. REMOVE PIPING AND SUPPORTS. REMOVE PAINT FROM RADIATOR. EXISTING THERMOSTATIC VALVE TO BE REUSED.
12. DEMOLISH EXISTING STEAM RADIATOR AND ASSOCIATED PIPING.

GENERAL NOTES:

REMOVE AND INSTALL NEW INSULATION FOR PIPIING WHICH WAS STRIPPED OF ASBESTOS INSULATION.

NEW WORK NOTES:

1. PAINT RADIATOR WITH HIGH TEMPERATURE PAINT AND REINSTALL RADIATOR WITH THERMOSTATIC VALVE. COORDINATE WITH COTR FOR PAINT COLOR AND SPECIFICATION.
2. PAINT RE–LOCATED RADIATOR WITH HIGH TEMPERATURE PAINT AND REINSTALL RADIATOR WITH THERMOSTATIC VALVE. COORDINATE WITH COTR FOR PAINT COLOR AND SPECIFICATION.
3. REPAIR CONDENSATE PAN AND INSULATE PIPING.
4. NEW EXHAUST FAN , DUCTWORK , AIR DEVICES, AND SUPPORTS. PROVIDE FLEXIBLE CONNECTION BETWEEN FAN AND DUCTWORK.
5. NEW 36x36 OUTDOOR AIR LOUVER.
6. NEW (2) 16x14 LOUVERS AND DUCTWORK, SEE ELEVATION PLAN DRAWING MB–2.
7. NEW CONDENSING UNIT AND ASSOCIATED PIPING, SUPPORTS AND INSULATION. COORDINATE PIPING AND CONNECTION TO UV UNIT PER MECHANICAL SCHEDULES.
8. NEW ISOLATION VALVES AND PIPING. LOCATE VALVES OUTSIDE BOILER ROOM.
9. NEW ELECTRIC HEATER.
10. UNIT VENTILATOR UNIT AND ASSOCIATED PIPING, CONTROLS AND SUPPORTS. CONNECT CONDENSATE DRAIN TO EXISTING DRAIN PIPE. INSTALL NEW CONDENSING UNIT. SIZE THE REFRIGERANT PIPES PER MANUFACTURER'S RECOMMENDATION.
11. EXHAUST FAN AND ASSOCIATED CONTROLS AND SUPPORTS. RECONNECT TO EXISTING DUCTWORK. PROVIDE FLEXIBLE CONNECTION BETWEEN FAN AND DUCTWORK. PROVIDE INSECT SCREEN AT THE LOUVER.
12. PROVIDE DRAIN PAN UNDER EXISTING STEAM PIPING. DISCHARGE DRAIN TO FLOOR DRAIN LOCATED IN BOILER ROOM.

FINAL

DESIGNED W					
DRAWN W	1	11/15/10	REFERENCED NEW NOTE #6	MB	MB
CHECKED MB	REVISION	DATE	DESCRIPTION	BY	APP.

CERTIFICATION

BASEMENT MECHANICAL PLANS – DEMOLITION AND NEW WORK

MECHANICAL

RENOVATION AT TWO SHELTERS
BLAIR SHELTER
635 I STREET, NE

DRAWING NO. MB–2

CHIEF DESIGN & ENGINEERING DIVISION

DATE _____

REGISTRATION NO.
DATE _____

ARCHITECT
architrave p.c., architects
WASHINGTON, DC 20003

GOVERNMENT OF THE DISTRICT OF COLUMBIA
DEPARTMENT OF REAL ESTATE SERVICES

PROJECT NO. PL101C–HS–017
BLDG. NO. 593
DATE: 10/11/2010
SHEET 23 OF 42

1"=10' | 1"=20' | 1"=50' | 1'=100' | 1"=200' | 1"=400' | 3"=1'-0" | 11/2"=1'-0" | 1"=1'-0" | 3/4"=1'-0" | 1/2"=1'-0" | 3/8"=1'-0" | 1/4"=1'-0" | 3/16"=1'-0" | 1/8"=1'-0" | 3/32"=1'-0" | 1/16"=1'-0" | 1/16"=1'-0"

UNIT VENTILATOR SCHEDULES																					
UNIT NO.	AREA SERVED	LOCATION	SUPPLY FAN			COOLING CAPACITY							STEAM HEATING				ELECTRICAL			BASIS OF DESIGN	NOTES
			CFM	MIN. O.A. (CFM)	HP	EAT (F)		LAT (F)		TOTAL MBH	SENS MBH	REFRIGERANT	EAT (F)	LAT (F)	MBH	PSIG	VOLT	PH	HZ		
						DB	WB	DB	WB												
UV–1	DORM.	2ND FL.	975	300	1/4	80	67	57.7	55.6	36.7	24.6	R410	50	120	70	5	208	1	60	TRANE VUV	1,2
UV–2	DORM.	2ND FL.	975	300	1/4	80	67	57.7	55.6	36.7	24.6	R410	50	120	70	5	208	1	60	TRANE VUV	1,2
UV–3	DORM.	3RD FL.	975	300	1/4	80	67	57.7	55.6	36.7	24.6	R410	50	120	70	5	208	1	60	TRANE VUV	1,2
UV–4	DORM.	3RD FL.	–	–	–	–	–	–	–	–	–	–	–	–	–	–	–	–	–	–	EXISTING
UV–5	DORM.	3RD FL.	975	300	1/4	80	67	57.7	55.6	36.7	24.6	R410	50	120	70	5	208	1	60	TRANE VUV	1,2
UV–6	DORM.	3RD FL.	975	300	1/4	80	67	57.7	55.6	36.7	24.6	R410	50	120	70	5	208	1	60	TRANE VUV	1,2
UV–7	DORM.	2ND FL.	975	300	1/4	80	67	57.7	55.6	36.7	24.6	R410	50	120	70	5	208	1	60	TRANE VUV	1,2

NOTES:

COORDINATE COMBINATION MOTOR STARTER AND FUSIBLE DISC'

2. MODULATING STEAM VALVE.

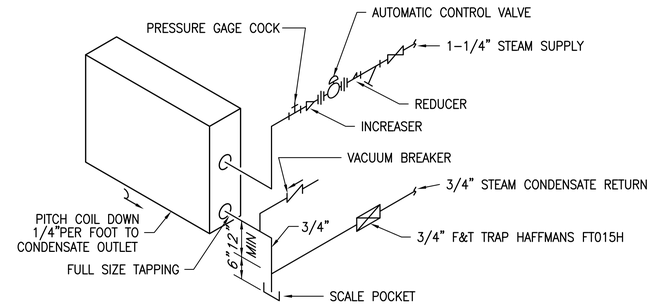

1 MB-5 MB-5 UNIT VENTILATOR STEAM PIPING CONNECTION
NOT TO SCALE

AIR COOLED CONDENSING UNIT SCHEDULES												
UNIT NO.	LOCATION	SERVING	REFRIGERANT	CAPACITY MBH	AMBIENT AIR TEMP	COMPRESSOR		ELECTRICAL DATA			BASIS OF DESIGN	NOTES
						CIRCUIT	HP	VOLT	PH	HZ		
CU–1	GROUND	UV–1	R410	42	95°F	1	1/6	208	1	60	TRANE XB	1
CU–2	GROUND	UV–2	R410	42	95°F	1	1/6	25 208	1	60	TRANE XB	1
CU–3	GROUND	UV–3	R410	42	95°F	1	1/6	25 208	1	60	TRANE XB	1
CU–4	GROUND	UV–4	–	–	–	–	–	– –	–	–	–	EXISTING
CU–5	GROUND	UV–5	R410	42	95°F	1	1/6	25 208	1	60	TRANE XB	1
CU–6	GROUND	UV–6	R410	42	95°F	1	1/6	25 208	1	60	TRANE XB	1
CU–7	GROUND	UV–7	R410	42	95°F	1	1/6	25 208	1	60	TRANE XB	1

NOTES:

1. COORDINATE COMBINATION MOTOR STARTER AND FUSIBLE DISCONNECT SWITCH WITH ELECTRICAL DRAWING.

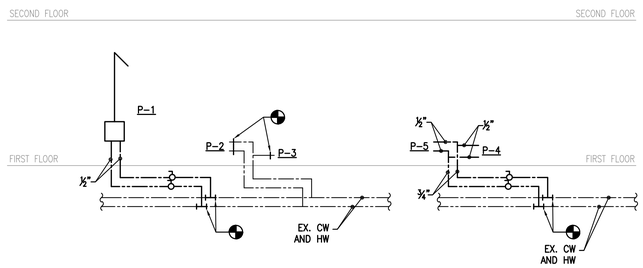

2 MB-5 MB-5 DOMESTIC WATER RISER DIAGRAM
NOT TO SCALE

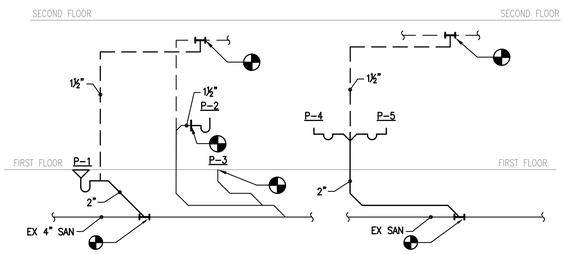

3 MB-5 MB-5 SANITARY RISER DIAGRAM
NOT TO SCALE

EF–2	CELING	TOILET	100	0.2	53	DIRECT	120	1	60	GREENHECK SP	1, 2
EF–3	CELING	TOILET	100	0.2	53	DIRECT	120	1	60	GREENHECK SP	1, 2
EF–4	CELING	TOILET	100	0.2	53	DIRECT	120	1	60	GREENHECK SP	1, 2
EF–5	CELING	TOILET	100	0.2	53	DIRECT	120	1	60	GREENHECK SP	1, 2
EF–6	CELING	TOILET	100	0.2	53	DIRECT	120	1	60	GREENHECK SP	1, 2
EF–7	CELING	TOILET	100	0.2	53	DIRECT	120	1	60	GREENHECK SP	1, 2
EF–8	INLINE	TOILET	1925	0.2	3/4 HP	BELT	208	1	60	GREENHECK BCF	1, 2

USIBLE DISCONNECT SWITCH WITH ELECTRICAL DRAWING.

2. INTERLOCK WITH LIGHT SWITCH

UNIT HEATER SCHEDULE						
UNIT NO.	LOCATION	CAPACITY (KW)	ELECTRICAL			BASIS OF DESIGN
			VOLT	PHASE	HZ	
UH–1	ENTRANCE	5	208	3	60	TRANE QMARK

NOTES:

1. COORDINATE COMBINATION MOTOR STARTER AND FUSIBLE DISCONNECT SWITCH WITH ELECTRICAL DRAWING.
2. REMOTE THERMOSTAT

PLUMBING FIXTURE SCHEDULE				
MARK	FIXTURE	BASIS OF DESIGN	MODEL NO.	REMARKS
P–1	SHOWER	BRADLEY	HN300–TMV–VL/VR–ES–G	
P–2	LAVATORY	AMERICAN STANDARD	LUCERNE 0356.015	FAUCET: AMERICAN STANDARD MONTERREY 6530.170 WITH AERATOR V05 (0.5 GPM)
P–3	WATER CLOSET	AMERICAN STANDARD	MADERA 3461.160	FLUSH VALVE: SLOAN ROYAL MODEL #111–1.6
P–4	SINK	ELKAY	LUSTERTONE LRAD1316	FAUCET: CHICAGO FAUCET #895–317FC
P–5	SERVICE SINK	AMERICAN STANDARD	AKRON SERVICE SINK MODEL # 7695.008	FAUCET: MODEL #8340.243 TRAP: MODEL #7798.030

FINAL

	DESIGNED				
	DRAWN	1	11/15/10	REVISED CU LOCATION	MB MB
	CHECKED	REVISION	DATE	DESCRIPTION	BY APP.
	CERTIFICATION	SCHEDULES AND DETAILS			MECHANICAL
		RENOVATION AT TWO SHELTERS BLAIR SHELTER 635 I STREET, NE			DRAWING NO. MB–5
CHIEF DESIGN & ENGINEERING DIVISION DATE _____	REGISTRATION NO. DATE _____ ARCHITECT architrove p.c., architects WASHINGTON, DC 20003	GOVERNMENT OF THE DISTRICT OF COLUMBIA DEPARTMENT OF REAL ESTATE SERVICES			PROJECT NO. PL101C–HS–017 BLDG. NO. 593 DATE: 10/11/2010 SHEET 26 OF 42

1"=10' 1"=20' 1"=50' 1'=100' 1"=200' 1"=400' 3"=1'–0" 11/2"=1'–0" 1"=1'–0" 3/4"=1'–0" 1/2"=1'–0" 3/8"=1'–0" 1/4"=1'–0" 3/16"=1'–0" 1/8"=1'–0" 3/32"=1'–0" 1/16"=1'–0" 1/16"=1'–0"

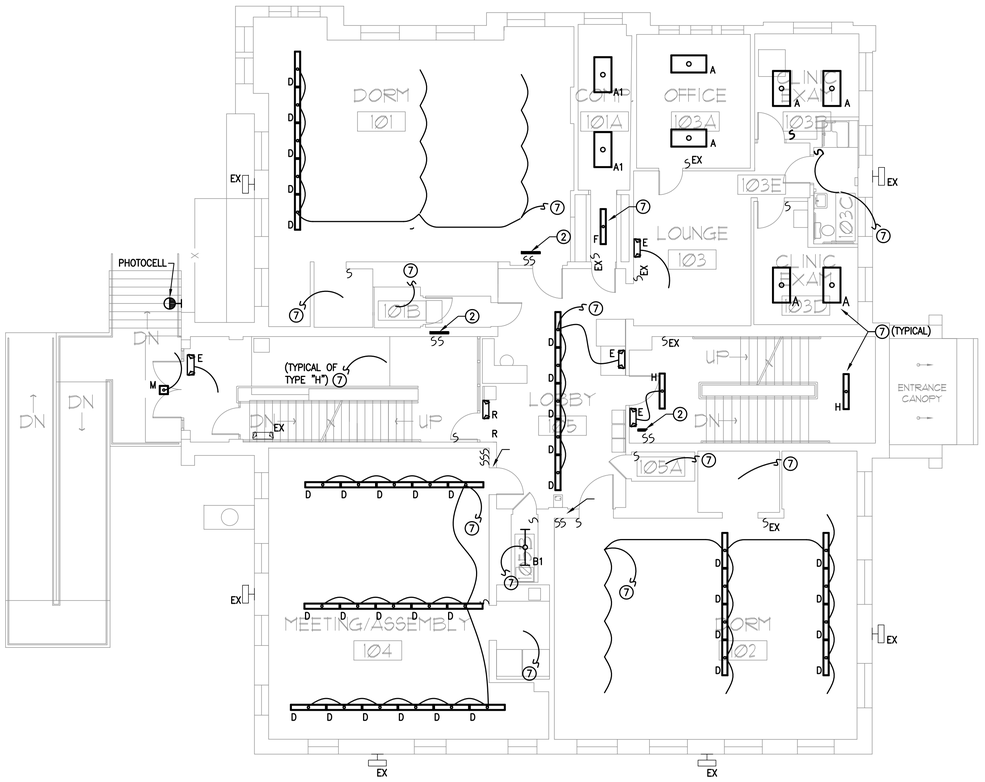

1 EB-5

FIRST FLOOR LIGHTING PLAN - NEW WORK

SCALE: 1/8" = 1'-0"

NORTH

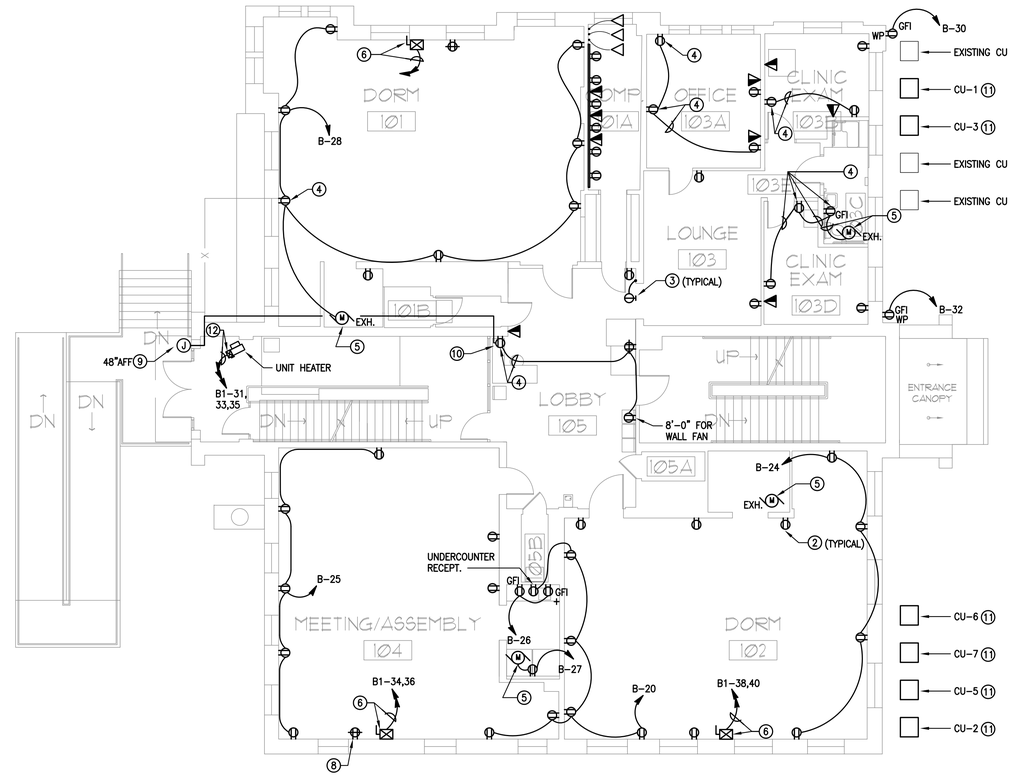

2 EB-5

FIRST FLOOR POWER PLAN - NEW WORK

SCALE: 1/8" = 1'-0"

NORTH

GENERAL NOTES:

1. ALL CONDUITS SHALL BE RUN IN CONCEALED WALL AND CEILING AS MUCH AS POSSIBLE. ALL EXPOSED CONDUITS SHALL BE PAINT TO MATCH ADJACENT WALL FINISHING.
2. REPLACE LAMPS IN FLUORESCENT LIGHTING FIXTURES WITH NEW ENERGY SAVING LAMPS. REPLACE T12 34W LAMPS WITH T8 32W WHERE APPLICABLE.

NOTES:

1. EXISTING LIGHT SWITCHES.
2. PROVIDE IVORY DUPLEX RECEPTACLE OUTLET AND COVER PLATE WITH NEMA 5-20R, 2P, 3W, 20A, 125V AND RE-CONNECT TO EXISTING BRANCH CIRCUIT.
3. PROVIDE IVORY SINGLE RECEPTACLE OUTLET AND COVER PLATE WITH NEMA 5-20R, 2P, 3W, 20A, 125V AND RE-CONNECT TO EXISTING BRANCH CIRCUIT.
4. PROVIDE DUPLEX RECEPTACLE OUTLET AND COVER PLATE WITH NEMA 5-20R, 2P, 3W, 20A, 125V AND CONNECT TO ADJACENT RECEPTACLE OUTLET. 2#12AWG+1#12GND IN ¾"C.
5. PROVIDE POWER CONNECTION TO CEILING MOUNTED EXHAUST FAN. ALSO, WALL MOUNTED SWITCH FOR CONTROLING ON/OFF. 2#12AWG+1#12GND IN ¾"C.
6. PROVIDE POWER CONNECTION TO UNIT VENTILATOR. COMBINATION OF MOTOR STARTER AND FUSIBLE DISCONNECT SWITCH 30A, 240V, 2P FUSED AT 20A IN NEMA 1 ENCLOSURE. 2#12AWG+1#12GND IN ¾"C.
7. CONNECT FLUORESCENT LIGHTING FIXTURE TO EXISTING BRANCH CIRCUIT WHERE FIXTURES HAVE BEEN REMOVED. EXTEND WIRING AND CONDUIT IF REQUIRED. 2#12AWG+1#12GND IN ¾"C. (1)
8. PROVIDE IVORY QUAD RECEPTACLE OUTLET AND COVER PLATE WITH NEMA 5-20R, 2P, 3W, 20A, 125V AND RE-CONNECT TO EXISTING BRANCH CIRCUIT.
9. PROVIDE JUNCTION BOX WITH 1" CONDUIT AND PULL STRING AND TERMINATE IN TO FRONT DESK FOR SECURITY DOOR.
10. 18"AFF CONDUIT FOR SECURITY DOOR.
11. PROVIDE POWER SERVICE CONNECTION TO OUTDOOR CONDENSING UNIT. CONNECT TO EXISTING BRANCH CIRCUIT. RE-SIZE FUSES PER MECHANICAL EQUIPMENT.
12. PROVIDE POWER CONNECTION TO UNIT HEATER. COMBINATION OF MOTOR STARTER AND FUSIBLE DISCONNECT SWITCH 30A, 240V, 3P FUSED AT 20A IN NEMA 1 ENCLOSURE. 3#12AWG+1#12GND IN ¾"C.

FINAL

	DESIGNED SNT					
	DRAWN BES	1	11/15/10	REVISED NOTE 7.	MPK	MPK
	CHECKED MPK	REVISION	DATE	DESCRIPTION	BY	APP.
	CERTIFICATION	FIRST FLOOR LIGHTING AND POWER PLANS – NEW WORK			ELECTRICAL	
		RENOVATION AT TWO SHELTERS BLAIR SHELTER 635 I STREET, NE			DRAWING NO. EB-5	
CHIEF DESIGN & ENGINEERING DIVISION DATE	REGISTRATION NO. 10904 DATE 30 AUGUST 2010 ARCHITECT architrave p.c., architects WASHINGTON, DC 20003	GOVERNMENT OF THE DISTRICT OF COLUMBIA DEPARTMENT OF REAL ESTATE SERVICES			PROJECT NO. PL101C-HS-017 BLDG. NO. 593 DATE: 10/11/2010 SHEET 37 OF 42	

1"=10' | 1"=20' | 1"=50' | 1'=100' | 1"=200' | 1"=400' | 3"=1'-0" | 11/2"=1'-0" | 1"=1'-0" | 3/4"=1'-0" | 1/2"=1'-0" | 3/8"=1'-0" | 1/4"=1'-0" | 3/16"=1'-0" | 1/8"=1'-0" | 3/32"=1'-0" | 1/16"=1'-0" | 1/16"=1'-0"

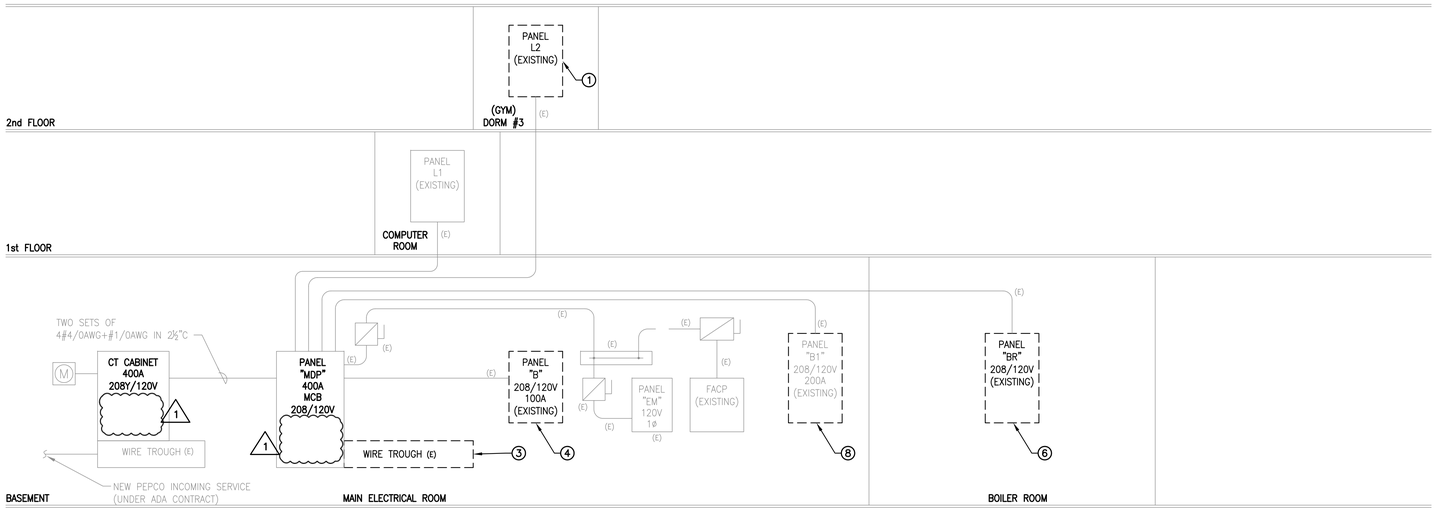

1 / EB-8 POWER RISER DIAGRAM - DEMOLITION

SCALE: NONE

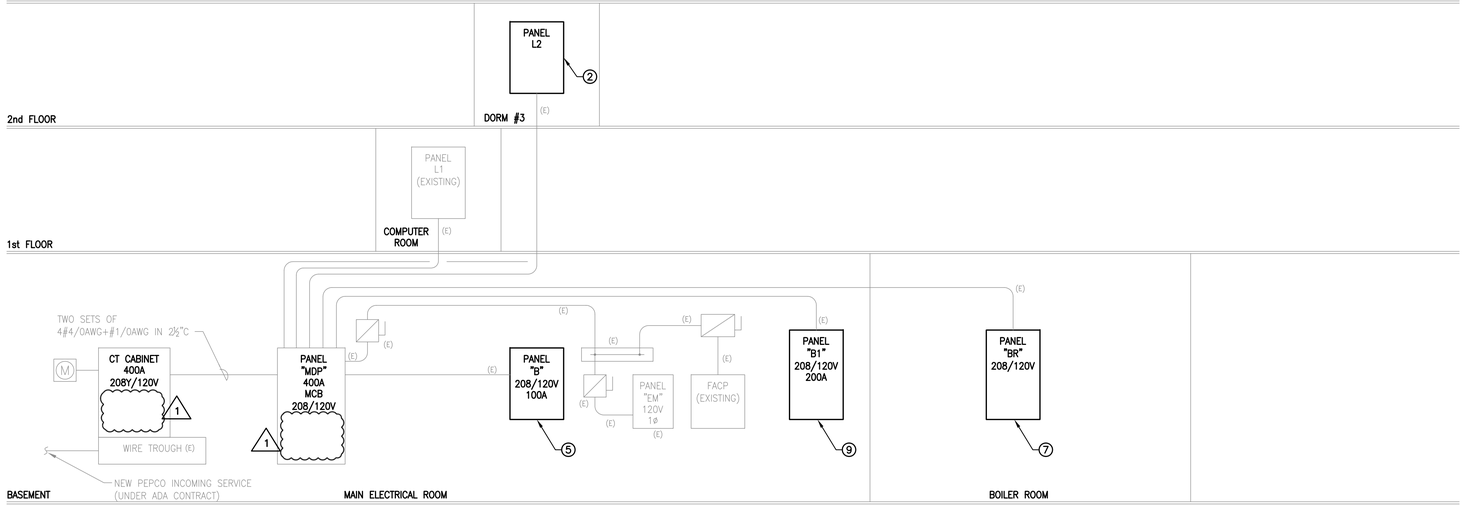

2 / EB-8 POWER RISER DIAGRAM - NEW WORK

SCALE: NONE

NOTES:

1. DEMOLISH EXISTING PANEL "L2", ASSOCIATED FEEDER TO REMAIN.
2. PROVIDE PANEL "L2", SEE SCHEDULE ON DRAWING EB-10. INSTALL PANEL AT THE SAME LOCATION AND RE-CONNECT TO EXISTING FEEDER.
3. DEMOLISH EXISTING WIRE TROUGH.
4. DEMOLISH EXISTING PANEL "B", ASSOCIATED FEEDER TO REMAIN.
5. PROVIDE REPLACEMENT OF PANEL "B", SEE SCHEDULE ON DRAWING EB-10. INSTALL PANEL AT THE SAME LOCATION AS REMOVED OLD PANEL "B" AND RE-CONNECT TO EXISTING FEEDER.
6. DEMOLISH EXISTING PANEL "BR", ASSOCIATED FEEDER TO REMAIN.
7. PROVIDE PANEL "BR", SEE SCHEDULE ON DRAWING EB-10. INSTALL PANEL AT THE SAME LOCATION AND RE-CONNECT TO EXISTING FEEDER.
8. DEMOLISH EXISTING PANEL "B1" AND THE ASSOCIATED FEEDER TO REMAIN.
9. PROVIDE PANEL "B1", SEE SCHEDULE ON DRAWING EB-10. INSTALL PANEL AT THE SAME LOCATION AND RE-CONNECT TO EXISTING FEEDER.

FINAL

DESIGNED	SNT				
DRAWN	BES	1	11/15/10	DELETED ADA NOTE	
CHECKED	MPK	REVISION	DATE	DESCRIPTION	BY / APP.

CERTIFICATION

POWER RISER DIAGRAMS

ELECTRICAL

RENOVATION AT TWO SHELTERS
BLAIR SHELTER
635 I STREET, NE

DRAWING NO. EB-8

CHIEF DESIGN & ENGINEERING DIVISION

DATE

REGISTRATION NO. 10904
DATE 30 AUGUST 2010

ARCHITECT
architrave p.c., architects
WASHINGTON, DC 20003

GOVERNMENT OF THE DISTRICT OF COLUMBIA
DEPARTMENT OF REAL ESTATE SERVICES

PROJECT NO. PL101C-HS-017
BLDG. NO. 593
DATE: 10/11/2010
SHEET 40 OF 42

1"=10' | 1"=20' | 1"=50' | 1'=100' | 1"=200' | 1"=400' | 3"=1'-0" | 11/2"=1'-0" | 1"=1'-0" | 3/4"=1'-0" | 1/2"=1'-0" | 3/8"=1'-0" | 1/4"=1'-0" | 3/16"=1'-0" | 1/8"=1'-0" | 3/32"=1'-0" | 1/16"=1'-0" | 1/16"=1'-0"

ARCHITECTURAL ABBREVIATIONS

@	AT
ABV.	ABOVE
AC.	ACOUSTIC(AL)
A/C	AIR CONDITIONING
ACC.	ACCESS
ACM	ASBESTOS CONTAINING MATERIAL
ACT	ACOUSTICAL TILE
AD	AREA DRAIN
ADA	AMERICANS WITH DISABILITIES
ADD.	ADDENDUM
ADH.	ADHESIVE
ADJ.	ADJACENT, ADJUSTABLE
AFF	ABOVE FINISHED FLOOR
AGG.	AGGREGATE
ALT.	ALTERNATE
ALUM.	ALUMINUM
ANOD.	ANODIZED
APPROX.	APPROXIMATE
ARCH.	ARCHITECT, ARCHITECTURAL
ASSBLY.	ASSEMBLY
ATTEN.	ATTENUATION
AUTO.	AUTOMATIC
BARR.	BARRIER
BC	BRICK COURSE
BD.	BOARD
BEL.	BELOW
BETW.	BETWEEN
BITUM.	BITUMINOUS
BLDG.	BUILDING
BLK.	BLOCK
BLKG.	BLOCKING
BLKHD.	BULKHEAD
BM.	BEAM
BOT.	BOTTOM
BRG.	BEARING
BRG.PL.	BEARING PLATE
BRK	BRICK
BRZ.	BRONZE
BSMT.	BASEMENT
BTU	BRITISH THERMAL UNIT
BTW.	BETWEEN
C/AT	CONCEALED SPLINE, ACOUSTIC TILE
CAB.	CABINET
CEM.	CEMENT
CER	CERAMIC
CF	CUBIC FOOT
CLG.	CEILING
C & G	CURB AND GUTTER
CH	CEILING HEIGHT
CHBD.	CHALKBOARD
CIR	CIRCLE
CIRC.	CIRCUMFERENCE
CJ	CONTROL JOINT
CL.	CLOSET/CENTER LINE
CLK. CLKG.	CAULK, CAULKING
CLR	CLEAR, CLEARANCE
CMU	CONCRETE MASONRY UNIT
CNTR.	COUNTER
CO	CLEAN OUT
COL	COLUMN
COMB.	COMBINATION
CONC.	CONCRETE
COMM.	COMMUNICATIONS
COMP.	COMPRESSIBLE, (ED), (ION), (IBLE), COMPOSITION
CMPSN.	COMPOSITION (COMPOSITE)
COMPT.	COMPARTMENT
CONC.	CONCRETE
CND.	CONDUIT
CONN.	CONNECTION
CONST.	CONSTRUCTION
CONT.	CONTINUOUS OR CONTINUE
CONTR.	CONTRACT, CONTRACTOR
COR	CONTRACTING OFFICER'S REPRSENTATIVE
CORR.	CORRIDOR, CORRUGATED
CRS.	COURSE(S)
CT	CERAMIC TILE
CTR.	CENTER, COUNTER
CU	COPPER
CURT.W.	CURTAIN WALL
CY	CUBIC YARD
CYL.	CYLINDER
D	DEPTH, DRAIN
DB.	DECIBEL
DEMO	DEMOLISH, DEMOLITION
DEPT.	DEPARTMENT
DET.	DETAIL
DF	DRINKING FOUNTAIN
DH	DOUBLE HUNG
DIA.	DIAMETER
DIAG.	DIAGONAL
DIM.	DIMENSION
DISP.	DISPOSAL
DIV.	DIVISION
DL	DEAD LOAD
DN.	DOWN
DP.	DAMPPROOFING
DPR.	DAMPER
DR.	DOOR
DS	DOWNSPOUT
DT	DRAIN TILE
DWG.	DRAWING
DWR.	DRAWER
E	EAST
EA.	EACH
EF	EXHAUST FAN
EJ	EXPANSION JOINT
EL.	ELEVATION
ELEC.	ELECTRIC(AL)
ELEV.	ELEVATOR
EMERG.	EMERGENCY
ENCL.	ENCLOSE(URE)
EPB	ELECTRIC PANELBOARD
EP	ELECTRIC PANEL
EQ.	EQUAL
EQUIP.	EQUIPMENT
EPS	EXPANDED POLYSTYRENE
ESMT.	EASEMENT
EST.	ESTIMATE
ETR	EXISTING TO REMAIN
EWC	ELECTRIC WATER COOLER
EXH.	EXHAUST
EXP.	EXPANSION, EXPOSED
EXPJT	EXPANSION JOINT
EXT.	EXTERIOR
EXTG.	EXISTING
(E)	EXISTING
EX	EXISTING
EXIST	EXISTING
FA	FIRE ALARM
FB	FACE BRICK
FBD.	FIBERBOARD
FBO	FURNISHED BY OTHERS
FD	FLOOR DRAIN, FIRE DAMPER
FDN.	FOUNDATION
FE	FIRE EXTINGUISHER
FEC	FIRE EXTINGUISHER CABINET
FFE	FINISHED FLOOR ELEVATION
FF	FINISH FLOOR
FF EL	FINISH FLOOR ELEVATION
FFL	FINISHED FLOOR LINE
FGL.	FIBERGLASS
FIN.	FINISH, FINISHED
FIXT.	FIXTURE
FLAM.A.	FLAMMABLE
FLASH.	FLASHING
FLCO	FLOOR CLEANOUT
FLEX.	FLEXIBLE
FLR	FLOOR(ING)
FLUOR.	FLUORESCENT
FLX.	FLEXIBLE
FPRF.	FIREPROOF
FPL	FLOOR PLATE
FRMG.FRAME	(D), (ING)
FR	FIRE RESISTANT
FRC	FIRE-RESISTANT COATING
FRT	FIRE-RETARDANT
FTG	FOOTING
FUT.	FUTURE
GA.	GAGE
GALV.	GALVANIZED
GB	GRAB BAR
GC	GENERAL CONTRACT(OR)
GCMU	GLAZED CONCRETE MASONRY UNITS
GD.	GRADE, GRADING, GUARD
GEN.	GENERATOR
GF	GROUND FACE
GL.	GLASS
GOV'T.	GOVERNMENT
GR.	GRADE
GVL.	GRAVEL
GRND.	GROUND
GT.	GROUT
GWB	GYPSUM WALL BOARD
GWB-P	GYPSUM WALL BOARD W/ PAINT
GYP.	GYPSUM
HB	HOSE BIB
HC	HANDICAPPED
HD	HEAVY DUTY
HDBD.	HARDBOARD
HDO	HIGH DENSITY OVERLAY PLYWD.
HDR	HEADER
HDW.	HARDWARE
HDWD.	HARDWOOD
HEX.	HEXAGONAL
HGT. or H	HEIGHT
HH	HEAD HEIGHT
HK.	HOOK(S)
HM	HOLLOW METAL
HO	HOLD OPEN
HOM	HOMOSOTE
HORIZ.	HORIZONTAL
HTG.	HEATING
HVAC	HEATING, VENTILATING, AIR CONDITIONING
HWH	HOT WATER HEATER
ID	INSIDE DIAMETER
INCL.	INCLUDE, INCLUSIVE
INSUL.A.	INSULATION
INT.	INTERIOR
INTMD.	INTERMEDIATE
INV.	INVERT
ISOL.	ISOLATION
JAN.	JANITOR
JC	JANITOR'S CLOSET
JF	JOINT FILTER
JT.	JOINT
KIT.	KITCHEN
KO	KNOCKOUT
KPL.	KICKPLATE
L	LENGTH
LAB.	LABORATORY
LAD.	LADDER
LAM.	LAMINATE(D)
LAT.	LATERAL
LAV.	LAVATORY
LB.	POUNDS
LBL.	LABEL
LBP	LEAD BASED PAINT
LC	LEAD COATED
LF	LINEAR FOOT
LH	LEFT HAND
LL	LIVE LOAD
LLV	LONG LEG VERTICAL
LNTL.	LINTEL
LOC.	LOCATION
LP	LIGHT POLE
LT.	LIGHT
LTWT	LIGHT WEIGHT
LVR.	LOUVER
LWC	LIGHTWEIGHT CONCRETE
M	METER
MACH.	MACHINE
MAS.	MASONRY
MATL.	MATERIAL
MAX.	MAXIMUM
MBR.	MEMBER
MC	MECHANICAL CONTRACTOR
MDO	MEDIUM DENSITY OVERLAY PLYWOOD
MEAS.	MEASUREMENT
MECH.	MECHANIC(AL)
MED.	MEDIUM
MEMB.	MEMBRANE
MET.	METAL
MEZZ.	MEZZANINE
MFR	MANUFACTURE(ER)
MGT.	MANAGEMENT
MGR.	MANAGER
MH	MANHOLE
MIN.	MINIMUM
MIR.	MIRROR
MISC.	MISCELLANEOUS
M/L	MATCH LINE
MLDG.	MOLDING, MOULDING
MLWK.MILLWORK	
MMB.	MEMBRANE
MO	MASONRY OPENING
MOD.	MODULAR
MOV.	MOVABLE
MR	MOISTURE RESISTANT
MTD.	MOUNTED(ED), (ING)
MTL.	METAL
MTNDET.	MOTION DETECTOR
MULL.	MULLION
MWK.	MILLWORK
N	NORTH
N/A	NOT APPLICABLE
NAT.	NATURAL
NEC.	NECESSARY
NI.	NICKEL
NIC	NOT IN CONTRACT
NO	NUMBER
NOM.	NOMINAL
NONCOMB.	NON-COMBUSTIBLE
NR	NOISE REDUCTION
NRC	NOISE REDUCTION COEFFICIENT
NTS	NOT TO SCALE
OA	OVERALL, OUTSIDE AIR
OB.	OBSCURE
OC	ON CENTER
OD	OUTSIDE DIAMETER
OFF.	OFFICE
OPG.	OPENING
OPP.	OPPOSITE
OPP.HND	OPPOSITE HAND
ORIG.	ORIGINAL
OVHD.	OVERHEAD
P, P*	PAINT, PAINT COLOR
PAR.	PARALLEL
PART.BD	PARTICLE BOARD
PAVMT.	PAVEMENT
PB	PANELBOARD
PC	PORTLAND CEMENT
PCC	PRECAST CONCRETE
PCF	POUNDS PER CUBIC FOOT
PED.	PEDESTAL
PERF.	PERFORATE(D)
PERIM.	PERIMETER
PFL	POUNDS PER LINEAR FOOT
PKG.	PARKING, PACKAGE
PL	PROPERTY LINE, PLATE
PLAM	PLASTIC LAMINATE
PLAS.	PLASTER
PLYWD.	PLYWOOD
PLMB.	PLUMBING
PNL.	PANEL
PNT.	PAINT(ED)
PR	PAIR
PREP.	PREPARE, PREPARATION
PROP.	PROPOSED
PROT.	PROTECTION
PSF	POUNDS PER SQUARE FOOT
PSI	POUNDS PER SQUARE INCH
PT.	POINT
PTD.	PAPER TOWEL DESPENSER, PAINTED
PTN.	PARTITION
PTR	PAPER TOWEL RECEPTOR
PVC	POLYVINYL CHLORIDE
PVMT.	PAVEMENT
QT	QUARRY TILE
QTY.	QUANTITY
R	RISER
RA	RETURN AIR
RAD.	RADIUS
RBC	RUBBER BASE COVED
RBS	RUBBER BASE STRAIGHT
RBT	RUBBER TILE
RCP	REINFORCED CONCRETE PIPE
RD	ROOF DRAIN
REC.	RECESSED
REF.	REFER, REFERENCE
REFL.	REFLECTED (IVE)(OR)
REFR.	REFRIGERATED, REFRIGERATOR
REG.	REGISTER
REINF.	REINFORCED(ING)
REM.	REMOVE
REQ'D.	REQUIRED
RESIL.	RESILIENT
RET.	RETURN, RETAINING
REV.	REVISION(S), REVISED
RFG.	ROOFING
RFL.	REFLECT(ED), (IVE), (OR)
RH	RIGHT HAND
RLG.	RAIL(ING)
RM.	ROOM
RO	ROUGH OPENING
ROW	RIGHT OF WAY
RR	RAILROAD
RS	RUBBLE STONE
RT.	RIGHT
RVS.	REVERSE
RVT.	RIVET
S	SOUTH
SAN.	SANITARY
SAT	SUSPENDED ACOUSTICAL TILE CEILING
SAP	SUSPENDED ACOUSTICAL PANEL CEILING
SC	SOLID CORE
SCHED.	SCHEDULE
SCN.	SCREEN
SD	STORM DRAIN
SEC.	SECURITY
SECT.	SECTION
SERV.	SERVICE
SF	SQUARE FOOT
SFGL.	SAFETY GLASS
SG	SHEET GLASS
SHT.	SHEET
SIM.	SIMILAR
SP	SOUNDPROOF
SPEC.	SPECIFICATION(S)
SPKR	SPEAKER
SQ.	SQUARE
SH	SILL HEIGHT
SS	SERVICE SINK
S.STL	STAINLESS STEEL
STA.	STATION
STD.	STANDARD
STDS.	STUDS
STG.	SEATING
STL.	STEEL
STOR.	STORAGE
STRUCT.	STRUCTURE, STRUCTURAL
SUSP.	SUSPENDED
SW	SOLID CORE WOOD (DOOR)
SYM.	SYMMETRY (ICAL)
SYS.	SYSTEM
T	TREAD
TC	TREAD COVER
T/	TOP OF
T/S	TOP OF SLAB
T/W	TOP OF WALL
T/FTG.	TOP OF FOOTING
T & G	TONGUE AND GROOVE
TEL.	TELEPHONE
TEMP.	TEMPERED, TEMPORARY
THK. or T	THICK(NESS)
TKBD.	TACKBOARD
TME	TO MATCH EXISTING
TOIL.	TOILET
TOL.	TOLERANCE
TP	TOILET PAPER
TPD.	TOILET PAPER DISPENSER
TPTN	TOILET PARTITION
TYP.	TYPICAL
UL	UNDERWRITERS LABORATORIES
UNFIN.	UNFINISHED
UNO	UNLESS NOTED OTHERWISE
UTIL.	UTILITY
UR	URINAL
UV	UNIT VENTILATOR
VARN.	VARNISH
VB	VAPOR BARRIER
VB	VINYL BASE
VBC. or S.	VINYL BASE COVED OR STRAIGHT
VERT.	VERTICAL
VEST.	VESTIBULE
VIF	VERIFY IN FIELD
VIN.	VINYL
VJ	V-JOINT(ED)
VT	VINYL TILE
W	WIDE FLANGE
W	WEST, WIDTH, WIDE
W/	WITH
W/O	WITHOUT
WC	WATER CLOSET
WD.	WOOD
WDP.	WOOD PANEL (DOOR)
WDW.	WINDOW
WH	WALL HUNG
WI	WROUGHT IRON
WIND.	WINDOW
WMT	WATER METER
WM	WIRE MESH
WP	WATERPROOFING
WPPG.	WATER PROOFING
WR	WATER REPELLENT
WT.	WEIGHT
WTR.	WATER
WTRPRF.	WATERPROOF
WWF	WELDED WIRE FABRIC

(0505.03-esabbrev-a)

NTS

DEFINITIONS*

A. DEMO: DETACH ITEMS FROM EXISTING CONSTRUCTION AND LEGALLY DISPOSE OF OFF-SITE.

B. REMOVE AND SALVAGE: DETACH ITEMS FROM EXISTING CONSTRUCTION AND DELIVER THEM TO THE CONTRACTING OFFICER READY FOR REUSE.

C. REMOVE AND REINSTALL: DETACH ITEMS FROM EXISTING CONSTRUCTION, PREPARE FOR REUSE, AND REINSTALL WHERE INDICATED.

D. EXISTING TO REMAIN: EXISTING ITEMS OF CONSTRUCTION THAT ARE NOT TO BE REMOVED AND THAT ARE NOT OTHERWISE INDICATED TO BE REMOVED, REMOVED AND SALVAGED, OR REMOVED AND REINSTALLED.

E. "FURNISH": SUPPLY, DELIVER TO PROJECT SITE, AND UNLOAD.

F. "INSTALL": ASSEMBLE, AND ERECT, COMPLETE AND READY FOR THE INTENDED USE.

G. "PROVIDE": FURNISH AND INSTALL.

* SEE MP0.1 FOR DEFINITIONS RELATING TO MECHANICAL AND PLUMBING WORK
SEE E0.1 FOR SYMBOL SUBSCRIPTS RELATING TO DEMOLITION, RESTORATION & NEW WORK

(0505.03-esdfns-a)

ARCHITECTURAL GENERAL NOTES

1. DRAWING ACCURACY: LOCATIONS AND SIZES OF EXISTING BUILDING ELEMENTS WERE OBTAINED THROUGH LIMITED FIELD OBSERVATION AND REVIEW OF AVAILABLE EXISTING RECORDS. VERIFY ALL EXISTING CONDITIONS AND DIMENSIONS PRIOR TO START OF CONSTRUCTION. WHEN ANY DISCREPANCY OR CONFLICT IS DETECTED NOTIFY THE COR IMMEDIATELY AND PRIOR TO COMENCING WORK.
2. SEE SPECIFICATION FOR CUTTING AND PATCHING AND SELECTIVE DEMOLITION FOR WORK NOT NECESSARILY SHOWN ON THE DRAWINGS.
3. PAINT ALL EXPOSED CONDUITS TO MATCH EXISTING WALL FINISH IN PROJECT WORK AREAS.

(0505.14-archgennotes)

ARCHITECTURAL SYMBOL KEY

NUM / CUT DRW — BUILDING SECTION, SHT DRAWN ON, SHT CUT ON
NUM / DRW — BUILDING SECTION, SHT DRAWN ON
NUM / CUT DRW — DETAIL/SECTION, SHT DRAWN ON, SHT CUT ON
NUM / DRW — PLAN, SHT DRAWN ON
EXX / XXX — INTERIOR ELEVATION
SHT NO.
REVISION
DEMO NOTES
NEW WORK NOTES
ASSEMBLY TYPE SEE SHEET AE6.1
PHOTO KEY - SEE SPEC. SECTION 01322
DEMO AREA
DEMO DOOR
DEMO WALL
LIGHTING, FAN — EXIST. CEILING FIXTURES TO REMAIN. SEE MECH & ELEC.
EXISTING RADIATOR. SEE MECH. FOR WORK.

NORTH — NORTH ARROW
XXX — ROOM NUMBER
XXX — DOOR LABEL
XXX — WINDOW LABEL
ELEVATION IN SECTION & ELEVATION
PLAN - SPOT ELEVATION
PL — PROPERTY LINE
℄ — CENTER LINE
EXISTING FENCE LINE
ALIGN
CONCRETE/ MORTAR
STEEL
MASONRY: CMU, BRICK
RIGID INSULATION
AREAS OF ROOF WORK
FINISH WOOD
FRAMING LUMBER
PLYWOOD
NEW FINISH AREA
DEMO / NEW ASPHALT AREA
AREA OF FLOOR WORK (ENTIRE ROOM).
AREA OF FLOOR WORK (SPOT REPAIR)
NEW WALL
NEW LOW WALL
ETR WALL
LIGHTING — NEW CEILING FIXTURES. REMOVE EXISTING & INSTALL NEW. SEE ELEC.

DEMO NOTES

1. DEMO EXISTING ASPHALT PAVING, CONCRETE RAMP AND PLANTER IN AREAS SHOWN ON AE 2.1
2. REMOVE RADIATOR & REMOVE PAINT FROM RADIATOR. STORE RADIATOR FOR REINSTALLATION DURING NEW WORK. CLEAN FLOOR OR CEILING AT RADIATOR.
3. REFER TO LIGHTING PLANS FOR DEMO OF EXISTING FIXTURES (TYP.)

(0505.14E-worknotes-a)

NEW WORK NOTES

1. REPAIR PLASTER AT DAMAGED AREAS AND BEHIND EXISTING RADIATORS. REPAIR PLASTER AREAS MODIFIED FOR /BY CONSTRUCTION WORK . REPAINT.
2. PROVIDE NEW GWB AT CEILING TO REESTABLISH REQUIRED 1 HOUR FIRE SEPARATION . PROVIDE FIRESTOPPING AT GAPS.
3. PROVIDE NEW VINYL TILE FLOORING AT DAMAGED FLOOR AREAS. PROVIDE NEW PLYWOOD SUBFLOORING AS NEEDED.
4. PROVIDE NEW ACOUSTIC CEILING TILES TO REPLACE EXTG. WATER DAMAGED TILES.
5. DEMO EXTG. ACT CEILING. PROVIDE NEW GRID SUPPORT SYSTEM AND NEW ACOUSTIC CEILING TILES. RETAIN AND REINSTALL EXISTING LIGHTING FIXTURES IN NEW CEILING.
6. DISINFECT & CLEAN MOLD & MILDEW FROM CEILING . REPAINT.
7. REPLACE DAMAGED OR MISSING VINYL FLOOR TILES UNDER RADIATORS, WHILE THEY ARE OUT FOR PAINT REMOVAL . PROVIDE NEW PLYWOOD SUBFLOORING AS NEEDED.
8. REMOVE & PROVIDE NEW ACT SYSTEM . REMOVE AND REINSTALL EXTG. LIGHT FIXTURES IN ORDER TO PERFORM STRUCTURAL REPAIRS. PROVIDE NEW ACOUSTIC CEILING TILES, & GRID.
9. REPOINT MASONRY WALL IN AREA INDICATED. NEW WORK TO DUPLICATE EXISTING JOINT WIDTH, FINISH & TOOLING PROFILE.
10. SEAL JOINT.
11. REMOVE AND REPLACE, REGRADE SOIL TO ALLOW REPOINTING TO ONE INSET HORIZONTAL ACCENT BAND BELOW BASEMENT WINDOW SILL.
12. REMOVE & REINSTALL EXISTING COPPER DOWNSPOUTS AND ANCHORS TO ACCOMMODATE REPOINTING WORK .
13. REMOVE & REINSTALL EXISTING ELECTRICAL LINES AND EQUIPMENT TO ALLOW REPOINTING BEHIND.
14. REPOINT CMU FILLED WINDOW AREA & SEAL PERIMETER BTW. BRICK & CMU .
15. PROVIDE LEVEL (NO GREATER THAN A 2% SLOPE IN ANY DIRECTION) ACCESSIBLE ACCESS AISLE AND VAN PARKING SPACE. PROVIDE LEVEL TRANSITION TO EXTG. SIDEWALK & ACCESSIBLE ENTRANCE .
16. PROVIDE NEW ASPHALT PARKING AREA TO CREATE SMOOTH TRANSITION FROM EXISTING LOT TO LEVEL ACCESSIBLE SPACES. GRADE TO PROVIDE POSITIVE DRAINAGE TO EXISTING STORM SWALES AND/OR DRAIN INLETS AND TO PREVENT PONDING ON FINISHED SURFACES AND CREATION OF LOW POINTS.
17. PROVIDE CONCRETE WHEEL STOPS & ADA-COMPLIANT PARKING SIGN . CONTRACTOR HAS THE OPTION OF SALVAGING & REINSTALLING EXISTING.
18. STRIPE ACCESSIBLE PARKING AREA AND STANDARD SPACES
19. REMOVE EXISTING FLEXIBLE "RUBBER" & ALUM. PATCHES WHERE SHOWN . SEE DETAILS 1 & 2 AE5.2 FOR TYP. NEW ROOF PATCHES.
20. AT EDGE OF METAL ROOF PANELS TO VALLEY SHEET FLASHING, SEE DETAILS 1 & 2 AE5.2 FOR TYP. NEW ROOF PATCHES (SIM.)
21. REMOVE & INSTALL NEW STRUCTURAL STEEL PLATES AT CHIMNEY STACK. SEE STRUCTURAL.
22. PROVIDE NEW CONCRETE CURB.
23. PROVIDE NEW VINYL TILE FLOORING
24. REMOVE AND REINSTALL SECURITY GRILL
25. REMOVE, REPAINT AND REINSTALL RADIATOR COVERS
26. PROVIDE WHEEL STOPS
27. PROVIDE MAX 5% SLOPE FROM SOUTH END OF PARKING SPACE AND ACCESSWAY TO NORTH CONCRETE SIDEWALK.
28. GRADE NEW ASPHALT TO BLEND WITH EXISTING ASPHALT EDGE.
29. PAINT & REINSTALL RADIATOR. REFER TO MECH. FOR FURTHER INSTRUCTION.

(0505.14E-worknotes-a)

FINAL

DESIGNED	RS				
DRAWN	BC	1	11/29/10	ARCH. NOTE ADDED	BC	RS
CHECKED	RW	REVISION	DATE	DESCRIPTION	BY	APP.

CERTIFICATION — DISTRICT OF COLUMBIA, JOHN R. FRANKLIN, No.4616, REGISTERED ARCHITECT

NOTES, SYMBOLS AND ABBREVIATIONS — ARCHITECTURAL

RENOVATION AT TWO SHELTERS
EMERY SHELTER
1725 LINCOLN RD., NE

DRAWING NO. AE0.1

CHIEF DESIGN & ENGINEERING DIVISION
DATE _____

REGISTRATION NO. 4616
DATE __OCT_1989__
ARCHITECT
architrave p.c., architects
WASHINGTON, DC 20003

GOVERNMENT OF THE DISTRICT OF COLUMBIA
DEPARTMENT OF REAL ESTATE SERVICES

PROJ. NO. PL101C-HS-017
BLDG. NO. 2403
DATE: 10/11/2010
SHEET 2 OF 52

1"=10' | 1"=20' | 1"=50' | 1'=100' | 1"=200' | 1"=400' | 3"=1'-0" | 11/2"=1'-0" | 1"=1'-0" | 3/4"=1'-0" | 1/2"=1'-0" | 3/8"=1'-0" | 1/4"=1'-0" | 3/16"=1'-0" | 1/8"=1'-0" | 3/32"=1'-0" | 1/16"=1'-0" | 1/16"=1'-0"

(0505.03-esdsymbol-a)

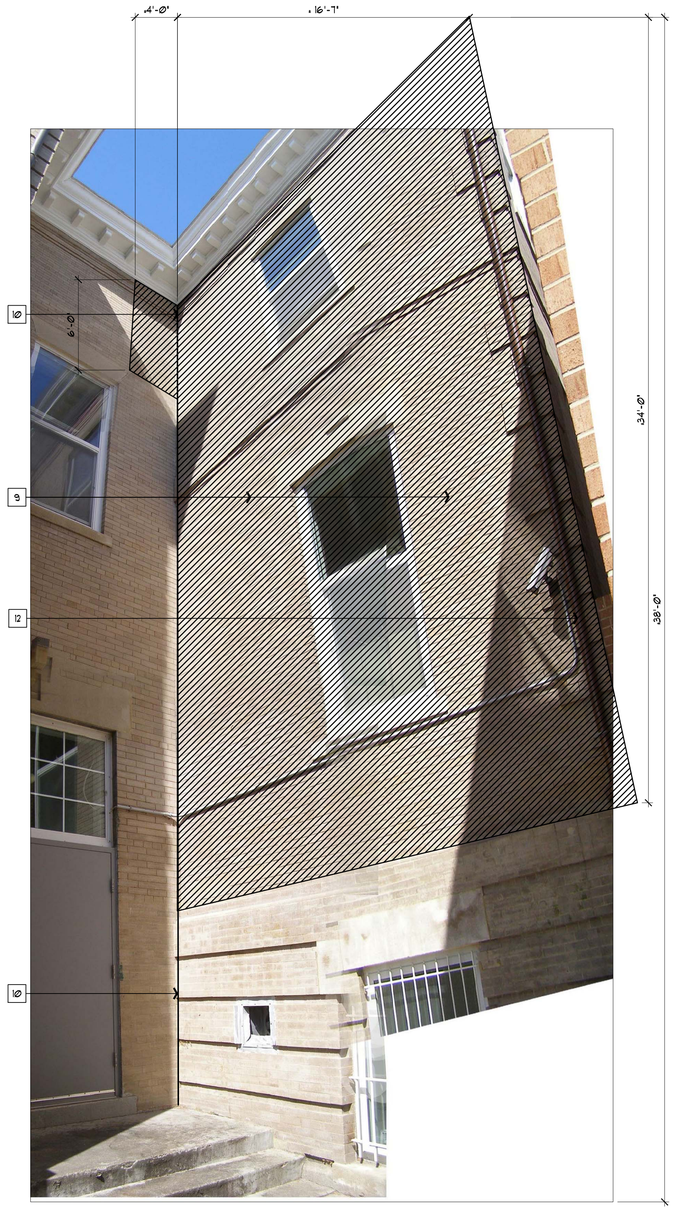

4 AE3.3 EAST WING - SOUTHWEST ELEVATION

(#0505.14e1/2ae3.3 1/2addl)

SCALE: NTS

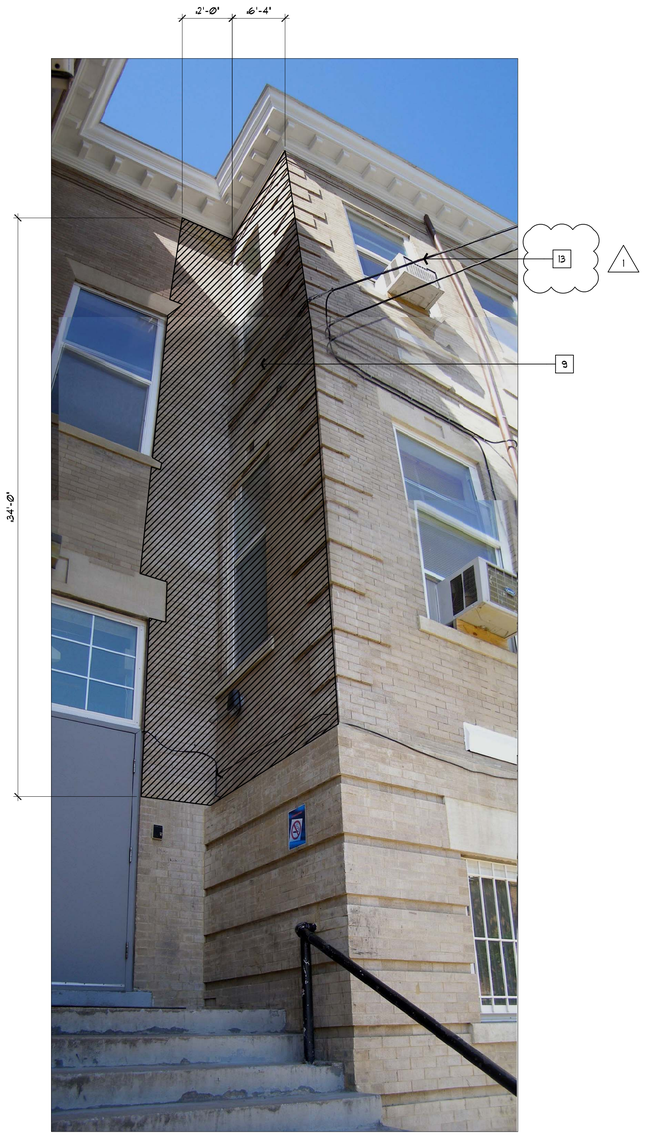

5 AE3.3 CENTRAL CORE - SOUTHWEST CORNER

(#0505.14e1/2ae3.3 1/2addl)

SCALE: NTS

6 AE3.3 WEST WING - WEST AND NORTH ELEVATIONS

(#0505.14e1/2ae3.3 1/2addl)

SCALE: NTS

FINAL

DESIGNED					
DRAWN	1	11/29/10	NOTES RELOCATED	BC	RS
CHECKED	REVISION	DATE	DESCRIPTION	BY	APP.

CERTIFICATION

DISTRICT OF COLUMBIA JOHN R. FRANKLIN No.4616 REGISTERED ARCHITECT

EXTERIOR ELEVATION PHOTOGRAPHS

ARCHITECTURAL

RENOVATION AT TWO SHELTERS
EMERY SHELTER
1725 LINCOLN RD., NE

DRAWING NO.

AE3.3

CHIEF DESIGN & ENGINEERING DIVISION

DATE _____

REGISTRATION NO. 4616
DATE ___ OCT. 1989 ___

ARCHITECT
architrave p.c., architects
WASHINGTON, DC 20003

GOVERNMENT OF THE DISTRICT OF COLUMBIA
DEPARTMENT OF REAL ESTATE SERVICES

PROJ. NO. PL101C-HS-017
BLDG. NO. 2403
DATE: 10/11/2010
SHEET 13 OF 52

1"=10' | 1"=20' | 1"=50' | 1"=100' | 1"=200' | 1"=400' | 3"=1'-0" | 11/2"=1'-0" | 1"=1'-0" | 3/4"=1'-0" | 1/2"=1'-0" | 3/8"=1'-0" | 1/4"=1'-0" | 3/16"=1'-0" | 1/8"=1'-0" | 3/32"=1'-0" | 1/16"=1'-0" | 1/16"=1'-0"

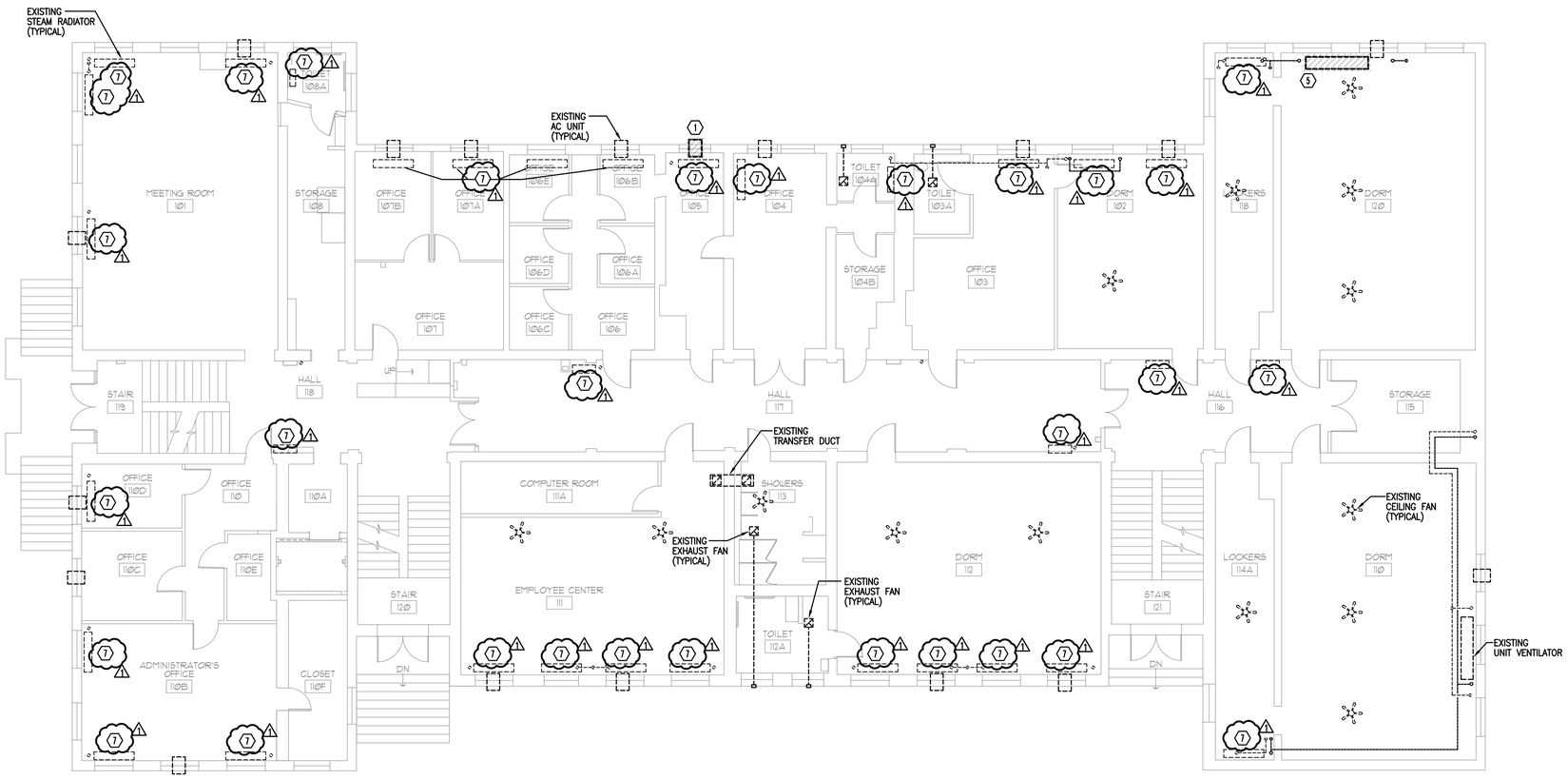

DEMOLITION NOTES:

1. DEMOLISH EXISTING AC UNIT AND ASSOCIATED CONTROLS AND SUPPORTS.
2. DISCONNECT AND REMOVE EXISTING RADIATOR TO BE REINSTALL. REMOVE PIPING AND SUPPORTS. REMOVE PAINT FROM RADIATOR. EXISTING THERMOSTATIC VALVE TO BE REUSED.
3. DEMOLISH EXISTING STEAM PIPING LOCATED ABOVE ELECTRICAL ROOM.
4. DEMOLISH EXITING WATER TREATMENT SYSTEM INCLUDING PUMP, ASSOCIATED PIPING AND SUPPORT.
5. DEMOLISH UNIT VENTILATOR AND ASSOCIATED PIPING, CONTROLS AND SUPPORT.
6. DISCONNECT AND REMOVE EXISTING RADIATOR TO BE RELOCATED IN OFFICE 110C AND DORM 213. REMOVE ASSOCIATED PIPING, CONTROLS AND SUPPORT. REMOVE AND CAP PIPING AT MAIN BRANCH. REMOVE PAINT. EXISTING THERMOSTATIC VALVE TO BE REUSED.
7. DISCONNECT EXISTING RADIATOR. REMOVE PAINT FROM RADIATOR. EXISTING THERMOSTATIC VALVE TO BE REUSED.
8. DISCONNECT EXISTING PIPING TO UNIT VENTILATOR ABOVE. CAP PIPES TO BE RE-CONNECTED.

FINAL

1 / ME-4

FIRST FLOOR MECHANICAL PLAN - DEMOLITION

SCALE: 1/8" = 1'-0"

NORTH

	DESIGNED W					
	DRAWN W	1	11/15/10	REFERENCED NOTE 7	MB	MB
	CHECKED MB	REVISION	DATE	DESCRIPTION	BY	APP.
	CERTIFICATION	FIRST FLOOR MECHANICAL PLAN – DEMOLITION			MECHANICAL	
		RENOVATION AT TWO SHELTERS EMERY SHELTER 1725 LINCOLN RD., NE			DRAWING NO. ME–4	
CHIEF DESIGN & ENGINEERING DIVISION DATE _____	REGISTRATION NO. xxx DATE JUNE 1979 ARCHITECT architrove p.c., architects WASHINGTON, DC 20003	GOVERNMENT OF THE DISTRICT OF COLUMBIA DEPARTMENT OF REAL ESTATE SERVICES			PROJECT NO. PL101C–HS–017 BLDG. NO. 2403 DATE: 10/11/2010 SHEET 25 OF 52	

1"=10' | 1"=20' | 1"=50' | 1'=100' | 1"=200' | 1"=400' | 3"=1'-0" | 11/2"=1'-0" | 1"=1'-0" | 3/4"=1'-0" | 1/2"=1'-0" | 3/8"=1'-0" | 1/4"=1'-0" | 3/16"=1'-0" | 1/8"=1'-0" | 3/32"=1'-0" | 1/16"=1'-0" | 1/16"=1'-0"