AMENDMENT OF SOLICITATION/MODIFICATION OF CONTRACT	1. Contract Number	Page of Pages 1 | 1

2. Amendment/Modification Number	3. Effective Date	4. Requisition/Purchase Request No.	5. Solicitation Caption
DCAM-2009-B-0017-M02	14-Apr-09		Ward 1 Senior Wellness Center

6. Issued By: Code	7. Administered By (If other than line 6)
Office of Contracting and Procurement Construction, Design and Building Renovation Group 441 4th Street, NW, Suite 700 South Washington, DC 20001	Office of Property Management 2000 14th Street, N.W., 8th Floor Washington, DC 20009

8. Name and Address of Contractor (No. Street, city, country, state and ZIP Code)		
	(X)	9A. Amendment of Solicitation No. DCAM-2009-B-0017
		9B. Dated (See Item 11) 23-Mar-09
		10A. Modification of Contract/Order No.
		10B. Dated (See Item 13)
Code Facility		

11. THIS ITEM ONLY APPLIES TO AMENDMENTS OF SOLICITATIONS

[ ] The above numbered solicitation is amended as set forth in Item 14. The hour and date specified for receipt of Offers [x] is extended. [ ] is not extended. Offers must acknowledge receipt of this amendment prior to the hour and date specified in the solicitation or as amended, by one of the following methods: (a) By completing Items 8 and 15, and returning 1 copies of the amendment: (b) By acknowledging receipt of this amendment on each copy of the offer submitted; or (c) By separate letter or fax which includes a reference to the solicitation and amendment number. FAILURE OF YOUR ACKNOWLEDGEMENT TO BE RECEIVED AT THE PLACE DESIGNATED FOR THE RECEIPT OF OFFERS PRIOR TO THE HOUR AND DATE SPECIFIED MAY RESULT IN REJECTION OF YOUR OFFER. If by virtue of this amendment you desire to change an offer already submitted, such change may be made by letter or fax, provided each letter or telegram makes reference to the solicitation and this amendment, and is received prior to the opening hour and date specified.

12. Accounting and Appropriation Data (If Required)

13. THIS ITEM APPLIES ONLY TO MODIFICATIONS OF CONTRACTS/ORDERS, IT MODIFIES THE CONTRACT/ORDER NO. AS DESCRIBED IN ITEM 14

(X)	A. This change order is issued pursuant to: (Specify Authority) The changes set forth in Item 14 are made in the contract/order no. in item 10A.
	B. The above numbered contract/order is modified to reflect the administrative changes (such as changes in paying office, appropriation date, etc.) set forth in item 14, pursuant to the authority of 27 DCMR, Chapter 36, Section 3601.2.
	C. This supplemental agreement is entered into pursuant to authority of:
	D. Other (Specify type of modification and authority)

E. IMPORTANT: Contractor [ ] is not, [ ] is required to sign this document and return _____ copies to the issuing office.

14. Description of amendment/modification (Organized by UCF Section headings, including solicitation/contract subject matter where feasible.)

Solicitation No. DCAM-2009-B-0017, is hereby amended as follows:

(1). Proposal submission date of April 23, 2009, by 2:00 pm local time is hereby extended to April 29, 2009, by 2:00 pm, local time.

(2). Questions submission deadline extended from April 10, 2009, to April 17, 2009.

(2). Additional Questions and Answers, (Attachment A).

(3). Revised Drawings List and Drawings, Attachment B).

(4). Revised Specifications, (Attachment C).

(5). Revised Price Breakdown Form, (Attachment D).

(6). Specifications for Ward 1 Senior Wellness Center Dedication Plaque, (Attachment E).

(7). Pre-bid Conference Attendees and Plan Holders List, (Attachment F).

(8). All other terms and conditions remain the same.

Except as provided herein, all terms and conditions of the document referenced in Item (9A or 10A) remain unchanged and in full force and effect

15A. Name and Title of Signer (Type or print)		16A. Name of Contracting Officer Diane Wooden	
15B. Name of Contractor (Signature of person authorized to sign)	15C. Date Signed	16B. District of Columbia Diane Wooden (Signature of Contracting Officer)	16C. Date Signed 4/14/09

Attachment A

Ward 1 Senior Wellness Center

DCAM-2009-B-0017
Questions and Answers

(1). **Q:** If a proposed Subcontractor/CBE does not have prior LEED experience, does he/she have an opportunity to participate in this project?

A: Yes, the LEED requirement is for the Prime Contractor.

(2). **Q:** If the offeror is a USGBC member and has LEED AP Certification, but has not completed a prior LEED project; will they be eligible to bid?

A: No

(3). **Q:** Does the LEED Certification type need to be "NC" for the special preference?

A: No, any LEED Certification is acceptable. It does not have to be new construction.

(4). **Q:** The relevant LEED experience, must it be silver or can it be certified?

A: Any LEED project is acceptable.

(5). **Q:** IFB under item 11 calls for "Standard Contract Provisions" dated 1973. The website has "2007". Which one so we use?

A: 2007

(6). **Q:** Is funding in place for this contract?

A: Yes

(7). **Q:** Do you have building permit on hand?

A: Yes

(8). **Q:** Do you have Pepco allowance for permanent power?

A: Yes

(9). **Q:** Any obligation for any contractors from previous contract?

A: No

(10). **Q:** What's the requirement for LSDBE?

A: Mandatory 35% SBE subcontracting requirement in accordance with Section M.1.6.

(11). **Q:** I am trying to get a list of current plan holders for the Solicitation DCAM-2009-B-0017, Project # EA 129 C, Ward 1 Senior Wellness Center project that is out for bid. Is this something that you can fax or e-mail to me?

A: Plan Holders List is attached.

(12). **Q:** Article 1 of the Standard Contract Provisions (Jan. 2007 Revision) requires bidders who have not completed comparable work for the District in the last 5 years to provide certain information to the Contracting Officer as a qualification for bidding, at the Contracting Officer's discretion. Our company is a portion of a joint venture Corporation being formed to propose on this work. Neither party has similar experience with the District, however both parties have much experience with the types of work contained in this RFP, and would be able to offer excellent references for our abilities. What types of qualifying documentation are being sought by OCP with regard to this contract provision in order to allow our partnership to propose on this work?

A: As cited in Article 1, any Bidder who has not performed comparable work for the District within the last 5 years shall submit a certified statement of his organization, plant, manpower, financial resources, and construction experience that he considers will qualify him for proposed contract. This information shall be certified by a Certified Public Accountant for contracts over $25,000 and submitted on the AGC Form "Standard Questionnaires and Financial Statement for Bidders", obtainable from the Associated General Contractors of America, Inc.., at 1957 "B" Street, N. W., Washington, D. C., 20008, on an approved equivalent form.

(13). **Q:** As discussed at the pre-bid meeting, please provide copies of the approved sheeting and shoring plan and the sheeting and shoring permit.

A: Sheeting and Shoring plans are included for reference only to show the extent of effort. The contractor shall be responsible for the sheeting and shoring design and procuring the required permits.

(14). **Q**: Confirm that the owner has/will procure the public space permit(s) for the project.

A: The procurement of all public space, traffic control plans, and trade permits is the responsibility of the Contractor. The District will only provide the DCRA Building permit.

(15). **Q:** Is the project tax exempt?

A: Yes, only the construction portion is tax exempt. For further details offerors must review attached Article-25 "Taxes" of the Districts Standard for Construction Contracts dated Jan, 2007 and the District's latest Tax Codes as applicable (including 9 DCMR, Section 438).

(16). **Q:** Drawings call for operable windows, but no specifications are provided for same. Please address.

A: See new specification section 085200 Aluminum Windows.

(17). **Q:** Section 051200 requires an AISC certified steel subcontractor. We have several SBE contractors who would be perfect for the project, but are not AISC certified. Can this requirement be waived?

A: The requirement for AISC certification cannot be waived.

18). **Q:** Please provide a copy of the Hazmat certification confirming that this is a clean site.

A: This clearance was provided as part of the razing process of the previous structures.

19). **Q:** We are reviewing the requirements of the subject solicitation. We found in the section H12, page 66 of the solicitation, which states, "Bidder must have completed a minimum of 2 construction projects where LEED certification was achieved. As part of the responsibility determination, the low bidder will be required to provide Project Names + Owner and A/E contact information."

We have been actively supporting many Federal and local government clients for past 15 years, and have not come across a requirement for LEED certification on a building. We understand there are some contractors who have the required experience.

To meet the LEED certification requirement, will you allow the low bidder's qualification to be augmented through its construction team members, such as a LEED Certification Commissioning Agent and subcontractors?

A: No. The prime contractor's firm must have a minimum of two (2) verified LEED certified projects (any level of LEED certification).

Attachment B

Ward 1 Senior Wellness Center

Revised Drawings List

A. DRAWINGS:

1. At sheet CS-1 revise the following:
   A. Revise date to read: April 1, 2009
   B. Revise Sol. No. to read: DCAM-2009-B-0017

2. At sheet C-4 revise as follows:
   A. Add Note 13 to General Notes. Note 13 to read: Provide gas connection from existing 6" Gas Line in Georgia Avenue to building. Coordinate with Washington Gas Company. See Mechanical Drawings for more information.
   B. Add Note 14 to General Notes. Note 14 to read: Provide new concrete sidewalk and granite curb at full extent of Newton Place, UON. Provide new concrete sidewalk at full extent of Georgia Avenue, UON. Re-use existing granite curb except where damaged by construction processes. See Architectural drawings for extent of new stamped concrete pavers.
   C. Add Note 15 to General Notes. Note 15 to read: Repair Newton Place asphalt pavement, base, etc. per DC standards to its original condition where road has been damaged to accommodate the installation of new 6" and 8" water main. See sheet Cx for extent shown diagrammatically.
   D. Add Note 16 to General Notes. Note 16 to read: See Architectural drawings for extend of landscaping strip at west side of building.
   E. Add Note 17 to General Notes. Note 17 to read: Provide sheeting and shoring at and around the sand filter as required to eliminate the need to underpin the adjacent property.
   F. Add Note 18 to General Notes. Note 18 to read: Use the south property line as the base line for the building. Construct the building parallel to the base line. The datum point for the building is to be the southeast corner of the building, which is to be 15'-0" from the east property line.

3. At sheet C-11 Green Roof Plant Mix revise as follows:

   A. Delete 'Sedum Acre' and replace with 'Sedum Sexangulare'
   B. Delete 'Sedum Aizoon' and replace with 'Sedum Floriferum Weihenstephaner Gold"
   C. Delete 'Sedum Sarmentosum' and replace with 'Delosperma Latifolia var. Eckloni's"
   D. Delete 'Petrorhagia Saxifrage' and replace with 'Guara Lindheimeri'

4. At all sheets where occurs revise as follows:
   A. Replace "Limestone Veneer" with "Architectural Precast Panel Veneer".
   B. Replace "Limestone Panel" with "Architectural Precast Panel".
   C. Replace "Limestone Joint" with "Architectural Precast Panel Joint".
   D. Replace "Limestone Connections" with "Architectural Precast Panel Connections".

E. Replace "Limestone Horizontal Rustication" with "Architectural Precast Panel Horizontal Rustication".
F. Replace "Top of Limestone" with "Top of Architectural Precast Panel".
G. Replace "Thick Limestone" with "Thick Architectural Precast Panel".
H. Replace "Stone" with "Architectural Precast".
I. Replace "Stone Veneer Sawn Ashlar Limestone" with "Architectural Precast Panel".
J. Replace "Stone Panel" with "Architectural Precast Panel".
K. Replace "Stone Installations" with "Cast Stone Installations".
L. Replace "Stone Cap" with "Cast Stone Cap".
M. Replace "Stone Coping" with "Cast Stone Coping".
N. Replace "Stone Sill" with "Cast Stone Sill".
O. Replace "Stone Band" with "Cast Stone Band".
P. Replace "Stone Cornice" with "Cast Stone Cornice".
Q. Replace "Limestone Sill" with "Cast Stone Sill".
R. Replace "Limestone Band" with "Cast Stone Band".
S. Replace "Limestone Cornice" with "Cast Stone Cornice".

5. At sheet A-153, delete all references to Details 1/A-351, 3/A-352, 4/A-352 and 5/A-352.

6. At sheet E-201, add Note 3 to Keyed Electrical Notes. Note 3 to read: Contractor to furnish and install recessed intercom at front door No. 2, rear door No. 3 and rooftop door No. 404. Intercoms are to communicate with Receptionist Desk. Provide power from Panel EM. Basis of Design: Provide AIPHONE model #MK-2MCD-A Kit with PMU (KG32EU), Door Release (EL95), Multi-door Release Adaptor (RY-3DL) with 4-Conductor 18AWG wire.

7. Replace the following sheets with new sheets of the same name noted as Addendum 1:

CS-1	AS-01	S-2	E-103	P-101
	A-101	S-3	E-203	P-102
	A-102	S-4		P-103
	A-103	S-9		P-201
	A-201	S-10		P-202
	A-202			
	A-301			
	A-302			
	A-352			
	A-406			
	A-501			
	A-502			
	A-503			
	A-621			
	A-661			
	A-851			

8. At sheet S-4, revise Column 16 Base Plate to read: 6" x ¾" x 12".

9. At sheet S-5, revise Detail 11 as follows:
   A. Revise horizontal dimension from 24" to 18".
   B. Revise vertical dimension from 16" to 14".

10. Add the following sheets for reference:
   A. Sheeting and Shoring Plan Drawing – Drawing 1 of 2
   B. Sheeting and Shoring Sections, Details and Design – Drawing 2 of 2

11. At sheet M-201 revise Condensing Unit Schedule Note to read: Condensing units shall be air-cooled units with condenser fan, semi-hermetic compressor and low ambient operation. Use Carrier, Model 58MXB as Basis of Design.

Attachment C

Ward 1 Senior Wellness Center

Revised Specifications

A. SPECIFICATIONS:

1. Revise Table of Contents (Page 7) as follows:
   A. Add section 012100 Allowances
   B. Add section
   C. Add section 034500 Architectural Precast Concrete
   D. Delete section 044000 Stone
   E. Add section 047500 Cast Stone Masonry
   F. Add section 085200 Aluminum Windows

2. At Section 001550 – Construction and Safety Sign use new Project Sign drawing and delete drawing on Page 12.

3. Delete in its entirety Paragraph 011000.1.6

4. At Section 011000.1.8.A.1 delete 'Substantial Completion' and replace with 'Beneficial Occupancy' and add 'Refer to Special Contract Requirement E.2'.

5. At Paragraph 011000.1.3.F (Page 15), delete "upon completion." and replace with "upon completion. Owner reserves the right to seek Gold Certification with full cooperation and support of Contractor at no additional cost to the project "

6. At Paragraph 011000.1.5.A.1 (Page 18), delete "520 days" and replace with "365 days".

7. At Paragraph 011000.1.6.A (Page 19) delete "Substantial Completion" and replace with "Beneficial Occupancy".

8. Revise Paragraph 011000.1.8.A.1 (Page 19) to read: Architect will prepare a Certificate of Substantial Completion upon which time the Owner deems the project substantially complete. See paragraph 1.8.A above, for Beneficial Occupancy.

9. Revise Paragraph 011000.1.8.A.2 (Page 19) to read: Obtain a Temporary Certificate of Occupancy from authorities having jurisdiction as required for Beneficial Occupancy. Obtain a Certificate of Occupancy from authorities having jurisdiction before Substantial Completion.

10. Add Paragraph 011000.1.17.A (Page 22) to read:
    A. Sheeting and Shoring: Coordinate as follows:
       1. Based on Contractor-determined sequence of construction, mobilization, staging areas, etc., as well as geotechnical report and owner requirements, design Sheeting and Shoring.

2. Contractor shall submit six (6) copies of the Sheeting and Shoring shop drawings (stamped and signed by a Structural Engineer licensed in Washington, DC) to Architect for A/E/Owner review and comment. Revise as required according to review comments. Resubmit as required until shop drawings are approved.
3. Upon receipt of approved shop drawings, Contractor shall apply for and obtain all necessary permits associated with Sheeting and Shoring including street closings, traffic control, etc.
4. Contractor shall engage independent 3rd party inspector during Sheeting and Shoring construction.
5. In the event unforeseen conditions exist such as the occurrence of unexpected rock formations that interfere with the Sheeting and Shoring process, notify the Architect immediately. Do not proceed until the issue at hand has been addressed.
6. For bidding purpose the magnitude of the work required is represented by the following sheets. These sheets are provided for reference only. These sheets represent a Sheeting and Shoring design for all perimeter walls. The Contractor shall submit a design as outlined above which may vary depending on the Contractor. Examples of different designs include the incorporation of the sand filter and whether or not the Contractor desires all of the piles to be driven at one time while the lagging varies with the prioritization of each wall in order to provide expedited staging. The referenced drawings are as follows:
   A. Sheeting and Shoring Plan Drawing – Drawing 1 of 2
   B. Sheeting and Shoring Sections, Details and Design – Drawing 2 of 2

11. At Paragraph 017320.7.C.1.a (Page 25) delete 'Owner will remove hazardous materials under a separate contract'.

12. At Paragraph 017419.2.3.A (Page 50) delete 'company do provide this service:' and replace with 'provide intermediary or secondary processing:' and add '2. Green Recycling Network (703-850-9549) or approved equal)

13. At Paragraph 018113.1.5.B.12.c (Page 71) delete 'every third month' and replace with 'every month'.

14. At Paragraph 018113.1.5.C.1 (Page 75) delete 'Not more than 60 days' and replace with 'Not more than 30 days'.

15. At Paragraph 018113.1.5.C.2 (Page 75) delete 'Substantial Completion' and replace with 'Beneficial Occupancy'.

16. At Paragraph 018113.1.5.E.3 (Page 76) delete 'Substantial Completion' and replace with 'Beneficial Occupancy'.

17. At Paragraph 018113.2.1.P (Page 81) add 'Submit a justification to COTR for approval to use non-Regional Materials that details all efforts to locate such.'

18. At Paragraph 018150.1.5.A (Page 94) delete "to the CxA for inclusion in" and replace with "as part of".

19. At Paragraph 019100.1.5.A (Page 102) delete "provided as part of the bid documents".

20. At Paragraph 019100.1.6.C.1 (Page 103) add sub-paragraph "j" to read: Within 30 days of award of contract, Contractor shall develop and submit six (6) copies of the Commissioning Plan to the Architect for review and comment. The Commissioning Plan shall be in accordance with these specifications and other requirements by USGBC for the LEED certification. Revise as required according to review comments. Resubmit as required until Commissioning Plan is approved. Once approved, Contractor to implement Commissioning Plan as direct in specifications.

21. At Paragraph 019100.1.6.E.1 (Page 105) add sub-paragraph "9" to read: Review and comment on submitted / resubmitted Commissioning Plan as required for approval.

22. At Paragraph 019100.1.9 (Page 109) the following systems are to be commissioned:

A. Variable Speed Drives
B. Air Cooled Condensing Units
C. Makeup Air Systems
D. Air Handling Units
E. Centrifugal Fans
F. Ductwork
G. Fire/Smoke Dampers
H. Automatic Temperature Controls – Including an intentional sequence of operation
I. Testing, Adjusting, and Balancing
J. Building / Space Pressurization
K. Security System
L. Domestic Water Heater
M. Power Distribution System
N. Lighting Control Systems
O. Transfer Switches
P. Switchboard
Q. Panelboards
R. Grounding
S. Fire Alarm and Interface Items
T. Building Insulation Installation
U. Building Roof Installation Methods
V. Doors & Windows Installation Methods
W. Water Infiltration / Shell Drainage Plain

23. Add section 034500 Architectural Precast Concrete.

24. Revise Paragraph 042000.3.10.A (Page 186) to read: Anchor masonry (including architectural precast concrete panels) to concrete and masonry backup with anchors to comply with the following requirements:

25. Add section 047500 Cast Stone Masonry.

26. Revise Paragraph 057000.2.9.M (Page 270) to read: Manual operated swing gates: Provide all necessary hardware as required for fully functioning and finished system including hasps for padlock.

27. Revise Paragraph 057000.2.11.C (Page 270) to read: At Shade and Canopy: Anodized aluminum. Architect to select color from Manufacturer's full range of colors and glosses.

28. Revise Paragraph 062023.2.3.A (Page 282) to read: Plastic Laminate: To be selected by Architect from Manufacturer's full range of colors and textures.

29. Revise Paragraph 064023.2.6.A (Page 291) to read: Cabinet Construction: Plastic Laminate.

30. Revise Paragraph 064023.2.6.B (Page 291) to read: Exposed Surfaces: Plastic Laminate to be selected by Architect from Manufacturer's full range of colors and textures.

31. Add section 085200 Aluminum Windows.

32. Add Paragraph 15440.2.4.D (Page 725) to read: Lavatory Faucet: Lavatories to have electric proximity faucet with touch free temperature control with Selectronic Technology. See drawings for additional information.

33. At Paragraph 16111.2.1.B (Page 889) revise the following:

A. Revise sub-paragraph 1 to read: Rigid steel: UL 6 for conduit and fittings. Obtain Owner's permission to use substitute materials.
B. Delete sub-paragraphs 2, 3, 4, 5, and 6.

34. At Paragraph 16111.2.1.C (Page 890) delete sub-paragraphs 2, 3, 4, 5, and 6.

35. At Paragraph 331213.3.5.C (Page 1064) add 'Inspect the full extent of the existing sewer and storm water piping that will be affected by the new construction; before beginning construction activities and after all final connections by video method. Document entire run of the existing sewer and storm water piping and the building's new site sewer/storm water connections after final connections are completed. The inspections shall be documented on DVD-ROM; and three (3) copies of each inspection are to be submitted to the COTR for review and approval'.

36. At Paragraph 333100.3.5.C (Page 1073) add 'Inspect the full extent of the existing sewer and storm water piping that will be affected by the new construction; before beginning construction activities and after all final connections by video method. Document entire run of the existing sewer and storm water piping and the building's new site sewer/storm water connections after final connections are completed. The inspections shall be documented on DVD-ROM; and three (3) copies of each inspection are to be submitted to the COTR for review and approval'.

- END -

Attachment D

B.5 PRICE BREAK DOWN FORM

The bidder must complete this breakdown of prices and submit it with its bid. In case of any discrepancy in the total bid price entered here and the lump sum price in B.4, Section-B.4 shall govern.

Breakdown into Divisions of lump sum price bid under CLIN 0001, Section-B.4

DIVISION NO. *	DESCRIPTION	TOTAL PRICE BREAKDOWN
Div. 01	General Requirements	.....
	Allowance No. 1 Payment to PEPCO	**$30,000.00**
	Furnish & Install Triton Barriers 5@ $_____ each	
Div. 02	Existing Conditions	.....
Div. 03	Concrete	.....
Div. 04	Masonry	.....
Div. 05	Metals	.....
Div. 06	Wood, Plastics, and Composites	.....
Div. 07	Thermal and Moisture Protection	.....
Div. 08	Openings	.....
Div. 09	Finishes	.....
Div. 10	Specialties	.....
Div. 11	Equipment	.....
Div. 12	Furnishings	.....
Div. 13	Special Construction	.....
Div. 14	Conveying Equipment	.....
	Allowance No. 2 – Payment for Elevator	**$40,000.00**
Div. 15	Mechanical	.....
Div. 16	Electrical & Communication	.....
	Allowance No. 3 Specification Section 16727	**$100,000.00**
	Allowance No. 4 IT & Telephony Equipment	**$50,000.00**
Div. 31	Earthwork	
Div. 32	Exterior Improvements	
Div. 33	Utilities	
Lump Sum	Lump Sum Bid Price (copy from CLIN # 0001, Section-B.4,	

Bid Price	Part-I of IFB)	…….....

* DIVISION means a discrete component of the work for which a separate price is requested. The "Total Price Breakdown" is the sum total of all components, and must equal the Lump Sum Bid Price.

Attachment E

GEORGIA AVENUE SENIOR WELLNESS CENTER

BUILDING DEDICATION

Government of the District of Columbia

Mayor Adrian M. Fenty

Jim Graham
Ward One Councilmember

Clarence Brown, PhD., Executive Director
DC Office on Aging

2010

Material: Cast Bronze
Finish: Oxidized Dark Bronze Smooth Background with Raised Satin Gold Lettering and Border
Mounting: Concealed Studs
Lettering Font Size: TBD

Size: 20" wide X 16" High
Border: Gold 1/4" Thick to Edge

**** Submit Shop Drawing for approval before Ordering**

Attachment F

Construction for Ward 1 Senior Wellness Center

SOLICITATION NO.: DCAM-2009-B-0017
Wednesday, April 1, 2009
10:30 am

SIGN-IN SHEET

NAME	COMPANY	TELEPHONE NO.	EMAIL ADDRESS
Rich West	EDC	240-286-5667	RWest@Envdes.com
Peter Davidson	EDC	202-904-5717	PDavidson@Envdes.com
Sarah Cummings	Dustin	301-948-4710	scumming@Dustinconstruction.com
MARK MEY	BUCH	301-369-3500	mmey@buchconstruction.com
DENNIS CARLISLE	BUCH	" "	dcarlisle@buchconstruction.com
Pritesh Shah	FEI Construction	202-529-2140	pritesh@fornoyent.com
Ellie Djavadkhani	Kanvas Enterprises Inc. SBE/CBE/LSDBE	202-361-1573	ellie@kanvasconstruction.com
Olushola Akinleye	General Contractor - Service	202 545-0127	info@gsidcworld.com
Kelly Chi	Turner	703 841 5263	kchi@tcco.com
Tom Hood	wmschlosser	301-773-1300	Thood@wmschlosser.com
GEORGE KNIGHT	EEC of DC	240.508.3259	george@eecinc.com
Austin Reynaud	Motir Services	202 207 7360	areynaud@motirservices.com
Bill Stepanick	Monarc Construction	703-641-8500	WSTEPANICK@MONARCCONSTRUCTION.com

Construction for Ward 1 Senior Wellness Center

SOLICITATION NO.: DCAM-2009-B-0017
Wednesday, April 1, 2009
10:30 am

NAME	COMPANY	TELEPHONE NO.	EMAIL ADDRESS
Tom Wahl	Hamel Builders	410.379.6700	twahl@hamelbuilders.com
Jeff Konkus	Hamel Builders	410.379.6700	jkonkus@hamelbuilders.com
DAVID FLETCHER	RAND CONSTRUCTION	703 553 5511	FLETCHER@RANDCC.COM
Glen Jenkins	Fol Construction	2/678.5788	GlenKwc@msn.com
STEVEN GOODRICH	CITY CONSTRUCTION	2/250/8480	CITYGORD@YAHOO.COM
ROBERT E. SMITH	ROBERT E SMITH CONST CO	571-233-1426	ROBERTE SMITH 08 @COMCAST.NET
David Young	DCUSA Technology	2/DCU-SA10	Davey@dcusaTechnology.com
Phil Mueller	SIGAL CONST	202-439.2083	pmueller@SIGAL.COM
Vijay Kasimsetty	CONSYS, INC.	(202) 545 1333	vijay@consys-inc.net
Frank Chiaramonte	Chiaramonte Const	202 538 7835	frank@cc-builder.com
Rusty TODD	Bognet Const	703 807 0007	Lknight@Bognetconstruction.com
VINCE ANDREWS	FORRESTER CONSTRUCTION	240-723-3722	VANDREWS@FORRESTERCONSTRUCTION.COM
KENNETH D. POSTELL	THE LEXX GROUP INC.	202.393.3085	KPOSTELL@THELEXXGROUP.COM

Construction for Ward 1 Senior Wellness Center

SOLICITATION NO.: DCAM-2009-B-0017

Wednesday, April 1, 2009

10:30 am

NAME	COMPANY	TELEPHONE NO.	EMAIL ADDRESS
Charlie Mead	Donohoe Const.	202-333-0880	CharlesM@donohoe.com
Sahar Abi Hassan	Dynamic Corporation	240-296-0040	sahassan@dynamiccorp.us
Jacob Abraham	ARJ Group Inc	202 544 0268	arjgroupinc@myway.com.
RAJ JACOB	"	"	"
Lam Nguyen	Forney Enterprises	202 529 2140	lam@forneyent.com
Ade Adeleken	Micon Constructions inc	202 636-3930	info@miconconstructions.com
Reggie Herndon	Capital Construction Group	202 526 3420	rherndon@ccg-wdc.com
Austin Reynaud	Motir Services	202.207 1366	areynaud@motir-services.com
Allam Al-Alami	DC Gov't / OPM	(202) 671-2208	allam.al-alami@dc.gov.
Hasan Nejad	DC Gov / OPM	442-85-67	Hassan.Nejad@dc.gov
SHERRY. QUEASKIE	DCP	(202) 724-4477	SHERRY. QUEASKIE@dc.gov
JAY DOLPHIN	OPM	(202) 671 0607	JAY.DOLPHIN@DC.GOV

(1)

PROSPECTIVE BIDDER'S LIST

#6

GOVERNMENT OF THE DISTRICT OF COLUMBIA
DEPARTMENT OF PUBLIC WORKS
2000 14TH STREET, N.W.

WASHINGTON, DC 20009

FROSPECTIVE BIDDER'S LIST
FOR CONSTRUCTION AND
SUPPLIES AND SERVICES

**** CONTRACT SUPPORT BRANCH ****

Plans # 1

INVITATION NO.	ADVERTISED DATE	NON-REFUNDABLE FEE REQUIRED	BIDS TO BE OPENED 2:00
DCAM-2009-B-0017	03/23/09	$529.00	4/23/09

ROJECT MANAGER: Sherry Quashie TELEPHONE NUMBER: 202-724-4755

IARKET: Open/ with 35% SBE

ROJECT TITLE: WARD 1 SENIOR WELLNESS CENTER

ADDENDUM NO.	DATE REC'D.	DATE MAILED	ADDENDUM NO.	DATE REC'D.	DATE MAILED

BIDDING MATERIALS OBTAINED BY THE FOLLOWING COMPANIES

Sigal Construction Corp. 2231 Crystal Drive Suite 200 Arlington, VA 22202 703 302-1588 ph Attn: Scott 703 302-1520 fax Smith DG 3/25	Forney Enterprises, Inc. 1818 New York Ave. Suite 201 Washington, D.C. 20002 202 529-2140 202 529-2377 DG 3/25/09	202-889-6550 fax 610-3151 ENVIRONMENTAL DESIGN AND CONSTRUCTION 1104 GOOD HOPE RD. SE WASHINGTON, DC 20020 3/25/09
202-545-0127 fax 202-545-0202 GENERAL CONSTRUCTION SERVICES 3613 Ga., Ave., N.W. Wash., DC 20010 3/26/09	Keystone Plus Construction 1600 K St. N.W. Suite 350 Washington, D.C. 20006 Attn: Astrid Gomez ph 202 857-7903 fax -7908 DG 3/26	W.M. Schlosser Co. Inc. 2400 51st Place Hyattsville, MD 20781 301 773-1300 ph 301 773-1806 fax DG 3/27
703-841-5200 fax 703-841-5209 TRUNER CONSTRUCTION CO. 901 MAIN ST., STE. 4900 DALLAS TEXAS 75202 3/27/09	AF Development LLC 1512 Goodhope Rd. S.E. Washington, D.C. 20020 ph 202 439-6360 fax 202 439-6360 DG 3/37	398-6000 fax 398-8595 CAPITOL TECH. SERVICES 3703 Benning Rd. N.E. Washington, D.C. 20019 3/30/09
202-832-7250 Fax 301-779-9337 Specialty Construction 1818 New York Ave., N.E. Ste. 229 3/30/09 Washington, D.C. 20002	Motir Services Inc. 4224 6th Street SE Washington, D.C. 20032 202 371-9393 ph DG 3/30 202 289-1611 fax	240-296-0040 fax 240-296-0045 DYANAMIC CORP. 5133 LAWRENCE PL. HYATTSVILLE, MD. 20781 Sahar Abi Hassan 4/1/09
Hamel Builders, Inc. JI 4/1/09 5710 Furnace Avenue, Suite H Elkridge, MD 21075 twahl@hamelbuilders.com 301-621-1106/410 379-6705fax	Consys Inc. JI 4/1 732 Kennedy St, NW Washington, DC 20011 202-545-1333/545-1339 fax vijay@consys-inc.net	636-3930 Micon Construction, Inc, 1818 New York Ave., N.E. Ste. 218 4/1/09 Washington, D.C. 20002
Buch Construction Inc. 10945 Johns Hopkins Rd. Laurel, MD 20723 ph 301 369-3500 DG 4/2 fax 301 369-3501	301-255-1782 FORRESTER CONSTRUCTION 12231 PARKLAWN DR. ROCKVILLE, MD. 20852 Shannon Buck 4/3/09	393-3085 fax 393-3089 THE LEXX GROUP, INC. 400 5th ST., N.W. Ste. 400 WASHINGTON, DC 20001 4/7/09

SECTION 034500 - ARCHITECTURAL PRECAST CONCRETE

PART 1 - GENERAL

1.1 RELATED DOCUMENTS

A. Drawings and general provisions of the Contract, including General and Supplementary Conditions and Division 01 Specification Sections, apply to this Section.

1.2 SUMMARY

A. This Section includes the following:

1. Architectural precast concrete cladding units. Provide units and mortar that is tested to be non-efflorescent.

B. Related Sections include the following:

1. Division 03 Section "Cast-in-Place Concrete" for installing connection anchors in concrete.
2. Division 04 Section "Cast Stone Masonry" for dry cast stone facings, trim, and accessories.
3. Division 04 Section "Unit Masonry" for thin brick setting materials and installation after precast concrete panel production.
4. Division 08 Section "Aluminum Windows" for windows set into architectural precast concrete units.

1.3 DEFINITION

A. Design Reference Sample: Sample of approved architectural precast concrete color, finish and texture, preapproved by Architect.

B. Architectural precast concrete: Architectural precast concrete building units intended to simulate natural cut stone – panels larger than cast stone units.

1.4 PERFORMANCE REQUIREMENTS

A. Structural Performance: Provide architectural precast concrete units and connections capable of withstanding the following design loads within limits and under conditions indicated:

1. Loads: As indicated.
2. Design framing system and connections to maintain clearances at openings, to allow for fabrication and construction tolerances, to accommodate live-load deflection, shrinkage and creep of primary building structure, and other building movements as follows:

a. Upward and downward movement of 1/2 inch.

3. Thermal Movements: Provide for in-plane thermal movements resulting from annual ambient temperature changes of 80 deg F.
4. Window Washing System: Design precast units to resist pull-out and horizontal shear forces transmitted from standard (medium) sized window washing equipment.

1.5 SUBMITTALS

A. Product Data: For each type of product indicated.

B. Design Mixtures: For each precast concrete mixture. Include compressive strength and water-absorption tests.

C. Shop Drawings: Detail fabrication and installation of architectural precast concrete units. Indicate locations, plans, elevations, dimensions, shapes, and cross sections of each unit. Indicate joints, reveals, and extent and location of each surface finish. Indicate details at building corners.

1. Indicate separate face and backup mixture locations and thicknesses.
2. Indicate welded connections by AWS standard symbols. Detail loose and cast-in hardware and connections.
3. Indicate locations, tolerances, and details of anchorage devices to be embedded in or attached to structure or other construction.
4. Indicate locations, extent, and treatment of dry joints if two-stage casting is proposed.
5. Include plans and elevations showing unit location and sequence of erection for special conditions.
6. Indicate location of each architectural precast concrete unit by same identification mark placed on panel.
7. Indicate relationship of architectural precast concrete units to adjacent materials.
8. Indicate locations and details of brick and cast stone units, including corner units and special shapes, and joint treatment.
9. Indicate locations and details of stone facings, anchors, and joint widths. Joint locations to be consistent with those shown on the drawings.
10. Design: Meet performance requirements and field conditions. Submit design calculations and Shop Drawings. Do not adversely affect the appearance, durability, or strength of units when detailing and maintain the design concept and intent.
11. Comprehensive engineering analysis signed and sealed by the qualified professional engineer responsible for its preparation who is licensed in Washington, DC. Show governing panel types, connections, and types of reinforcement, including special reinforcement. Indicate location, type, magnitude, and direction of loads imposed on the building structural frame from architectural precast concrete.

12. Shop drawings are to be stamped and signed by a structural engineer licensed in the District of Columbia. Utilize loads shown on the contract structural drawings.

13. All work is to be provided without access to the south side adjacent private property. This includes preparations, protection of work, protection of others, protection of property, and clean up.

D. Samples for Initial Selection: Provide samples from full range of limestone colors.

E. Samples for Verification: For each type of finish indicated on exposed surfaces of architectural precast concrete units, in sets of 3, illustrating full range of finish, color, and texture variations expected; approximately 12 by 12 by 2 inches (300 by 300 by 50 mm).

1. When other faces of precast concrete unit are exposed, include Samples illustrating workmanship, color, and texture of backup concrete as well as facing concrete.
2. Samples for each unit type required, showing full range of color and texture expected. Include Sample showing color and texture of joint treatment.

a. Grout Samples for Initial Selection: Color charts consisting of actual sections of grout showing manufacturer's full range of colors.
b. Grout Samples for Verification: Showing color and texture of joint treatment.

F. Welding certificates.

G. Qualification Data: For Installer and fabricator. Owner to engage testing agency.

H. Material Test Reports: For aggregates.

I. Material Certificates: For the following items, signed by manufacturers:

1. Cementitious materials.
2. Reinforcing materials and prestressing tendons.
3. Admixtures.
4. Bearing pads.
5. Structural-steel shapes and hollow structural sections.
6. Stone anchors.

J. Source quality-control test reports.

1.6 QUALITY ASSURANCE

A. Installer Qualifications: A precast concrete erector qualified and designated by PCI's Certificate of Compliance to erect Category A (Architectural Systems) for non-load-bearing members.

B. Fabricator Qualifications: A firm that assumes responsibility for engineering architectural precast concrete units to comply with performance requirements. This responsibility includes preparation of

Shop Drawings and comprehensive engineering analysis by a qualified professional engineer.

1. Participates in PCI's plant certification program and is designated a PCI-certified plant for Group A, Category A1 - Architectural Cladding and Load Bearing Units or participates in APA's "Plant Certification Program for Production of Architectural Precast Concrete Products" and is designated an APA-certified plant.

C. Design Standards: Comply with ACI 318 (ACI 318M) and design recommendations of PCI MNL 120, "PCI Design Handbook - Precast and Prestressed Concrete," applicable to types of architectural precast concrete units indicated.

D. Quality-Control Standard: For manufacturing procedures and testing requirements, quality-control recommendations, and dimensional tolerances for types of units required, comply with PCI MNL 117, "Manual for Quality Control for Plants and Production of Architectural Precast Concrete Products."

E. Welding: Qualify procedures and personnel according to AWS D1.1/D.1.1M, "Structural Welding Code - Steel"; and AWS D1.4, "Structural Welding Code - Reinforcing Steel."

F. Sample Panels: After sample approval and before fabricating architectural precast concrete units, produce a minimum of 2 sample panels approximately 16 sq. ft. in area for review by Architect. Incorporate full-scale details of architectural features, finishes, textures, and transitions in sample panels.

1. Locate panels so as not to interfere with on-going construction processes.
2. Damage part of an exposed-face surface for each finish, color, and texture, and demonstrate adequacy of repair techniques proposed for repair of surface blemishes.
3. After acceptance of repair technique, maintain one sample panel at manufacturer's plant and one at Project site in an undisturbed condition as a standard for judging the completed Work.
4. Demolish and remove sample panels when directed.

G. Range Samples: After sample panel approval and before fabricating architectural precast concrete units, produce a minimum of 3 sets of samples, approximately 16 sq. ft. in area, representing anticipated range of each color and texture on Project's units. Following range sample, maintain one set of samples at Project site and remaining sample sets at manufacturer's plant as color and texture approval reference.

H. Mockups: After sample panel and range sample approval but before production of architectural precast concrete units, construct full-sized mockups to verify selections made under sample submittals and to demonstrate aesthetic effects and set quality standards for materials and execution.

1. Build mockup as indicated on Drawings including framing, glass, sealants, and architectural precast concrete complete with anchors, connections, flashings, and joint fillers.
2. Approved mockups may become part of the completed Work if undamaged at time of Substantial Completion.
3. Approval of mockups does not constitute approval of deviations from the Contract Documents unless such deviations are specifically approved by Architect in writing.

I. Preinstallation Conference: Conduct conference at Project site to comply with requirements in Division 01 Section "Project Management and Coordination."

1.7 DELIVERY, STORAGE, AND HANDLING

A. Deliver architectural precast concrete units in such quantities and at such times to limit unloading units temporarily on the ground.

B. Support units during shipment on nonstaining shock-absorbing material.

C. Store units with adequate dunnage and bracing and protect units to prevent contact with soil, to prevent staining, and to prevent cracking, distortion, warping or other physical damage.

D. Place stored units so identification marks are clearly visible, and units can be inspected.

E. Handle and transport units in a position consistent with their shape and design in order to avoid excessive stresses which would cause cracking or damage.

F. Lift and support units only at designated points shown on Shop Drawings.

G. Protect units to protect from staining, chipping, or spalling of concrete.

H. Mark units with date of production in location not exposed to view when in final location in structure.

1.8 SEQUENCING

A. Furnish loose connection hardware and anchorage items to be embedded in or attached to other construction without delaying the Work. Provide locations, setting diagrams, templates, instructions, and directions, as required, for installation.

PART 2 - PRODUCTS

2.1 MOLD MATERIALS

A. Molds: Rigid, dimensionally stable, non-absorptive material, warp and buckle free, that will provide continuous and true precast concrete surfaces within fabrication tolerances indicated; nonreactive with concrete and suitable for producing required finishes.

1. Mold-Release Agent: Commercially produced liquid-release agent that will not bond with, stain or adversely affect precast concrete surfaces and will not impair subsequent surface or joint treatments of precast concrete.

B. Form Liners: Units of face design, texture, arrangement, and configuration to match Architect’s stone sample. Furnish with manufacturer's recommended liquid-release agent that will not bond with, stain, or adversely affect precast concrete surfaces and will not impair subsequent surface or joint treatments of precast concrete.

C. Surface Retarder: Chemical set retarder, capable of temporarily delaying final hardening of newly placed concrete mixture to depth of reveal specified.

2.2 REINFORCING MATERIALS

A. Reinforcing Bars: ASTM A 615/A 615M, Grade 60 (Grade 420), deformed.

B. Low-Alloy-Steel Reinforcing Bars: ASTM A 706/A 706M, deformed.

C. Galvanized Reinforcing Bars: ASTM A 615/A 615M, Grade 60 ASTM A 706/A 706M, deformed bars, ASTM A 767/A 767M, Class II zinc coated, hot-dip galvanized[, and chromate wash treated after fabrication and bending.

D. Epoxy-Coated Reinforcing Bars: ASTM A 615/A 615M, Grade 60 ASTM A 706/A 706M, deformed bars, ASTM A 775/A 775M] or ASTM A 934/A 934M epoxy coated.

E. Steel Bar Mats: ASTM A 184/A 184M, fabricated from ASTM A 615/A 615M, Grade 60 (Grade 420). ASTM A 706/A 706M, deformed bars, assembled with clips.

F. Plain-Steel Welded Wire Reinforcement: ASTM A 185, fabricated from galvanized steel wire into flat sheets.

G. Deformed-Steel Welded Wire Reinforcement: ASTM A 497/A 497M, flat sheet.

H. Epoxy-Coated-Steel Wire: ASTM A 884/A 884M, Class A coated, plain deformed, flat sheet, Type 1 bendable coating.

I. Supports: Suspend reinforcement from back of mold or use bolsters, chairs, spacers, and other devices for spacing, supporting, and

fastening reinforcing bars and welded wire reinforcement in place according to PCI MNL 117.

2.3 PRESTRESSING TENDONS

A. Prestressing Strand: ASTM A 416/A 416M, Grade 270 (Grade 1860), uncoated, 7-wire, low-relaxation strand.

1. Coat unbonded post-tensioning strand with corrosion inhibitor passing ASTM D 1743 and sheath with polypropylene tendon sheathing. Include anchorage devices and coupler assemblies.

2.4 CONCRETE MATERIALS

A. Portland Cement: ASTM C 150, Type I or Type III, gray, unless otherwise indicated.

1. For surfaces exposed to view in finished structure, mix gray with white cement, of same type, brand, and mill source.

B. Normal-Weight Aggregates: Except as modified by PCI MNL 117, ASTM C 33, with coarse aggregates complying with Class 5S. Stockpile fine and coarse aggregates for each type of exposed finish from a single source (pit or quarry) for Project.

1. Face-Mixture-Coarse Aggregates: Selected, hard, and durable; free of material that reacts with cement or causes staining; to match selected finish sample.

a. Gradation: To match approved sample.

C. Lightweight Aggregates: Except as modified by PCI MNL 117, ASTM C 330, with absorption less than 11 percent.

D. Coloring Admixture: ASTM C 979, synthetic or natural mineral-oxide pigments or colored water-reducing admixtures, temperature stable, and nonfading.

E. Water: Potable; free from deleterious material that may affect color stability, setting, or strength of concrete and complying with chemical limits of PCI MNL 117.

F. Air-Entraining Admixture: ASTM C 260, certified by manufacturer to be compatible with other required admixtures.

G. Chemical Admixtures: Certified by manufacturer to be compatible with other admixtures and to not contain calcium chloride, or more than 0.15 percent chloride ions or other salts by weight of admixture.

1. Water-Reducing Admixtures: ASTM C 494/C 494M, Type A.
2. Retarding Admixture: ASTM C 494/C 494M, Type B.
3. Water-Reducing and Retarding Admixture: ASTM C 494/C 494M, Type D.

4. Water-Reducing and Accelerating Admixture: ASTM C 494/C 494M, Type E.
5. High-Range, Water-Reducing Admixture: ASTM C 494/C 494M, Type F.
6. High-Range, Water-Reducing and Retarding Admixture: ASTM C 494/C 494M, Type G.
7. Plasticizing and Retarding Admixture: ASTM C 1017/C 1017 M.

2.5 STEEL CONNECTION MATERIALS

A. Carbon-Steel Shapes and Plates: ASTM A 36/A 36M.

B. Carbon-Steel-Headed Studs: ASTM A 108, AISI 1018 through AISI 1020, cold finished, AWS D1.1/D1.1M, Type A or B, with arc shields and with minimum mechanical properties of PCI MNL 117, Table 3.2.3.

C. Carbon-Steel Plate: ASTM A 283/A 283M.

D. Malleable Iron Castings: ASTM A 47/A 47M.

E. Carbon-Steel Castings: ASTM A 27/A 27M, Grade 60-30 (Grade 415-205).

F. High-Strength, Low-Alloy Structural Steel: ASTM A 572/A 572M.

G. Carbon-Steel Structural Tubing: ASTM A 500, Grade B.

H. Wrought Carbon-Steel Bars: ASTM A 675/A 675M, Grade 65 (Grade 450).

I. Deformed-Steel Wire or Bar Anchors: ASTM A 496 or ASTM A 706/A 706M.

J. Carbon-Steel Bolts and Studs: ASTM A 307, Grade A (ASTM F 568M, Property Class 4.6); carbon-steel, hex-head bolts and studs; carbon-steel nuts, ASTM A 563 (ASTM A 563M); and flat, unhardened steel washers, ASTM F 844.

K. High-Strength Bolts and Nuts: ASTM A 325 (ASTM A 325M), Type 1, heavy hex steel structural bolts; heavy hex carbon-steel nuts, ASTM A 563 (ASTM A 563M); and hardened carbon-steel washers, ASTM F 436 (ASTM F 436M).

L. Zinc-Coated Finish: For exterior steel items[, steel in exterior walls,] and items indicated for galvanizing, apply zinc coating by hot-dip process according to ASTM A 123/A 123M or ASTM A 153/A 153M.

1. All steel items are to be galvanized. Limit silicon content of steel to less than 0.03 percent or to between 0.15 and 0.25 percent or limit sum of silicon and 2.5 times phosphorous content to 0.09 percent.
2. Galvanizing Repair Paint: High-zinc-dust-content paint with dry film containing not less than 94 percent zinc dust by weight, and complying with DOD-P-21035A or SSPC-Paint 20.

M. Welding Electrodes: Comply with AWS standards.

2.6 BEARING PADS

A. Provide one of the following bearing pads for architectural precast concrete units as recommended by precast fabricator for application:

1. Elastomeric Pads: AASHTO M 251, plain, vulcanized, 100 percent polychloroprene (neoprene) elastomer, molded to size or cut from a molded sheet, Type A durometer hardness of 50 to 70, ASTM D 2240, minimum tensile strength 2250 psi (15.5 MPa), ASTM D 412.
2. Random-Oriented, Fiber-Reinforced Elastomeric Pads: Preformed, randomly oriented synthetic fibers set in elastomer. Type A durometer hardness of 70 to 90, ASTM D 2240; capable of supporting a compressive stress of 3000 psi (20.7 MPa) with no cracking, splitting, or delaminating in the internal portions of pad. Test one specimen for every 200 pads used in Project.
3. Cotton-Duck-Fabric-Reinforced Elastomeric Pads: Preformed, horizontally layered cotton-duck fabric bonded to an elastomer; Type A durometer hardness of 80 to 100, ASTM D 2240; complying with AASHTO's "AASHTO Load and Resistance Factor Design (LRFD) Bridge Design Specifications, Division II, Section 18.10.2, or with MIL-C-882E.
4. Frictionless Pads: Tetrafluoroethylene (Teflon), glass-fiber reinforced, bonded to stainless or mild-steel plate, of type required for in-service stress.
5. High-Density Plastic: Multimonomer, nonleaching, plastic strip.

2.7 ACCESSORIES

A. Reglets: Specified in Division 07 Section "Sheet Metal Flashing and Trim."

B. Reglets: Stainless steel, Type 302 or 304, felt or fiber filled, or with face opening of slots covered.

C. Precast Accessories: Provide clips, hangers, plastic or steel shims, and other accessories required to install architectural precast concrete units.

2.8 GROUT MATERIALS

A. Sand-Cement Grout: Portland cement, ASTM C 150, Type I, and clean, natural sand, ASTM C 144, or ASTM C 404. Mix at ratio of 1 part cement to 2-1/2 parts sand, by volume, with minimum water required for placement and hydration.

B. Nonmetallic, Nonshrink Grout: Premixed, nonmetallic, noncorrosive, nonstaining grout containing selected silica sands, portland cement, shrinkage-compensating agents, plasticizing and water-reducing agents, complying with ASTM C 1107, Grade A for drypack and Grades B and C for flowable grout and of consistency suitable for application within a 30-minute working time.

C. Epoxy-Resin Grout: Two-component, mineral-filled epoxy resin; ASTM C 881/C 881M, of type, grade, and class to suit requirements.

2.9 CONCRETE MIXTURES

A. Prepare design mixtures for each type of precast concrete required.

1. Limit use of fly ash and silica fume to 20 percent of portland cement by weight; limit metakaolin and silica fume to 10 percent of portland cement by weight.

B. Design mixtures may be prepared by a qualified independent testing agency or by qualified precast plant personnel at architectural precast concrete fabricator's option.

C. Limit water-soluble chloride ions to maximum percentage by weight of cement permitted by ACI 318 (ACI 318M) or PCI MNL 117 when tested according to ASTM C 1218/C 1218M.

D. Normal-Weight Concrete Mixtures: Proportion face and backup mixtures by either laboratory trial batch or field test data methods according to ACI 211.1, with materials to be used on Project, to provide normal-weight concrete with the following properties:

1. Compressive Strength (28 Days): 5000 psi (34.5 MPa) minimum.
2. Maximum Water-Cementitious Materials Ratio: 0.45.

E. Water Absorption: 6 percent by weight or 14 percent by volume, tested according to PCI MNL 117.

F. Add air-entraining admixture at manufacturer's prescribed rate to result in concrete at point of placement having an air content complying with PCI MNL 117.

G. When included in design mixtures, add other admixtures to concrete mixtures according to manufacturer's written instructions.

2.10 MOLD FABRICATION

A. Molds: Accurately construct molds, mortar tight, of sufficient strength to withstand pressures due to concrete-placement operations and temperature changes and for prestressing and detensioning operations. Coat contact surfaces of molds with release agent before reinforcement is placed. Avoid contamination of reinforcement and prestressing tendons by release agent.

1. Place form liners accurately to provide finished surface texture indicated. Provide solid backing and supports to maintain stability of liners during concrete placement. Coat form liner with form-release agent.

B. Maintain molds to provide completed architectural precast concrete units of shapes, lines, and dimensions indicated, within fabrication tolerances specified.

1. Form joints are not permitted on faces exposed to view in the finished work.
2. Edge and Corner Treatment: Uniformly chamfered.

2.11 FABRICATION

A. Fabricate all units utilizing the Wet-Cast method.

B. Cast-in Anchors, Inserts, Plates, Angles, and Other Anchorage Hardware: Fabricate anchorage hardware with sufficient anchorage and embedment to comply with design requirements. Accurately position for attachment of loose hardware, and secure in place during precasting operations. Locate anchorage hardware where it does not affect position of main reinforcement or concrete placement.

1. Weld-headed studs and deformed bar anchors used for anchorage according to AWS D1.1/D1.1M and AWS C5.4, "Recommended Practices for Stud Welding."

C. Furnish loose hardware items including steel plates, clip angles, seat angles, anchors, dowels, cramps, hangers, and other hardware shapes for securing architectural precast concrete units to supporting and adjacent construction.

D. Cast-in reglets, slots, holes, and other accessories in architectural precast concrete units as indicated on the Contract Drawings.

E. Cast-in openings larger than 10 inches (250 mm) in any dimension. Do not drill or cut openings or prestressing strand without submitting drawing showing intended drilled opening and proposed reinforcement, etc. stamped by Structural engineer licensed in Washington, DC. And written request to the Architect.

F. Reinforcement: Comply with recommendations in PCI MNL 117 for fabricating, placing, and supporting reinforcement.

1. Clean reinforcement of loose rust and mill scale, earth, and other materials that reduce or destroy the bond with concrete. When damage to epoxy-coated reinforcing exceeds limits specified in ASTM A 775/A 775M, repair with patching material compatible with coating material and epoxy coat bar ends after cutting.
2. Accurately position, support, and secure reinforcement against displacement during concrete-placement and consolidation operations. Completely conceal support devices to prevent exposure on finished surfaces.
3. Place reinforcement to maintain at least 3/4-inch (19-mm) minimum coverage. Arrange, space, and securely tie bars and bar supports to hold reinforcement in position while placing concrete. Direct wire tie ends away from finished, exposed concrete surfaces.
4. Place reinforcing steel and prestressing strand to maintain at least 3/4-inch (19-mm) minimum concrete cover. Increase cover requirements for reinforcing steel to 1-1/2 inches (38 mm) when units are exposed to corrosive environment or severe exposure conditions. Arrange, space, and securely tie bars and bar supports to hold reinforcement in position while placing

concrete. Direct wire tie ends away from finished, exposed concrete surfaces.

5. Install welded wire fabric in lengths as long as practicable. Lap adjoining pieces at least one full mesh spacing and wire tie laps, where required by design. Offset laps of adjoining widths to prevent continuous laps in either direction.

G. Reinforce architectural precast concrete units to resist handling, transportation, and erection stresses.

H. Prestress tendons for architectural precast concrete units by either pretensioning or post-tensioning methods. Comply with PCI MNL 117.

1. Delay detensioning or post-tensioning of precast, prestressed architectural concrete units until concrete has reached its indicated minimum design release compressive strength as established by test cylinders cured under same conditions as concrete.
2. Detension pretensioned tendons either by gradually releasing tensioning jacks or by heat- cutting tendons, using a sequence and pattern to prevent shock or unbalanced loading.
3. If concrete has been heat cured, detension while concrete is still warm and moist to avoid dimensional changes that may cause cracking or undesirable stresses.
4. Protect strand ends and anchorages with bituminous, zinc-rich, or epoxy paint to avoid corrosion and possible rust spots.

I. Comply with requirements in PCI MNL 117 and requirements in this Section for measuring, mixing, transporting, and placing concrete. After concrete batching, no additional water may be added.

J. Place face mixture to a minimum thickness after consolidation of the greater of 1 inch (25 mm) or 1.5 times the maximum aggregate size, but not less than the minimum reinforcing cover specified.

K. Place concrete in a continuous operation to prevent seams or planes of weakness from forming in precast concrete units.

1. Place backup concrete mixture to ensure bond with face-mixture concrete.

L. Thoroughly consolidate placed concrete. Use equipment and procedures complying with PCI MNL 117.

1. Place self-consolidating concrete without vibration according to PCI TR-6, "Interim Guidelines for the Use of Self-Consolidating Concrete in Precast/Prestressed Concrete Institute Member Plants."

M. Comply with PCI MNL 117 for hot- and cold-weather concrete placement.

N. Identify pickup points of architectural precast concrete units and orientation in structure with permanent markings, complying with markings indicated on Shop Drawings. Imprint or permanently mark casting date on each architectural precast concrete unit on a surface that will not show in finished structure.

O. Cure concrete, according to requirements in PCI MNL 117, by moisture retention without heat or by accelerated heat curing using low-pressure live steam or radiant heat and moisture. Cure units until compressive strength is high enough to ensure that stripping does not have an effect on performance or appearance of final product.

P. Discard and replace architectural precast concrete units that do not comply with requirements, including structural, manufacturing tolerance, and appearance, unless repairs meet requirements in PCI MNL 117 and Architect's approval.

2.12 FABRICATION TOLERANCES

A. Fabricate architectural precast concrete units straight and true to size and shape with exposed edges and corners precise and true so each finished panel complies with the following product tolerances:

1. Overall Height and Width of Units, Measured at the Face Exposed to View: As follows:

   a. 10 feet (3 m) or under, plus or minus 1/8 inch (3 mm).
   b. 10 to 20 feet (3 to 6 m), plus 1/8 inch (3 mm), minus 3/16 inch (5 mm).
   c. 20 to 40 feet (6 to 12 m), plus or minus 1/4 inch (6 mm).
   d. Each additional 10 feet (3 m), plus or minus 1/16 inch (1.5 mm).

2. Overall Height and Width of Units, Measured at the Face Not Exposed to View: As follows:

   a. 10 feet (3 m) or under, plus or minus 1/4 inch (6 mm).
   b. 10 to 20 feet (3 to 6 m), plus 1/4 inch (6 mm), minus 3/8 inch (10 mm).
   c. 20 to 40 feet (6 to 12 m), plus or minus 3/8 inch (10 mm).
   d. Each additional 10 feet (3 m), plus or minus 1/8 inch (3 mm).

3. Total Thickness or Flange Thickness: Plus 1/4 inch (6 mm), minus 1/8 inch (3 mm).
4. Rib Thickness: Plus or minus 1/8 inch (3 mm).
5. Rib to Edge of Flange: Plus or minus 1/8 inch (3 mm).
6. Distance between Ribs: Plus or minus 1/8 inch (3 mm).
7. Variation from Square or Designated Skew (Difference in Length of the Two Diagonal Measurements): Plus or minus 1/8 inch per 72 inches (3 mm per 1830 mm) or 1/2 inch (13 mm) total, whichever is greater.
8. Length and Width of Block-outs and Openings within One Unit: Plus or minus 1/4 inch (6 mm).
9. Location and Dimension of Block-outs Hidden from View and Used for HVAC and Utility Penetrations: Plus or minus 3/4 inch (19 mm).
10. Dimensions of Haunches: Plus or minus 1/4 inch (6 mm).
11. Haunch Bearing Surface Deviation from Specified Plane: Plus or minus 1/8 inch (3 mm).

12. Difference in Relative Position of Adjacent Haunch Bearing Surfaces from Specified Relative Position: Plus or minus 1/4 inch (6 mm).
13. Bowing: Plus or minus L/360, maximum 1 inch (25 mm).
14. Local Smoothness: 1/4 inch per 10 feet (6 mm per 3 m).
15. Warping: 1/16 inch per 12 inches (1.5 mm per 300 mm) of distance from nearest adjacent corner.
16. Tipping and Flushness of Plates: Plus or minus 1/4 inch (6 mm).
17. Dimensions of Architectural Features and Rustications: Plus or minus 1/8 inch (3 mm).

B. Position Tolerances: For cast-in items measured from datum line location, as indicated on Shop Drawings.

1. Weld Plates: Plus or minus 1 inch (25 mm).
2. Inserts: Plus or minus 1/2 inch (13 mm).
3. Handling Devices: Plus or minus 3 inches (75 mm).
4. Reinforcing Steel and Welded Wire Fabric: Plus or minus 1/4 inch (6 mm) where position has structural implications or affects concrete cover; otherwise, plus or minus 1/2 inch (13 mm).
5. Reinforcing Steel Extending out of Member: Plus or minus 1/2 inch (13 mm) of plan dimensions.
6. Tendons: Plus or minus 1/4 inch (6 mm), vertical; plus or minus 1 inch (25 mm), horizontal.
7. Location of Rustication Joints: Plus or minus 1/8 inch (3 mm).
8. Location of Opening within Panel: Plus or minus 1/4 inch (6 mm).
9. Location of Flashing Reglets: Plus or minus 1/4 inch (6 mm).
10. Location of Flashing Reglets at Edge of Panel: Plus or minus 1/8 inch (3 mm).
11. Reglets for Glazing Gaskets: Plus or minus 1/8 inch (3 mm).
12. Electrical Outlets, Hose Bibs: Plus or minus 1/2 inch (13 mm).
13. Location of Bearing Surface from End of Member: Plus or minus 1/4 inch (6 mm).
14. Allowable Rotation of Plate, Channel Inserts, and Electrical Boxes: 2-degree rotation or 1/4 inch (6 mm) maximum over the full dimension of unit.
15. Position of Sleeve: Plus or minus 1/2 inch (13 mm).
16. Location of Window Washer Track or Buttons: Plus or minus 1/8 inch (3 mm).

2.13 FINISHES

A. Panel faces shall be free of joint marks, grain, and other obvious defects. Corners, including false joints shall be uniform, straight, and sharp. Finish exposed-face surfaces of architectural precast concrete units to match approved design reference sample and as follows:

1. Design Reference Sample: Limestone sample provided for color and texture.
2. Honed Finish: Use continuous mechanical abrasion with fine grit, followed by filling and rubbing procedures.

B. Finish exposed top, bottom, and back surfaces of architectural precast concrete units to match face-surface finish.

C. Finish unexposed surfaces of architectural precast concrete units by float finish.

D. Color and texture of grout is to match the color and texture of the mortar used at the cast stone.

2.14 SOURCE QUALITY CONTROL

A. Owner will employ an independent testing agency to evaluate architectural precast concrete fabricator's quality-control and testing methods.

1. Allow Owner's testing agency access to material storage areas, concrete production equipment, concrete placement, and curing facilities. Cooperate with Owner's testing agency and provide samples of materials and concrete mixtures as may be requested for additional testing and evaluation.

B. Strength of precast concrete units will be considered deficient if units fail to comply with ACI 318 (ACI 318M) requirements for concrete strength.

C. Testing: If there is evidence that strength of precast concrete units may be deficient or may not comply with ACI 318 (ACI 318M) requirements, precaster will employ an independent testing agency to obtain, prepare, and test cores drilled from hardened concrete to determine compressive strength according to ASTM C 42/C 42M.

1. A minimum of three representative cores will be taken from units of suspect strength, from locations directed by Architect.
2. Cores will be tested in an air-dry condition.
3. Strength of concrete for each series of 3 cores will be considered satisfactory if average compressive strength is equal to at least 85 percent of 28-day design compressive strength and no single core is less than 75 percent of 28-day design compressive strength.
4. Test results will be made in writing on same day that tests are performed, with copies to Architect, Contractor, and precast concrete fabricator. Test reports will include the following:

a. Project identification name and number.
b. Date when tests were performed.
c. Name of precast concrete fabricator.
d. Name of concrete testing agency.
e. Identification letter, name, and type of precast concrete unit(s) represented by core tests; design compressive strength; type of break; compressive strength at breaks, corrected for length-diameter ratio; and direction of applied load to core in relation to horizontal plane of concrete as placed.

D. Patching: If core test results are satisfactory and precast concrete units comply with requirements, clean and dampen core holes and solidly fill with precast concrete mixture that has no coarse aggregate, and finish to match adjacent precast concrete surfaces.

PART 3 - EXECUTION

3.1 EXAMINATION

A. Examine supporting structural frame or foundation and conditions for compliance with requirements for installation tolerances, true and level bearing surfaces, and other conditions affecting performance.

B. Proceed with installation only after unsatisfactory conditions have been corrected.

C. Do not install precast concrete units until supporting cast-in-place building structural framing has attained minimum allowable design compressive strength or supporting steel or other structure is complete.

3.2 INSTALLATION

A. Install clips, hangers, bearing pads, and other accessories required for connecting architectural precast concrete units to supporting members and backup materials.

B. Erect architectural precast concrete level, plumb, and square within specified allowable tolerances. Provide temporary supports and bracing as required to maintain position, stability, and alignment as units are being permanently connected.

1. Install temporary steel or plastic spacing shims or bearing pads as precast concrete units are being erected. Tack weld steel shims to each other to prevent shims from separating.
2. Maintain horizontal and vertical joint alignment and uniform joint width as erection progresses.
3. Remove projecting lifting devices and grout fill voids within recessed lifting devices flush with surface of adjacent precast surfaces when recess is exposed.
4. Unless otherwise indicated, maintain uniform joint widths of 3/4 inch (19 mm).

C. Connect architectural precast concrete units in position by bolting, welding, grouting, or as otherwise indicated on Shop Drawings. Remove temporary shims, wedges, and spacers as soon as practical after connecting and grouting are completed.

1. Do not permit connections to disrupt continuity of roof flashing.

D. Welding: Comply with applicable AWS D1.1/D1.1M and AWS D1.4 for welding, welding electrodes, appearance, quality of welds, and methods used in correcting welding work.

1. Protect architectural precast concrete units and bearing pads from damage by field welding or cutting operations, and provide noncombustible shields as required.
2. Welds not specified shall be continuous fillet welds, using no less than the minimum fillet as specified by AWS.

3. Clean weld-affected metal surfaces with chipping hammer followed by brushing, and apply a minimum 4.0-mil- (0.1-mm-) thick coat of galvanized repair paint to galvanized surfaces according to ASTM A 780.
4. Clean weld-affected metal surfaces with chipping hammer followed by brushing, and reprime damaged painted surfaces.
5. Remove, reweld, or repair incomplete and defective welds.

E. At bolted connections, use lock washers, tack welding, or other approved means to prevent loosening of nuts after final adjustment.

1. Where slotted connections are used, verify bolt position and tightness. For sliding connections, properly secure bolt but allow bolt to move within connection slot. For friction connections, apply specified bolt torque and check 25 percent of bolts at random by calibrated torque wrench.

F. Grouting Connections: Grout connections where required or indicated. Retain grout in place until hard enough to support itself. Pack spaces with stiff grout material, tamping until voids are completely filled. Place grout to finish smooth, level, and plumb with adjacent concrete surfaces. Keep grouted joints damp for not less than 24 hours after initial set. Promptly remove grout material from exposed surfaces before it affects finishes or hardens.

3.3 ERECTION TOLERANCES

A. Erect architectural precast concrete units level, plumb, square, and true, without exceeding the following noncumulative erection tolerances:
1. Plan Location from Centerline of Steel: Plus or minus 1/2 inch (13 mm).
2. Top Elevation from Nominal Top Elevation: As follows:

   a. Exposed Individual Panel: Plus or minus 1/4 inch (6 mm).
   b. Non-Exposed Individual Panel: Plus or minus 1/2 inch (13 mm).
   c. Exposed Panel Relative to Adjacent Panel: 1/4 inch (6 mm).
   d. Non-Exposed Panel Relative to Adjacent Panel: 1/2 inch (13 mm).

3. Support Elevation from Nominal Support Elevation: As follows:

   a. Maximum Low: 1/2 inch (13 mm).
   b. Maximum High: 1/4 inch (6 mm).

4. Maximum Plumb Variation over the Lesser of Height of Structure or 100 Feet (30 m): 1 inch (25 mm).
5. Plumb in Any 10 Feet (3 m) of Element Height: 1/4 inch (6 mm).
6. Maximum Jog in Alignment of Matching Edges: 1/4 inch (6 mm).
7. Joint Width (Governs over Joint Taper): Plus or minus 1/4 inch (6 mm).
8. Maximum Joint Taper: 3/8 inch (10 mm).
9. Joint Taper in 10 Feet (3 m): 1/4 inch (6 mm).
10. Maximum Jog in Alignment of Matching Faces: 1/4 inch (6 mm).

11. Differential Bowing or Camber, as Erected, between Adjacent Members of Same Design: 1/4 inch (6 mm).
12. Opening Height between Spandrels: Plus or minus 1/4 inch (6 mm).

3.4 FIELD QUALITY CONTROL

A. Special Inspections: Owner will engage a qualified special inspector to perform the following special inspections and prepare reports:

1. Erection of precast concrete members.

B. Testing Agency: Owner will engage a qualified testing agency to perform tests and inspections and prepare test reports.

C. Field welds will be subject to visual inspections and nondestructive testing according to ASTM E 165 or ASTM E 709. High-strength bolted connections will be subject to inspections.

D. Testing agency will report test results promptly and in writing to Owner, Contractor and Architect.

E. Repair or remove and replace work where tests and inspections indicate that it does not comply with specified requirements.

F. Additional testing and inspecting, at Contractor's expense, will be performed to determine compliance of replaced or additional work with specified requirements.

3.5 REPAIRS

A. Repair architectural precast concrete units if permitted by Architect. The Architect reserves the right to reject repaired units that do not comply with requirements or, in his opinion, is not consistent with the design intent.

B. Mix patching materials and repair units so cured patches blend with color, texture, and uniformity of adjacent exposed surfaces and show no apparent line of demarcation between original and repaired work, when viewed in typical daylight illumination from a distance of 20 feet (6 m).

C. Prepare and repair damaged galvanized coatings with galvanizing repair paint according to ASTM A 780.

D. Wire brush, clean, and paint damaged prime-painted components with same type of shop primer.

E. Remove and replace damaged architectural precast concrete units when repairs do not comply with requirements.

3.6 CLEANING

A. Clean surfaces of precast concrete units exposed to view.

B. Clean mortar, plaster, fireproofing, weld slag, and other deleterious material from concrete surfaces and adjacent materials immediately.

C. Clean exposed surfaces of precast concrete units after erection and completion of joint treatment to remove weld marks, other markings, dirt, and stains.

1. Perform cleaning procedures, if necessary, according to precast concrete fabricator's recommendations. Clean soiled precast concrete surfaces with detergent and water, using stiff fiber brushes and sponges, and rinse with clean water. Protect other work from staining or damage due to cleaning operations.
2. Do not use cleaning materials or processes that could change the appearance of exposed concrete finishes or damage adjacent materials.
3. If efflorescence exist on units or mortar, clean with cleaner recommended by manufacturer. Continue cycle of cleaning until all efflorescence is removed.

END OF SECTION 034500

PAGE NOT USED

SECTION 047200 - CAST STONE MASONRY

PART 1 - GENERAL

1.1 RELATED DOCUMENTS

A. Drawings and general provisions of the Contract, including General and Supplementary Conditions and Division 01 Specification Sections, apply to this Section.

1.2 SUMMARY

A. This Section includes the following:

1. Cast stone trim.

    a. Window sills.
    b. Cornices
    c. Bands
    d. Coping.

2. Provide units and mortar that is tested to be non-efflorescent.

B. Related Sections include the following:

1. Division 03 Section "Precast Architectural Concrete."
2. Division 04 Section "Unit Masonry" for installing cast stone units in unit masonry.

1.3 DEFINITIONS

A. Cast Stone: Architectural precast concrete building units intended to simulate natural cut stone.

1.4 SUBMITTALS

A. Product Data: Include construction details, material descriptions, dimensions of individual components and profiles, and finishes for cast stone units.

B. Shop Drawings: Show fabrication and installation details for cast stone units. Include dimensions, joint design and function, details of reinforcement and anchorages if any, details of metal studs and accessories, and indication of finished faces.

1. Include building elevations showing layout of units and locations of joints and anchors. Joints to be consistent with those shown on the drawings including full width at windows.

2. Provide anchorage and reinforcement as required to accomplish the design intent that is shown on the drawings. All fastening to be concealed.

3. All work is to be provided without access to the south side adjacent private property. This includes protection of work, protection of others, protection of property and clean up.

4. Shop drawings are to be stamped and signed by a structural engineer licensed in the District of Columbia.

C. Samples for Initial Selection: For colored mortar.

1. Cast stone from manufacturer’s full range of limestone colors.

2. Colored mortar from manufacturer’s full range.

D. Samples for Verification:

1. For each color and texture of cast stone required, 10 inches (250 mm) square in size.
2. For colored mortar. Make Samples using same sand and mortar ingredients to be used on Project. Label Samples. Architect to review range of colors and textures. If range is not acceptable, provide additional samples.

E. Qualification Data: For manufacturer.

1. Include copies of material test reports for completed projects, indicating compliance of cast stone with ASTM C 1364.

F. Quality-Control Plan: Manufacturer's written quality-control plan that includes all elements of the Cast Stone Institute's "Quality Control Procedures Required for Plant Inspection."

1. Provide copies of documentation showing compliance with quality-control plan as requested by Architect.

G. Material Test Reports: For each mix required to produce cast stone, based on testing according to ASTM C 1364, including test for resistance to freezing and thawing.

1. Provide test reports based on testing within previous two years.

1.5 QUALITY ASSURANCE

A. Manufacturer Qualifications: A qualified manufacturer of cast stone units similar to those indicated for this Project, with sufficient production capacity to manufacture required units.

1. Manufacturer is a producing member of the Cast Stone Institute.

2. Manufacturer shall have sufficient plant facilities to produce the shapes, quantities and size of Cast Stone required in accordance with the project requirements.

3. Manufacturer shall submit a written list of projects similar in scope and at least three (3) years of age, along with owner, architect and contractor references.

B. Testing Agency Qualifications: Owner to engage an independent testing agency qualified according to ASTM E 329 for testing indicated, as documented according to ASTM E 548.

C. Source Limitations for Cast Stone: Obtain cast stone units through one source from a single manufacturer.

D. Source Limitations for Mortar Materials: Obtain mortar ingredients of a uniform quality, including color, from one manufacturer for each cementitious component and from one source or producer for each aggregate.

E. Standards: Comply with the requirements of the Cast Stone Institute® Technical Manual and the project specifications.

F. Mock-up: Provide full size unit(s) for use in construction of sample wall. The approved mock-up shall become the standard for appearance and workmanship for the project.

1.6 DELIVERY, STORAGE, AND HANDLING

A. Coordinate delivery of cast stone to minimize the need for on-site storage and to avoid delaying the Work.

B. Pack, handle, and ship cast stone units in suitable packs or pallets.

1. Lift with wide-belt slings; do not use wire rope or ropes that might cause staining. Move cast stone units, if required, using dollies with wood supports.
2. Store cast stone units on wood skids or pallets with nonstaining, waterproof covers. Arrange to distribute weight evenly and to prevent damage to units. Ventilate under covers to prevent condensation.

C. Store installation materials on elevated platforms, under cover, and in a dry location.

D. Store mortar aggregates where grading and other required characteristics can be maintained and contamination can be avoided.

1.7 PROJECT CONDITIONS

A. Cold-Weather Requirements: Do not use frozen materials or materials mixed or coated with ice or frost. Do not build on frozen substrates. Comply with cold-weather construction requirements contained in ACI 530.1/ASCE 6/TMS 602.

1. Cold-Weather Cleaning: Use liquid cleaning methods only when air temperature is 40 deg F (4 deg C) and above and will remain so until cast stone has dried, but not less than 7 days after completing cleaning.

B. Hot-Weather Requirements: Comply with hot-weather construction requirements contained in ACI 530.1/ASCE 6/TMS 602.

PART 2 - PRODUCTS

2.1 MANUFACTURERS

A. In other Part 2 articles where titles below introduce lists, the following requirements apply to product selection:

1. Available Products: Subject to compliance with requirements, products that may be incorporated into the Work include, but are not limited to, products specified.
2. Products: Subject to compliance with requirements, provide one of the products specified.
3. Available Manufacturers: Subject to compliance with requirements, manufacturers offering products that may be incorporated into the Work include, but are not limited to, manufacturers specified.
4. Manufacturers: Subject to compliance with requirements, provide products by one of the manufacturers specified.

2.2 CAST STONE MATERIALS

A. General: Comply with ASTM C 1364 and the following:

B. Portland Cement: ASTM C 150, Type I, containing not more than 0.60 percent total alkali when tested according to ASTM C 114.

C. Coarse Aggregates: Granite, quartz, or limestone complying with ASTM C 33; gradation as needed to produce required textures and colors as needed to produce required cast stone colors.

D. Fine Aggregates: Natural sand or crushed stone complying with ASTM C 33, gradation as needed to produce required textures and colors as needed to produce required cast stone colors.

E. Color Pigment: ASTM C 979, synthetic mineral-oxide pigments or colored water-reducing admixtures; color stable, free of carbon black, nonfading, and resistant to lime and other alkalis.

F. Admixtures: Do not use admixtures unless specified or approved in writing by Architect.

1. Do not use admixtures that contain more than 0.1 percent water-soluble chloride ions by mass of cementitious materials. Do not use admixtures containing calcium chloride.

2. Use only admixtures that are certified by manufacturer to be compatible with cement and other admixtures used.
3. Plasticizers
4. Waterproofing Admixture: ASTM C 494/C 494M

G. Reinforcement: Deformed steel bars complying with ASTM A 615/A 615M. Use galvanized or epoxy-coated reinforcement when covered with less than 1-1/2 inches (38 mm) of cast stone material.

1. Epoxy Coating: ASTM A 775/A 775M.
2. Galvanized Coating: ASTM A 767/A 767M.
3. Reinforce the units as required by the shop drawings and for safe handling and structural stress.
4. Minimum reinforcing shall be 0.25 per cent of the cross section area.
5. Cast stones greater than 24 inches in one direction shall be reinforced in that direction.
6. Welded wire fabric reinforcing shall not be used in dry cast products.

H. Embedded Anchors, Plates and Other Inserts: Fabricated from steel complying with ASTM A 36/A 36M, and hot-dip galvanized to comply with ASTM A 123/A 123M.

2.3 CAST STONE UNITS

A. Available Manufacturers:
1. Architectural Cast Stone, Inc.
2. Cast Stone Systems, Inc.
3. DuraStone.
4. Edwards Cast Stone Company.

B. Provide cast stone units complying with ASTM C 1364 using the vibrant dry tamp method.

1. Provide units that are resistant to freezing and thawing as determined by laboratory testing according to ASTM C 666, Procedure A, as modified by ASTM C 1364.

2. Provide units with plasticizers and waterproofing admixtures for durability and freeze-thaw test results of 0.23% weight loss after 300 cycles.

C. Fabricate units with sharp arris and details accurately reproduced with indicated texture on all exposed surfaces, unless otherwise indicated.

1. Slope exposed horizontal surfaces 1:12, unless otherwise indicated.
2. Provide raised fillets at backs of sills and at ends indicated to be built into jambs.
3. Provide drips on projecting elements, unless otherwise indicated.

D. Fabrication Tolerances:

1. Variation in Cross Section: Do not vary from indicated dimensions by more than 1/8 inch (3 mm).
2. Variation in Length: Do not vary from indicated dimensions by more than 1/360 of the length of unit or 1/8 inch (3 mm), whichever is greater, but in no case by more than 1/4 inch (6 mm).
3. Warp, Bow, and Twist: Not to exceed 1/360 of the length of unit or 1/8 inch (3 mm), whichever is greater.
4. Location of Grooves, False Joints, Holes, Anchorages, and Similar Features: Do not vary from indicated position by more than 1/8 inch (3 mm) on formed surfaces of units and 3/8 inch (10 mm) on unformed surfaces.

E. Cure units by one of the following methods:

1. Cure units with steam in enclosed curing room at temperature of 105 deg F (41 deg C) or above and 95 to 100 percent relative humidity for 12 hours.
2. Additional yard curing at 95 percent relative humidity shall be 350 degree-days:

   a. Not less than 5 days at mean daily temperature of 70 deg F (21 deg C) or above.
   b. Not less than 6 days at mean daily temperature of 60 deg F (16 deg C) or above.
   c. Not less than 7 days at mean daily temperature of 50 deg F (10 deg C) or above.
   d. Not less than 8 days at mean daily temperature of 45 deg F (7 deg C) or above.
3. Form cured units shall be protected from moisture evaporation with curing blankets or curing compounds after casting:

F. Acid etch units after curing to remove cement film from surfaces to be exposed to view.

G. Colors and Textures: Match Architect's samples.

2.4 MORTAR MATERIALS

A. Provide mortar materials that comply with Division 04 Section "Unit Masonry."

B. Portland Cement: ASTM C 150, Type I or II, except Type III may be used for cold-weather construction. Provide natural color or white cement as required to produce mortar color indicated.

C. Hydrated Lime: ASTM C 207, Type S.

D. Portland Cement-Lime Mix: Packaged blend of portland cement complying with ASTM C 150, Type I or Type III, and hydrated lime complying with ASTM C 207, Type S.

E. Masonry Cement: ASTM C 91.

1. Available Products:

a. Capital Materials Corporation; Flamingo Color Masonry Cement.
b. Essroc, Italcementi Group; **B**rixment or [Velvet].
c. Lafarge North America Inc.; Magnolia Masonry Cement
d. Lehigh Cement Company; Lehigh Masonry Cement

F. Mortar Cement: ASTM C 1329.

1. Available Products:

a. Lafarge North America Inc.; Lafarge Mortar Cement

G. Mortar Pigments: Natural and synthetic iron oxides and chromium oxides, compounded for use in mortar mixes. Use only pigments with a record of satisfactory performance in masonry mortar.

1. Available Products:

a. Bayer Corporation, Industrial Chemicals Div.; Bayferrox Iron Oxide Pigments.
b. Davis Colors; True Tone Mortar Colors.
c. Solomon Grind-Chem Services, Inc.; SGS Mortar Colors.

H. Colored Cement Product: Packaged blend made from portland cement and lime and mortar pigments, all complying with specified requirements and containing no other ingredients.

1. Formulate blend as required to produce color indicated or, if not indicated, as selected from manufacturer's standard colors.
2. Pigments shall not exceed 10 percent of portland cement by weight.
3. Available Products:

a. Colored Portland Cement-Lime Mix:

1) Capital Materials Corporation; Riverton Portland Cement Lime Custom Color.
2) Holcim (US) Inc.; Rainbow Mortamix Custom Color Cement/Lime.
3) Lafarge North America Inc.; Eaglebond.
4) Lehigh Cement Company; Lehigh Custom Color Portland/Lime Cement.

I. Aggregate for Mortar: ASTM C 144.

1. For mortar that is exposed to view, use washed aggregate consisting of natural sand or crushed stone.
2. For joints less than 1/4 inch (6 mm) thick, use aggregate graded with 100 percent passing the No. 16 (1.18-mm) sieve.
3. White-Mortar Aggregates: Natural white sand or crushed white stone.
4. Colored-Mortar Aggregates: Natural sand or crushed stone of color necessary to produce required mortar color.

J. Water: Potable.

2.5 ACCESSORIES

A. Anchors: Type and size required to accommodate design intent, fabricated from steel complying with ASTM A 36/A 36M, and hot-dip galvanized to comply with ASTM A 123/A 123M.

B. Dowels: Round steel bars complying with ASTM A 36/A 36M or ASTM A 615/A 615M, 1/2-inch (12-mm) diameter, and hot-dip galvanized to comply with ASTM A 123/A 123M.

C. Proprietary Acidic Cleaner: Manufacturer's standard-strength, general-purpose cleaner designed for removing mortar/grout stains, efflorescence, and other construction stains from new masonry surfaces without discoloring or damaging masonry surfaces; expressly approved for intended use by cast stone manufacturer and expressly approved by cleaner manufacturer for use on cast stone and adjacent masonry materials.

1. Available Manufacturers:

a. Diedrich Technologies, Inc.
b. EaCo Chem, Inc.
c. ProSoCo, Inc.

2.6 MORTAR MIXES

A. Comply with requirements in Division 04 Section "Unit Masonry" for mortar mixes.

B. Do not use calcium chloride in mortar.
1. Limit cementitious materials in mortar to portland cement, and lime.

C. Comply with ASTM C 270, Proportion Specification.

1. For setting mortar, use Type N.

2. For pointing mortar, use Type N.

D. Pigmented Mortar: Use colored cement product or select and proportion pigments with other ingredients to produce color required. Do not add pigments to colored cement products.

1. Pigments shall not exceed 10 percent of portland cement by weight.
2. Mix to match approved sample.

E. Colored-Aggregate Mortar: Produce required mortar color by using colored aggregates and natural color or white cement as necessary to produce required mortar color.

1. Mix to match approved sample.

2.7 SOURCE QUALITY CONTROL

A. Employ an independent testing agency to sample and test cast stone units according to ASTM C 1364.

1. Include one test for resistance to freezing and thawing.

PART 3 - EXECUTION

3.1 EXAMINATION

A. Examine substrates and conditions, with Installer present, for compliance with requirements for installation tolerances and other conditions affecting performance of cast stone.

1. Proceed with installation only after unsatisfactory conditions have been corrected.

3.2 SETTING CAST STONE IN MORTAR

A. Install cast stone units to comply with requirements in Division 04 Section "Unit Masonry." Provide cast stone in mortar unless shop drawings indicate the need for sealant-filled joints.

B. Set cast stone as indicated on Drawings. Cast stones are to be in lengths indicated by joints shown on Elevation Drawings and Window Drawings. Set units accurately in locations indicated with edges and faces aligned according to established relationships and indicated tolerances.

1. Install anchors, supports, fasteners, and other attachments indicated or necessary to secure units in place.

C. Wet joint surfaces thoroughly before applying mortar or setting in mortar.

D. Set units in full bed of mortar with full head joints, unless otherwise indicated.

1. If not indicated, set units with joints 3/8 inch wide.
2. Build anchors and ties into mortar joints as units are set.
3. Fill dowel holes and anchor slots with mortar.
4. Fill collar joints solid as units are set.
5. Build concealed flashing into mortar joints as units are set.
6. Keep head joints in coping and other units with exposed horizontal surfaces open to receive sealant.

E. Rake out joints for pointing with mortar to depths of not less than 3/4 inch (19 mm). Rake joints to uniform depths with square bottoms and clean sides. Scrub faces of units to remove excess mortar as joints are raked.

F. Point mortar joints by placing and compacting mortar in layers not greater than 3/8 inch (10 mm). Compact each layer thoroughly and allow it to become thumbprint hard before applying next layer.

G. Tool exposed joints slightly concave when thumbprint hard, using a jointer larger than joint thickness, unless otherwise indicated.

H. Provide expansion, control, and pressure-relieving joints of widths and at locations indicated. Keep joints free of mortar and other rigid materials.

1. Form open joint of width indicated, but not less than 3/8 inch .

I. Prepare joints indicated on shop drawings to receive sealant and apply two component, polyurethane sealants.

1. Prime cast stone surfaces to receive sealant and install compressible backer rod in joints before applying sealant, unless otherwise indicated.

3.3 SETTING ANCHORED CAST STONE WITH SEALANT-FILLED JOINTS

A. Provide cast stone in mortar unless shop drawings indicate the need for sealant-filled joints.

B. Set cast stone as indicated on Drawings. Cast stones are to be in lengths indicated by joints shown on Elevation Drawings and Window Drawings. Set units accurately in locations indicated with edges and faces aligned according to established relationships and indicated tolerances.

1. Install anchors, supports, fasteners, and other attachments indicated or necessary to secure units in place.
2. Shim and adjust anchors, supports, and accessories to set cast stone in locations indicated with uniform joints.

C. Keep cavities open where unfilled space is indicated between back of cast stone units and backup wall; do not fill cavities with mortar or grout.

D. Fill anchor holes with sealant.

1. Where dowel holes occur at pressure-relieving joints, provide compressible material at ends of dowels.

E. Set cast stone supported on clip or continuous angles on resilient setting shims. Use material of thickness required to maintain uniform joint widths. Hold shims back from face of cast stone a distance at least equal to width of joint.

F. Keep joints free of mortar and other rigid materials. Remove temporary shims and spacers from joints after anchors and supports are secured in place and cast stone units are anchored. Do not begin sealant installation until temporary shims and spacers are removed.

1. Form open joint of 3/8 inch width.

3.4 INSTALLATION TOLERANCES

A. Variation from Plumb: Do not exceed 1/8 inch in 10 feet (3 mm in 3 m), 1/4 inch in 20 feet (6 mm in 6 m), or 1/2 inch (12 mm) maximum.

B. Variation from Level: Do not exceed 1/8 inch in 10 feet (3 mm in 3 m), 1/4 inch in 20 feet (6 mm in 6 m), or 1/2 inch (12 mm) maximum.

C. Variation in Joint Width: Do not vary joint thickness more than 1/8 inch in 36 inches (3 mm in 900 mm) or one-fourth of nominal joint width, whichever is less.

D. Variation in Plane between Adjacent Surfaces (Lipping): Do not vary from flush alignment with adjacent units or adjacent surfaces indicated to be flush with units by more than 1/16 inch (1.5 mm), except due to warpage of units within tolerances specified.

3.5 ADJUSTING AND CLEANING

A. Remove and replace stained and otherwise damaged units and units not matching approved Samples. Cast stone may be repaired if methods and results are approved by Architect.

B. Replace units in a manner that results in cast stone matching approved Samples, complying with other requirements, and showing no evidence of replacement.

C. In-Progress Cleaning: Clean cast stone as work progresses.

1. Remove mortar fins and smears before tooling joints.
2. Remove excess sealant, including spills, smears, and spatter.

D. Final Cleaning: After mortar is thoroughly set and cured, clean exposed cast stone as follows:

1. Remove large mortar particles by hand with wooden paddles and nonmetallic scrape hoes or chisels.
2. Test cleaning methods on sample; leave one sample uncleaned for comparison purposes. Obtain Architect's approval of sample cleaning before proceeding with cleaning of cast stone.
3. Protect adjacent surfaces from contact with cleaner by covering them with liquid strippable masking agent or polyethylene film and waterproof masking tape.
4. Wet surfaces with water before applying cleaners; remove cleaners promptly by rinsing thoroughly with clear water.
5. Clean cast stone by bucket-and-brush hand-cleaning method described in BIA Technical Notes No. 20.
6. Clean cast stone with proprietary acidic cleaner applied according to manufacturer's written instructions.

END OF SECTION 047200

PAGE NOT USED

SECTION 085200 - ALUMINUM WINDOWS

PART 1 - GENERAL

1.1 RELATED DOCUMENTS

A. Documents referred to in **Section C** of the BID DOCUMENTS are part hereof the same as if repeated herein.

1.2 SUMMARY

A. This Section includes the following types of aluminum-framed windows:

1. Single-hung windows.
2. Fixed windows.

B. Related Sections include the following:

1. Division 8 Section "Aluminum Entrances and Storefronts."
2. Division 8 Section "Glazing" for glazing requirements for aluminum windows, including those specified to be factory glazed.

1.3 DEFINITIONS

A. R: Residential.

B. Performance grade number, included as part of the AAMA/NWWDA product designation code, is actual design pressure in pounds force per square foot (pascals) used to determine structArchitectural test pressure and water test pressure.

C. StructArchitectural test pressure, for uniform load structArchitectural test, is equivalent to 150 percent of design pressure.

D. Minimum test size is smallest size permitted for performance class (gateway test size). Products must be tested at minimum test size or at a size larger than minimum test size to comply with requirements for performance class.

1.4 PERFORMANCE REQUIREMENTS

A. General: Provide aluminum windows capable of complying with performance requirements indicated, based on testing manufacturer's windows that are representative of those specified and that are of test size indicated below:

1. Minimum size required by AAMA/NWWDA 101/I.S.2.
2. Minimum size required by gateway performance requirements for determining compliance with AAMA/NWWDA 101/I.S.2 for both gateway performance requirements and optional performance grades.
3. Size indicated.

B. AAMA/NWWDA Performance Requirements: Provide aluminum windows of the performance class and grade indicated that comply with AAMA/NWWDA 101/I.S.2.

1. Performance Class: R.
2. Performance Grade: Minimum for performance class indicated.
3. Performance Grade: 20 .
4. Exception to AAMA/NWWDA 101/I.S.2: In addition to requirements for performance class and performance grade, design glass framing system to limit lateral deflections of glass edges to less than 1/175 of glass-edge length or 3/4 inch (19 mm), whichever is less, at design pressure based on the following:

    a. Testing performed according to AAMA/NWWDA 101/I.S.2, Uniform Load Deflection Test or structArchitectural computations.
    b. StructArchitectural computations.

C. Condensation-Resistance Factor: Provide aluminum windows tested for thermal performance according to AAMA 1503, showing a CRF of 45 , where windows are indicated to be "thermally improved."

D. Thermal Transmittance: Provide aluminum windows with a whole-window U-value maximum indicated at 15-mph (24-km/h) exterior wind velocity and winter condition temperatures when tested according to AAMA 1503 .

1. U-Value: 50 Btu/sq. ft. x h x deg F (W/sq. m x K).

E. Solar Heat-Gain Coefficient: Provide aluminum windows with a whole-window SHGC maximum of 75, determined according to NFRC 200 procedures.

F. Sound Transmission Class: Provide glazed windows rated for not less than 26 STC when tested for laboratory sound transmission loss according to ASTM E 90 and determined by ASTM E 413.

G. Thermal Movements: Provide aluminum windows, including anchorage, that accommodate thermal movements of units resulting from the following maximum change (range) in ambient and surface temperatures without buckling, distortion, opening of joints, failure of joint sealants, damaging loads and stresses on glazing and connections, and other detrimental effects. Base COTR ing calculation on actual surface temperatures of materials due to solar heat gain and nighttime-sky heat loss.

1. Temperature Change (Range): 120 deg F (67 deg C), ambient; 180 deg F (100 deg C) material surfaces.

1.5 SUBMITTALS

A. Product Data: Include construction details, material descriptions, fabrication methods, dimensions of individual components and profiles, hardware, finishes, and operating instructions for each type of aluminum window indicated.

B. Shop Drawings: Include plans, elevations, sections, details, hardware, attachments to other Work, operational clearances, and the following:

1. Mullion details, including reinforcement and stiffeners.
2. Joinery details.
3. Expansion provisions.
4. Flashing and drainage details.
5. Weather-stripping details.

6. Thermal-break details.
7. Glazing details.
8. For installed products indicated to comply with design loads, include structArchitectural analysis data signed and sealed by the qualified professional COTR responsible for their preparation and used to determine the following:

    a. Deflection limitations of glass framing systems.

C. Samples for Initial Selection: For units with factory-applied color finishes.

D. Samples for Verification: For aluminum window components required, prepared on Samples of size indicated below.

1. Main Framing Member: 12-inch- (300-mm-) long, full-size sections of extrusions with factory-applied color finish.
2. Hardware: Full-size units with factory-applied finish.
3. Weather Stripping: 12-inch- (300-mm-) long sections.

5. COTR reserves the right to require additional samples that show fabrication techniques, workmanship, and design of hardware and accessories.

E. Qualification Data: For Installer .

F. Field Quality-Control Test Reports: From a qualified testing and inspecting agency engaged by Contractor.

G. Product Test Reports: Based on evaluation of comprehensive tests performed within the last four years by a qualified testing agency, for each type, grade, and size of aluminum window. Test results based on use of down-sized test units will not be accepted.

H. Maintenance Data: For operable window sash and finishes to include in maintenance manuals.

1.6 QUALITY ASSURANCE

A. Installer Qualifications: An installer acceptable to aluminum window manufacturer for installation of units required for this Project.

B. Testing Agency Qualifications: An independent testing agency, acceptable to authorities having jurisdiction, with the experience and capability to conduct the testing indicated, as documented according to ASTM E 548.

C. Source Limitations: Obtain aluminum windows through one source from a single manufacturer.

D. Product Options: Information on Drawings and in Specifications establishes requirements for aluminum windows' aesthetic effects and performance characteristics. Aesthetic effects are indicated by dimensions, arrangements, alignment, and profiles of components and assemblies as they relate to sightlines, to one another, and to adjoining construction. Performance characteristics are indicated by criteria subject to verification by one or more methods including preconstruction testing, field testing, and in-service performance.

E. Product Options: Drawings indicate size, profiles, and dimensional requirements of aluminum windows and are based on the specific system indicated. Refer to Division 1 Section "Product Requirements."

1. Do not modify intended aesthetic effects, as judged solely by COTR , except with COTR 's approval. If modifications are proposed, submit comprehensive explanatory data to COTR for review.

F. Fenestration Standard: Comply with AAMA/NWWDA 101/I.S.2, "Voluntary Specifications for Aluminum, Vinyl (PVC) and Wood Windows and Glass Doors," for minimum standards of performance, materials, components, accessories, and fabrication unless more stringent requirements are indicated.

1. Provide AAMA -certified aluminum windows with an attached label.

G. Glazing Publications: Comply with published recommendations of glass manufacturers and GANA's "Glazing Manual" unless more stringent requirements are indicated.

1.7 PROJECT CONDITIONS

A. Field Measurements: Verify aluminum window openings by field measurements before fabrication and indicate measurements on Shop Drawings.

1. Established Dimensions: Where field measurements cannot be made without delaying the Work, establish opening dimensions and proceed with fabricating aluminum windows without field measurements. Coordinate wall construction to ensure that actual opening dimensions correspond to established dimensions.

1.8 WARRANTY

A. Special Warranty: Manufacturer's standard form in which manufacturer agrees to repair or replace aluminum windows that fail in materials or workmanship within specified warranty period. Failures include, but are not limited to, the following:

1. Failure to meet performance requirements.
2. StructArchitectural failures including excessive deflection.
3. Water leakage, air infiltration, or condensation.
4. Faulty operation of movable sash and hardware.
5. Deterioration of metals, metal finishes, and other materials beyond normal weathering.
6. Insulting glass failure.

B. Warranty Period: Two years from date of Substantial Completion.

C. Warranty Period for Metal Finishes: Five years from date of Substantial Completion.

D. Warranty Period for Glass: Five years from date of Substantial Completion.

PART 2 - PRODUCTS

2.1 MANUFACTURERS

A. Available Manufacturers: Subject to compliance with requirements, manufacturers offering products that may be incorporated into the Work include, but are not limited to, the following:

1. Acorn Window Systems.
2. EFCO Corporation.
3. Graham Architectural Products Corp.
4. TRACO.

2.2 MATERIALS, GENERAL

A. Aluminum Extrusions: Alloy and temper recommended by aluminum window manufacturer for strength, corrosion resistance, and application of required finish, but not less than 22,000-psi (150-MPa) ultimate tensile strength, not less than 16,000-psi (110-MPa) minimum yield strength, and not less than 0.062-inch (1.6-mm) thickness at any location for the main frame and sash members.

B. Fasteners: Aluminum, nonmagnetic stainless steel, epoxy adhesive, or other materials warranted by manufacturer to be noncorrosive and compatible with aluminum window members, trim, hardware, anchors, and other components. Cadmium-plated steel fasteners are not permitted.

1. Reinforcement: Where fasteners screw-anchor into aluminum less than 0.125 inch (3.2 mm) thick, reinforce interior with aluminum or nonmagnetic stainless steel to receive screw threads, or provide standard, noncorrosive, pressed-in, splined grommet nuts.
2. Exposed Fasteners: Unless unavoidable for applying hardware, do not use exposed fasteners. For application of hardware, use fasteners that match finish of member or hardware being fastened, as appropriate.

C. Anchors, Clips, and Accessories: Aluminum, nonmagnetic stainless steel, or zinc-coated steel or iron complying with ASTM B 633 for SC 3 severe service conditions; provide sufficient strength to withstand design pressure indicated. Cadmium-plated steel anchors, clips, and accessories are not permitted.

D. Reinforcing Members: Aluminum, nonmagnetic stainless steel, nickel/chrome-plated steel complying with ASTM B 456 for Type SC 3 severe service conditions, or zinc-coated steel or iron complying with ASTM B 633 for SC 3 severe service conditions; provide sufficient strength to withstand design pressure indicated. Cadmium-plated steel reinforcing members are not permitted.

E. Compression-Type Weather Stripping: Provide compressible weather stripping designed for permanently resilient sealing under bumper or wiper action, and completely concealed when aluminum window is closed.

1. Weather-Stripping Material: Elastomeric cellular preformed gaskets complying with ASTM C 509.
2. Weather-Stripping Material: Dense elastomeric gaskets complying with ASTM C 864.
3. Weather-Stripping Material: Manufacturer's standard system and materials complying with AAMA/NWWDA 101/I.S.2.

F. Sliding-Type Weather Stripping: Provide woven-pile weather stripping of wool, polypropylene, or nylon pile and resin-impregnated backing fabric. Comply with AAMA 701/702.

1. Weather Seals: Provide weather stripping with integral barrier fin or fins of semirigid, polypropylene sheet or polypropylene-coated material.

G. Replaceable Weather Seals: Comply with AAMA 701/702.

H. Sealant: For sealants required within fabricated windows, provide window manufacturer's standard, permanently elastic, nonshrinking, and nonmigrating type recommended by sealant manufacturer for joint size and movement.

2.3 GLAZING

A. Glass and Glazing Materials: Refer to Division 8 Section "Glazing" for glass units and glazing requirements applicable to glazed aluminum window units.

B. Glazing System: Manufacturer's standard factory-glazing system that produces weathertight seal.

2.4 HARDWARE

A. General: Provide manufacturer's standard hardware fabricated from aluminum, stainless steel, carbon steel complying with AAMA 907, or other corrosion-resistant material compatible with aluminum; designed to smoothly operate, tightly close, and securely lock aluminum windows and sized to accommodate sash or ventilator weight and dimensions. Cadmium-plated hardware is not permitted. Do not use aluminum in frictional contact with other metals. Where exposed, provide .

B. Counterbalancing Mechanism: Comply with AAMA 902.

2.5 FABRICATION

A. General: Fabricate aluminum windows, in sizes indicated, that comply with AAMA/NWWDA 101/I.S.2 for performance class and performance grade indicated. Include a complete system for assembling components and anchoring windows.

B. Fabricate aluminum windows that are reglazable without dismantling sash or ventilator framing.

C. Thermally Improved Construction: Fabricate aluminum windows with an integral, concealed, low-conductance thermal barrier; located between exterior materials and window members exposed on interior side; in a manner that eliminates direct metal-to-metal contact.

1. Provide thermal-break construction that has been in use for not less than three years and has been tested to demonstrate resistance to thermal conductance and condensation and to show adequate strength and security of glass retention.
2. Provide thermal barriers tested according to AAMA 505; determine the allowable design shear flow per the appendix in AAMA 505.
3. Provide hardware with low conductivity or nonmetallic material for hardware bridging thermal breaks at frame or vent sash.

D. Weather Stripping: Provide full-perimeter weather stripping for each operable sash and ventilator.

E. Weep Holes: Provide weep holes and internal passages to conduct infiltrating water to exterior.

F. Provide water-shed members above side-hinged ventilators and similar lines of natArchitectural water penetration.

G. Mullions: Provide mullions and cover plates as shown, matching window units, complete with anchors for support to structure and installation of window units. Allow for erection tolerances and provide for movement of window units due to thermal expansion and building deflections, as indicated. Provide mullions and cover plates capable of withstanding design loads of window units.

H. Subframes: Provide subframes with anchors for window units as shown, of profile and dimensions indicated but not less than 0.062-inch- (1.6-mm-) thick extruded aluminum. Miter or cope corners, and weld and dress smooth with concealed mechanical joint fasteners. Finish to match window units. Provide subframes capable of withstanding design loads of window units.

I. Factory-Glazed Fabrication: Glaze aluminum windows in the factory where practical and possible for applications indicated. Comply with requirements in Division 8 Section "Glazing" and with AAMA/NWWDA 101/I.S.2.

J. Glazing Stops: Provide snap-on glazing stops coordinated with Division 8 Section "Glazing" and glazing system indicated. Provide glazing stops to match sash and ventilator frames.

2.6 FINISHES

A. General: Comply with NAAMM's "Metal Finishes Manual for Architectural and Metal Products" for recommendations for applying and designating finishes.

B. Finish designations prefixed by AA comply with the system established by the Aluminum Association for designating aluminum finishes.

C. Class I, Color Anodic Finish: AA-M12C22A42/A44 (Mechanical Finish: nonspecular as fabricated; Chemical Finish: etched, medium matte; Anodic Coating: Architectural Class I, integrally colored or electrolytically deposited color coating 0.018 mm or thicker) complying with AAMA 611.

1. Color at all windows: As selected by Architect from manufacturer’s full range.

PART 3 - EXECUTION

3.1 EXAMINATION

A. Examine openings, substrates, structArchitectural support, anchorage, and conditions, with Installer present, for compliance with requirements for installation tolerances; rough opening dimensions; levelness of sill plate; coordination with wall flashings, vapor retarders, and other built-in components; operational clearances;and other conditions affecting performance of work.

1. Masonry Surfaces: Visibly dry and free of excess mortar, sand, and other construction debris.
2. Metal Surfaces: Dry; clean; free of grease, oil, dirt, rust, corrosion, and welding slag; without sharp edges or offsets at joints.

B. Proceed with installation only after unsatisfactory conditions have been corrected.

3.2 INSTALLATION

A. General: Comply with manufacturer's written instructions for installing windows, hardware, accessories, and other components; Drawings; and Shop Drawings.

B. Install windows level, plumb, square, true to line, without distortion or impeding thermal movement, anchored securely in place to structArchitectural support, and in proper relation to wall flashing and other adjacent construction.

C. Set sill members in bed of sealant or with gaskets, as indicated, for weathertight construction.

D. Install windows and components to drain condensation, water penetrating joints, and moisture migrating within windows to the exterior.

E. Metal Protection: Separate aluminum and other corrodible surfaces from sources of corrosion or electrolytic action at points of contact with other materials by complying with requirements specified in "Dissimilar Materials" Paragraph in Appendix B in AAMA/NWWDA 101/I.S.2.

3.3 FIELD QUALITY CONTROL

A. Testing Agency: Owner will engage a qualified independent testing and inspecting agency to perform field tests and inspections and to prepare test reports.

B. Testing Services: Testing and inspecting of installed windows shall take place as follows:

1. Testing Methodology: Testing of windows for air infiltration and water resistance shall be performed according to AAMA 502, Test Method A, by applying same test pressures required to determine compliance with AAMA/NWWDA 101/I.S.2 in Part 1 "Performance Requirements" Article.
2. Testing Extent: Three windows as selected by COTR and a qualified independent testing and inspecting agency. Windows shall be tested immediately after installation.
3. Test Reports: Shall be prepared according to AAMA 502.

C. Remove and replace windows where test results indicate that they do not comply with specified requirements.

D. Additional testing and inspecting, at Contractor's expense, will be performed to determine compliance of replaced or additional work with specified requirements.

3.4 ADJUSTING

A. Adjust operating sashes and ventilators, screens, hardware,and accessories for a tight fit at contact points and weather stripping for smooth operation and weathertight closure. Lubricate hardware and moving parts.

3.5 PROTECTION AND CLEANING

A. Protect window surfaces from contact with contaminating substances resulting from construction operations. In addition, monitor window surfaces adjacent to and below exterior concrete and masonry surfaces during construction for presence of dirt, scum, alkaline deposits, stains, or other contaminants. If contaminating substances do contact window surfaces, remove contaminants immediately according to manufacturer's written recommendations.

B. Clean aluminum surfaces immediately after installing windows. Avoid damaging protective coatings and finishes. Remove excess sealants, glazing materials, dirt, and other substances.

C. Clean factory-glazed glass immediately after installing windows. Comply with manufacturer's written recommendations for final cleaning and maintenance. Remove nonpermanent labels and clean surfaces.

D. Remove and replace glass that has been broken, chipped, cracked, abraded, or damaged during construction period.

END OF SECTION 08520

GEOTECHNICAL REPORT

SENIOR WELLNESS CENTER
3531-3537 GEORGIA AVENUE
NORTHWEST WASHINGTON, D.C.

Prepared for

Lance Bailey & Associates, Inc.
7961 Eastern Avenue, Suite 200
Silver Spring, Maryland

Attn: Mr. Ansar Burney

Prepared by

THOMAS L. BROWN ASSOCIATES, P.C.
Washington, D.C.

August 29, 2005

THOMAS L. BROWN ASSOCIATES, PC

1400 EYE STREET, NW, SUITE 440
WASHINGTON, D.C. 20005
D.C. (202) 387-0022
FAX # (202) 682-1367

Consulting Engineers

THOMAS L. BROWN, CWD, P.E., President

August 29, 2005

Lance Bailey & Associates, Inc.
7961 Eastern Avenue, Suite 200
Silver Spring, Maryland 20910

Attn: Mr. Ansar Burney
Project Architect

Re: Senior Wellness Center
3531-3537 Georgia Avenue, N.W.
Washington, DC.

Dear Mr. Burney:

Pursuant to your authorization, we have performed a geotechnical study in support of your design efforts on the referenced project. The following report summarizes the results of our subsurface explorations and laboratory testing and presents recommendations for the geotechnical aspects of the project.

If you have any questions regarding this report or when we can be of further assistance on this or other projects, please do not hesitate to call us.

Yours very truly,

THOMAS L. BROWN ASSOCIATES, P.C.

for Rolex Njuguna
Staff Engineer

Somba Ndeti, P.E.
Vice President

DISTRICT OF COLUMBIA
SOMBA NDETI
No. 10429
REGISTERED
PROFESSIONAL ENGINEER

Terry Knox
Project Engineer

SN:tk:nrw
TL.B. Project Number 05-004-PC
K:\Shared\PROJECTS\Senior Wellness Center\Senior Wellness Ctr-Geotech Report.Doc

TABLE OF CONTENTS

LETTER OF TRANSMITTAL i

1.0 PROJECT DESCRIPTION 1
- 1.1 Scope of Services 1

2.0 FIELD INVESTIGATIONS 2
- 2.1 Borings 2

3.0 SUBSURFACE CONDITIONS 2
- 3.1 Soil Conditions 2
- 3.2 Groundwater 3

4.0 LABORATORY TESTING 3

5.0 CONCLUSIONS/RECOMMENDATIONS 4
- 5.1 Foundations 4
- 5.2 Slab-on-Grade 5
- 5.3 Retaining Walls 5
- 5.4 Temporary Excavation Support 6
- 5.5 Earthworks 6

6.0 LIMITATIONS 7

ATTACHMENTS:

Drawing Number 1 - Project Location Map
Drawing Number 2 - Site Exploration Plan

APPENDIX A - Records of Soil Exploration

APPENDIX B - Laboratory Test Results
- Table No. B - 1
  - Summary of Geotechnical Laboratory Test Results
- Gradation Analysis Curves

1.0 PROJECT DESCRIPTION

The Office on Aging of the District of Columbia plans to develop a senior wellness center in Ward One of Washington, DC. The proposed center shall be located on a government-owned parcel of land measuring 6,600 square feet and located at 3531-3537 Georgia Avenue in the northwest quadrant of Washington, D.C. A Project Location Map presented as Drawing Number 1 shows the relative location of the site. Lance Bailey & Associates, Inc. (LBA) of Silver Spring, MD is the Architect for the project and is coordinating the design and preparation of construction documents for this project. As a sub-consultant to LBA, Thomas L. Brown Associates, PC (TLB) of Washington, DC provided the requisite geotechnical services in support of their efforts. This study included an investigation of the subsurface conditions for the design of foundation elements of the proposed structure.

The plan is to construct a three story structure measuring approximately 3,500 square feet per floor with an elevator near the northwest corner of the building. Finished floor elevations have not been provided to us but plans call for a storage cellar below the first floor of the northeast quadrant of the structure. That would place the lowest floor approximately 8.0 feet below surface grades. The row houses that currently exist on the project site shall be demolished to facilitate construction of the Senior Wellness Center.

A limited geotechnical study comprising four (4) borings was performed to characterize the site for the design of foundation elements, walls and other geotechnical related issues. The borings were drilled in the existing open areas outside the building footprint. Drawing Number 2 is a Site Exploration Plan and shows the building footprint in relation to Georgia Avenue, NW and location of the borings. The ground elevation levels at the boring locations were estimated from a layout drawing of the site provided by LBA.

1.1 Scope of Services

TLB's scope of services consisted of:

- Performing field exploratory studies at discrete locations designated by Borings B-1 through B-4 located outside the planned footprint of the proposed structure as shown in Drawing Number 2.
- Performing visual classification of the retrieved soil samples during the field explorations.
- Performing laboratory tests on representative samples.
- Analyzing soil and groundwater conditions encountered as they pertain to the new building.
- Preparing this report describing the conditions encountered and providing recommendations for the geotechnical-related aspects of the proposed structure.

The following paragraphs summarize the activities, conclusions, and recommendations resulting from TLB's efforts.

2.0 FIELD INVESTIGATIONS

2.1 Borings

TLB's field Explorations included:

- Staking out the four test borings at the site and obtaining the necessary utility verification and clearances with the relevant agencies prior to commencing any intrusive explorations.
- Mobilizing a truck mounted Acker AD-2 drill rig and the necessary equipment to perform the planned field explorations.
- Drilling test borings (i.e. B-1 through B-4) at discrete locations within the project site but outside the footprint of the proposed building. The relative locations of the completed borings are shown on the Site Exploration Plan presented as Drawing Number 2.
- Performing Standard penetration tests (SPT) in accordance with ASTM D 1586 typically at 2.5-foot intervals for the top 10-feet and at 5.0 foot intervals thereafter. The four borings were advanced to a depth of 25.0 feet each.
- Collecting bulk samples of representative material from select borings.
- Determining depth to groundwater table during and upon completion of drilling.

Following the completion of our explorations, each of the borings was backfilled with auger cuttings and paved areas were patched with cold asphalt.

3.0 SUBSURFACE CONDITIONS

Logs describing the subsurface conditions encountered in each boring are presented as 'Records of Soil Exploration' in Appendix A. The descriptive terminology used to classify the soils encountered during this study is summarized on the first page of Appendix A. The SPT N-values are used in layer descriptions in the following paragraphs as well as in the geotechnical analysis and design to develop the recommendations that are presented in subsequent paragraphs.

3.1 Soil Conditions

As indicated on the Records of Soil Exploration, existing fills or possibly disturbed soils blanket the site. Beneath those fills, sand and/or clay with some silt of varying consistencies were logged to the bottoms of the borings. The soil conditions are grouped and described as follows:

Existing Fill/Possibly Disturbed Soils comprised of primarily fine to coarse sand and clay were logged throughout the site to approximate elevations varying between 186.5-feet and 183.0-feet. Fine gravel, some silts, trace brick and concrete, each in varying proportions, were logged within those fills. The SPT N-values within the existing fills characteristically ranged from 7 to 13 blows per foot within the sand fill, indicating loose to medium dense

conditions and from 8 to 13 blows per foot within the clay fill, suggesting medium stiff to stiff consistencies.

Sand with varying amounts of gravel and clay was the predominant soil logged beneath the fills. Those sands were encountered to the termini of Borings B-1 through B-3 and to Elevation 169 feet at Boring B-4. The SPT N-values within the sands varied from 5 to 43 blows per foot, suggesting very loose to dense in-situ conditions.

Clay to Silty Clay layers were encountered at various elevations within the sand in Borings B-1 through B-3. At Boring B-4, clay was logged from Elevation 179 feet to 174 feet and beneath the sand at Elevation 169 feet to the bottom of the boring. The SPT N-values within the clay varied between 9 and 34 blows per foot suggesting medium stiff to hard consistencies.

3.2 Groundwater

Groundwater was observed in Borings B-1, B-2 and B-3 during drilling activities at depths of 20.0 feet, 15.5 feet and 19.0 feet, respectively. Because of the clay soils encountered, the site has the potential of having perched water conditions, which may impact the design and construction of the foundations for the new building. In addition, seasonal and/or long-term fluctuations of the site's groundwater levels should be anticipated.

4.0 LABORATORY TESTING

Representative soil samples obtained during the subsurface investigation were subjected to laboratory testing which included the general index tests of natural moisture content (ASTM D 2216), Atterberg limits (ASTM D 4318) and gradation analysis (ASTM D 422). Appendix B presents a summary of those test results in Table No. B-1, followed by plots of the gradation data.

Laboratory test results indicate that within the clay samples retrieved from a depth of 5.0 feet at Boring B-1 and 10.0 feet at Boring B-4, natural moisture contents were 15.4 percent and 17.7 percent respectively. At Boring B-2, a moisture content of 26.6 percent was recorded for a clay sample taken from a depth of 20.0 feet which is below the ground water level encountered at that boring. Moisture content within the sand samples tested, varied from 9.3 to 21.2 percent. The average natural moisture content for those sands was 15.4 percent.

The liquid limits for the fines within the sands tested at Borings B-1 and B-2 were 33 and 31 respectively. The respective plasticity indexes for those fines were 10 and 7. Within the clay samples tested, the liquid limits ranged from 28 to 74, while the plasticity indexes ranged from 11 to 44.

Gradation analysis test results indicate the coarse grained material encountered at the site had 79 to 100 percent passing the #4 sieve, while 20 to 41 percent passed the #200 sieve. For the clay soil tested, 100 percent passed the #4 sieve and 65 percent passed the #200 sieve.

The remaining soil samples are being temporarily stored in our Glen Burnie, Maryland laboratory and are available for review. Forty-five (45) days following the submittal of this report, however, those samples may be discarded unless other arrangements are made.

5.0 CONCLUSIONS/RECOMMENDATIONS

This geotechnical exploration was conducted to determine how soil and groundwater conditions might impact the design and construction of the foundations for the proposed three story structure. The exploratory borings drilled during this investigation are located outside the proposed building footprint due to lack of access to the proposed building footprint area as the existing structure has not been demolished.

Based on the subsurface conditions encountered to date and laboratory tests that have been performed, marginal to competent soil conditions were encountered at the site. Existing fills with low SPT values ranging from 7 to 9 blows per foot were logged within the top 2.5 to 7.0 feet. If fills are exposed within the building footprint, those fills will require removal from load bearing areas. No foundation loading information or site grading plans were available at the time of this study but the floor level of the planned cellar is anticipated to be at approximately Elevation 182 feet. Given the aforementioned soil conditions and our understanding of the project, nothing should preclude the construction of the building.

5.1 Foundations

It is recommended to use reinforced concrete footings for the support of the proposed structure. Fill soils were the predominant materials logged below the footing elevations in the vicinity of Borings B-1, B-2 and B-4. Those fill soils represented by low N-values of about 9 should be undercut and replaced with at least a 2-foot mat of controlled structural fill or #57 stone. For footings supported on **controlled structural fill**, it is recommended to design them using an **allowable bearing capacity of 2000 psf.** Competent sands with SPT N-values greater than 20 were logged below the anticipated cellar floor elevation in the vicinity of Boring B-3. Footings within that section of the proposed building could be sized based on a **maximum bearing capacity of 3000 psf.**

Stepped down and/or adjacent column footings should be positioned outside of a 45° slope line extending outward from the underside of the nearest adjacent footings. Competent undisturbed natural soil and/or compacted structural fill should exist everywhere within this zone of footing influence. Strict adherence to the 'Earthwork' section of this report is recommended. Regardless of the computed footing sizes, we recommend all continuous footings have a minimum width of 18.0 inches. We also recommend that isolated column footings should have a least plan dimension of 24.0 inches. To preclude damage due to frost or other seasonal factors, all footings should be embedded a minimum of 30.0 inches below finished adjacent grades. Care shall be exercised to ensure that the soils encountered at the founding grade remain dry.

5.2 Slab-on-Grade

The floors for the proposed structure may be designed as slabs-on-grade. It is recommended that the fill soils encountered should be thoroughly proof-rolled. Strict adherence to the 'Earthwork' portion in Section 5.5 of this report is recommended.

It is recommended that a minimum 4.0-inch layer of porous washed stone, consisting of gravel or crushed rock, be placed immediately beneath all at-grade slabs. Surface runoff should be directed away from all structures. A polyethylene membrane or similar vapor barrier should be used to separate the concrete from the porous stone or subgrade. Although no unusual loads are expected, we recommend at-grade concrete slabs be at least lightly reinforced with a medium weight wire mesh. Perimeter footing drains will be required where at-grade slabs are placed below finished exterior grades.

5.3 Retaining Walls

Exterior retaining walls shall be required to support material described by the Boring Data in section 3.1 above. The retaining walls may be as much as 8.0-feet in height. Use of reinforced concrete walls is recommended.

Rigid Walls

Where the concrete walls are restrained at the top (rigid walls), they shall be designed based on at-rest earth pressure conditions. The design of the walls should be based on the supported sands having a friction angle, $\phi = 29$ degrees and a unit weight of 115 pcf. Using those parameters, an at-rest earth pressure coefficient, **k_0 of 0.52** for sand and corresponding **minimum equivalent fluid weight of 60 pcf** is recommended for the design of the rigid walls.

Cantilever Walls

Where cantilever retaining walls are required, they shall be designed based on active earth pressure conditions. The design of the cantilever walls should be based on the supported sands having a friction angle, $\phi = 29$ degrees and a unit weight of 115 pcf. Using those parameters, an active earth pressure coefficient, **k_a of 0.35** for sand and corresponding **minimum equivalent fluid weight of 40 pcf** is recommended for the design of the cantilever walls. Because footings will be established in mostly sand material, a horizontal friction coefficient of 0.55 is recommended between the concrete and soil to resist sliding.

The recommended earth pressure coefficients and fluid weights assume drained conditions and a horizontal backslope will exist behind the walls. Should sloped backfills be designed for, these parameters will need to be revised to correspond to the slope angle. Should walls be designed for submerged conditions, hydrostatic pressure shall be added to the computed horizontal pressures. Appropriate damp-proofing and vertical drainage board such as TerraDrain, by Webtech, Inc. should be provided for all below grade permanent walls. A gravel filter pack may be used in lieu of the vertical drainage board.

5.4 Temporary Excavation Support

Temporary slopes or support of excavation will be required during excavation, especially during construction of the cellar. The stability of temporary slopes will ultimately depend on the soils exposed during site grading. Preliminarily, it is recommended that no temporary slopes should be graded steeper than 1.5H:1.0V without the review and approval of an Engineer registered in the District of Columbia specializing in geotechnical/foundation engineering.

We recommend all temporary excavation supports be designed for the appropriate active and/or passive earth pressure conditions using active and passive earth pressure coefficients of 0.33 and 3.0 respectively. A unit weight of 115 pcf is recommended for computing lateral earth pressure. Surcharge loads occurring within a horizontal distance equal to the depth of the excavation should also be superimposed on the recommended earth pressure loads. We recommend, however, that the contractor be required to engage a professional engineer registered in the District of Columbia to design and seal the plans and drawings for all of his temporary structures.

5.5 Earthworks

We recommend inspection of all subgrade materials once they are cut to planned subgrade elevations. Existing fill soils should be removed from under footing locations and slab areas. Any deleterious material encountered during excavation should be removed. We recommend the subgrades exposed during construction be proof-rolled and/or densified in-place with an approved roller or other equipment while being inspected by a Geotechnical Engineer or an experienced engineering technician. Any soft or loose zones that are identified which cannot be densified in-place should be undercut to a depth, length and width as directed by inspecting Engineer. Where required, based on poor soils that are identified, we preliminarily recommend a maximum of 24 inches of undercut. Deeper undercuts should be avoided, and we ask that we be extended an opportunity to review those conditions warranting any deeper undercuts before undercutting commences. Undercut volume shall be backfilled to grade with structural fill meeting Unified Soil Classification (USCS) of SC or coarser, compacted with a vibratory compactor, protected and maintained.

Prior to placement of fill materials within the subexcavation, it is recommended to place at the bottom of the excavation a geofabric, such as Mirafi 500X, or equivalent for separation and stabilization. We recommend the structural fill be compacted as follows:

- Structural Fills -- All fills placed directly below or within the zone of influence of any bearing foundation, structural slab or paved area - 95% AASHTO T-180 (ASTM D-1557).

Regardless of the category, we recommend that all site fills be placed in essentially horizontal layers or lifts having a minimum loose lift thickness commensurate with the equipment being utilized to perform the compaction. In no case should those lifts exceed eight (8) inches. Each lift should be uniformly compacted to equal or exceed the specified minimum percentage of the maximum dry unit weight.

All offsite borrow materials or imported material that may be borrow material, select fill or other approved material shall consist of soils meeting Unified Soil Classification System (USCS) of SC or coarser. All soil materials that fall within the USCS type ML, CL, OL, MH, CH, OH, PT, as well as material containing organic matter, ashes, cinders, refuse, frozen or other unsuitable materials are prohibited for use as backfill. Material used in backfill shall be a well-graded soil-aggregate mixture with a Liquid Limit (LL) not greater than 30 and a maximum Plasticity Index (PI) of 10.

Specifications should require slopes of exposed surfaces be maintained to facilitate surface runoff away from load bearing areas and to prevent ponding of surface water. If ponding of surface water does occur, it should be removed by pumping, ditching or as otherwise directed by the inspecting geotechnical engineer. During periods of anticipated inclement weather, exposed surfaces shall be graded and sealed to preclude infiltration of surface water. Subgrades, which become disturbed due to inclement weather or construction traffic and require over-excavation, should be reworked at no additional cost to the owner.

6.0 LIMITATIONS

All subsurface and field investigations require the extrapolation of limited amounts of data based on general geologic knowledge. This report has been prepared to aid in the evaluation of the site. This report is intended to assist Lance Bailey & Associates, Inc., with the design aspects of the proposed multi-purpose senior wellness center building as well as the earthwork related portions of the project based upon our understanding of the design details, criteria, and utilization of the planned facilities as outlined herein. The water level observations and geologic descriptions presented on the accompanying logs have been made with reasonable care and accuracy, but must be considered only an approximate representation of subsurface conditions to be encountered beyond a particular exploratory location.

We recommend that a Geotechnical Engineer or a technician under his direction be retained during construction to monitor subgrade preparation and construction and to evaluate general construction techniques as they may affect foundations and utilities at the site. The Engineer or technician should be instructed to monitor subsurface conditions encountered during construction to see that those conditions are compatible with the findings of this study. If significant variations are encountered or if the proposed locations or designs are altered, we should be contacted and provided the opportunity to appropriately review and/or modify these recommendations.

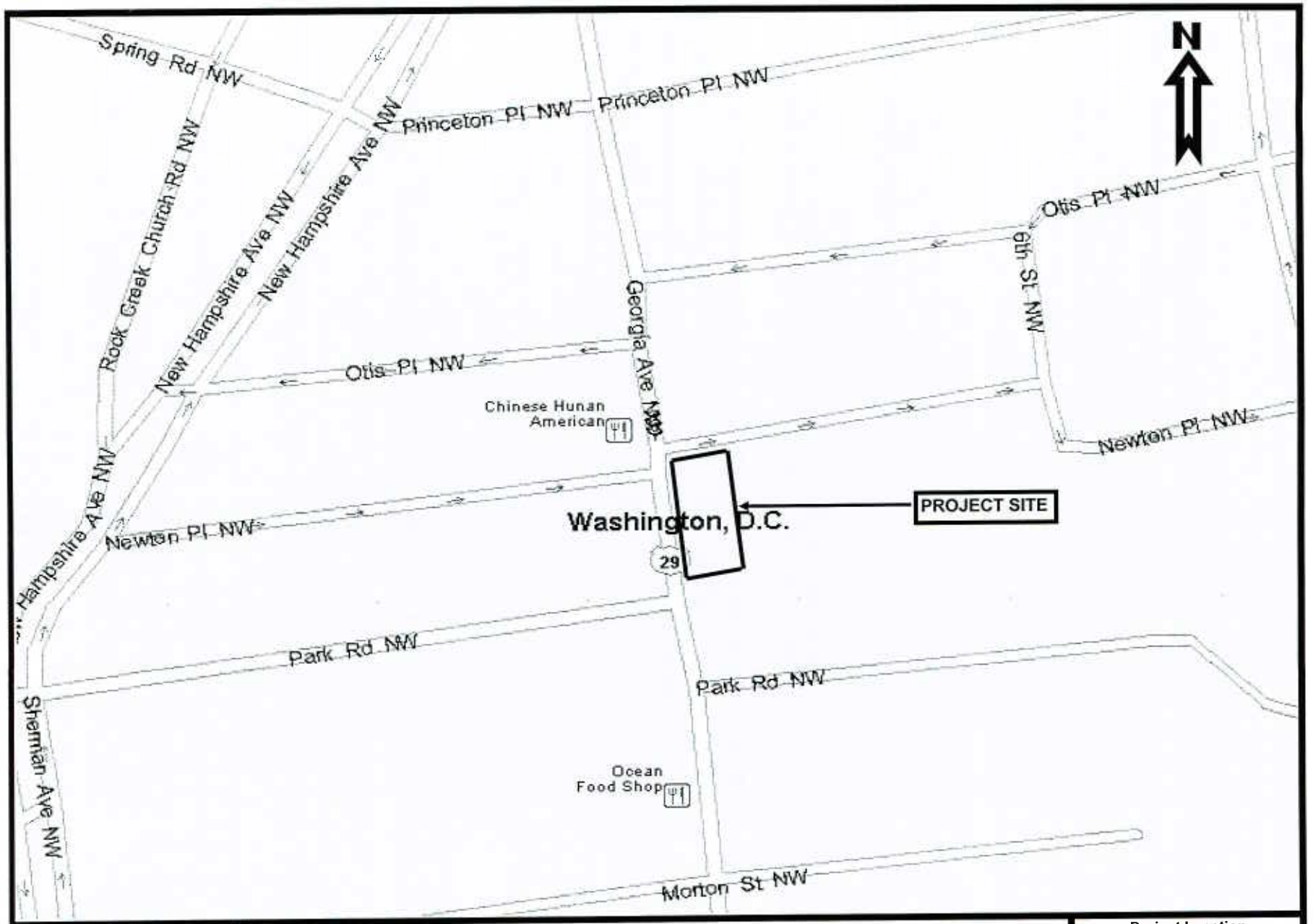

SENIOR WELLNESS CENTER
3531 - 3537 GEORGIA AVENUE, NW
NORTHWEST, WASHINGTON, D.C.

Project Location
Senior Wellness Center
Washington, D.C.
Drawing Number 1

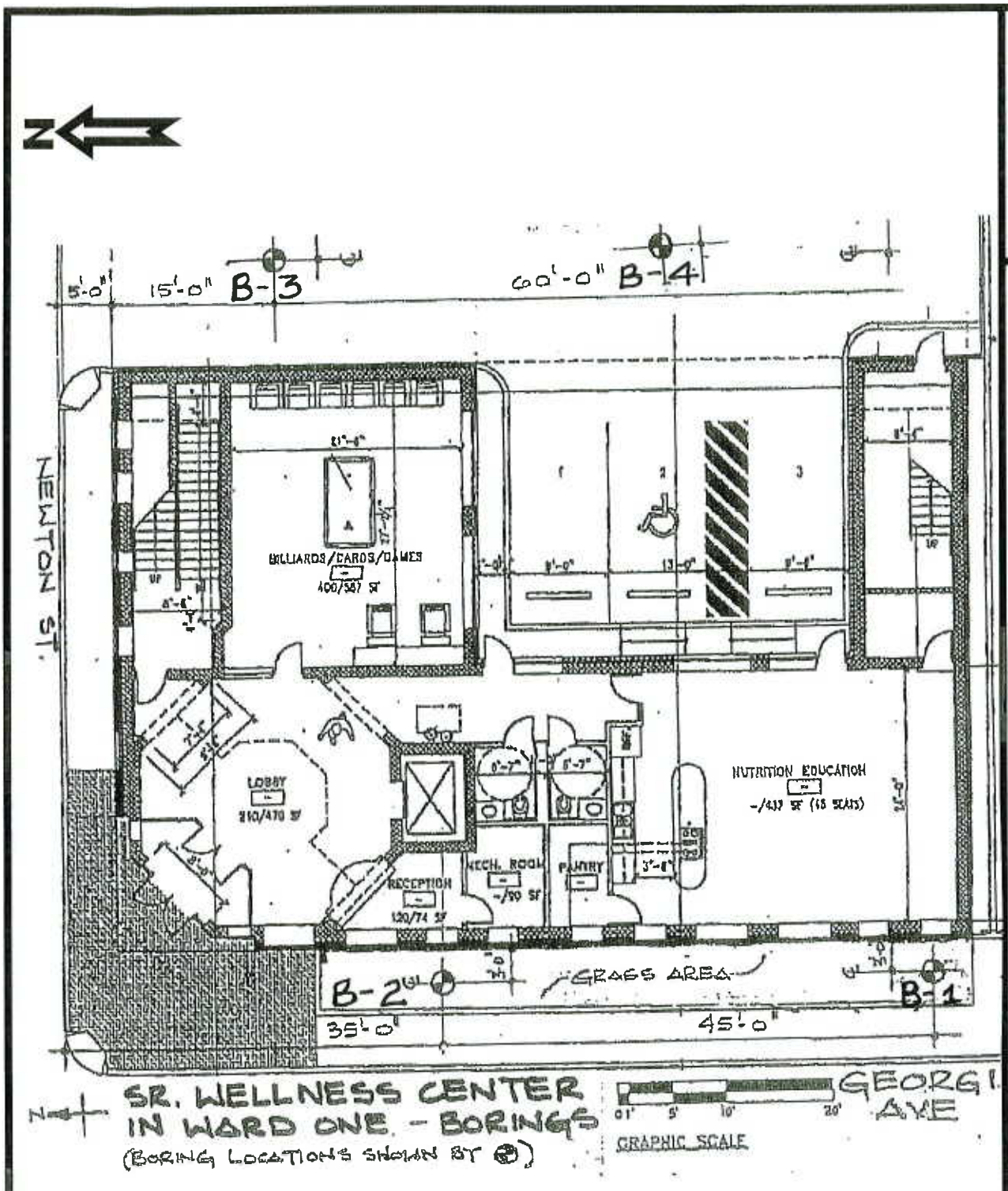

SR. WELLNESS CENTER
IN WARD ONE. - BORINGS
(BORING LOCATIONS SHOWN BY ⊕)

Site Exploration Plan
Senior Wellness Center
Washington, D.C.
Drawing Number 2

SENIOR WELLNESS CENTER
3531 - 3537 GEORGIA AVENUE, NW
NORTHWEST, WASHINGTON, D.C.

APPENDIX A

RECORDS OF SOIL EXPLORATION

GENERAL CLASSIFICATION SUMMARY FOR SOIL AND ROCK EXPLORATION

SOIL

Particle Size Identification

Boulders		- 12 inch diameter or more
Cobbles		- 3 to 12 inch diameter
Gravel	- Coarse	- 3/4 to 3 inches
	- Fine	- 4.75mm to 3/4 inch
Sand	- Coarse	- 2.00mm to 4.75 mm [Sieve #10 to #4]
	- Medium	- 0.4mm to 2.00mm [Sieve #40 to #10]
	- Fine	- 0.075mm to 0.4mm [Sieve #200 to #40]
Silt/Clay		- less than 0.075mm (Cannot see particles)
Silt		- Atterberg limits plot below "A" line
Clay		- Atterberg limits plot above "A" line

Relative Proportions

Descriptive Term	Percent
Trace	1- 10
Little	11 - 20
Some	21 - 35
Adjective	36 - 50
Noun	50 or more

COHESIONLESS SOILS

Density	*N-Value*
Very loose	- 5 blows/ft. or less
Loose	- 6 to 10 blows/ft.
Medium Dense	- 11 to 30 blows/ft.
Dense	- 31 to 50 blows/ft.
Very Dense	- 51 blows/ft. or more

COHESIVE SOILS

Consistency	*N-Value*
Very Soft	- 3 blows/ft. or less
Soft	- 4 to 5 blows/ft.
Medium Stiff	- 6 to 10 blows/ft.
Stiff	- 11 to 15 blows/ft.
Very Stiff	- 16 to 30 blows/ft.
Hard	- 31 blows/ft. or more

Classifications on logs are made by visual inspection.

Standard Penetration Test - Driving a 2.0" O.D., 1 3/8" I.D., sampler a distance of 1.0 foot into undisturbed soil with a 140 pound hammer free failing a distance of 30.0 inches. It is customary for us to drive the spoon 6.0 inches of penetration to seat into undisturbed soil, and then perform the test. The number of hammer blows for seating the spoon and making the tests are recorded for each 6.0 inches of penetration on the drill log (Example: 6-8-9). The standard penetration test resistance or "N"-value can be obtained by adding the last two figures (i.e., 8 + 9 = 17 blows/ft.).

Strata Changes - In the column "Soil Descriptions" on the drill log, the horizontal lines represent estimated strata changes.

Groundwater observations were made at the times indicated. Porosity of soil strata, weather conditions, site topography, etc., may cause changes in the water levels indicated on the logs.

ROCK

Rock Quality Designation (RQD) - The sum of the lengths of pieces of recovered core which are greater than four inches in length, expressed as a percentage of the total length of the core run. If the core has been broken by the drilling process, it is considered to be intact provided the broken fragments are cumulatively greater than 4 inches in length. For this investigation, vertical separations which split the core have not been considered discontinuities when determining RQD.

Recovery (REC) - The total length of core recovered expressed as a percentage of the total length of that coring run.

ROCK CLASSIFICATION	RQD	DRILLING METHOD
Decomposed Rock	N/A	Rotary or Auger Drilling with SPT N-value > 100 blows/foot
Weathered/Highly Jointed Rock	0 – 50	Requires Diamond Core Drilling
Moderately Jointed to Jointed	50 – 75	Requires Diamond Core Drilling
Relatively Sound to Sound	75 – 100	Requires Diamond Core Drilling

THOMAS L. BROWN ASSOCIATES, P.C.
Washington, D.C.

RECORD OF SOIL EXPLORATION

Contracted With: Lance Bailey & Associates — Boring #: B-1
Project Name: Senior Wellness Center, 3531-3537 Georgia Avenue — Job #: 05-004
Location: Northwest, Washington, D.C.

SAMPLER

Datum		Hammer Wt.	140 lb	Hole Diameter	8 in	Foreman	M. Gray
Surf. Elev.	190.0 ft	Hammer Drop	30 in	Rock Core Dia.	N/A	Inspector	R. Njuguna
Date Started	6/2/05	Spoon Size	2 in	Boring Method	HSA	Date Completed	6/2/05

ELEV. (ft)	SOIL DESCRIPTION Color, Moisture, Density, Plasticity, Size Proportions	STRA DEPTH (ft)	SOIL SYMBOL	DEPTH SCALE	SAMPLE Cond	Blows/6"	No.	Type	Rec (in)	BORING & SAMPLE NOTES
188.0	Brown, moist, loose, fine to coarse **SAND**, little clay, trace bricks, concrete, **(FILL)**	2.0			D	3-2-5	1	DS	8	1. Water encountered at 20.0 ft. 2. 1 bag sample collected from 2.5 to 10.0 ft. 3. Boring backfilled upon completion.
185.5	Brown, moist, loose, clayey fine to coarse **SAND**, little gravel, concrete, **(FILL)**	4.5			D	3-3-5	2	DS	14	
183.0	Brown, moist, medium stiff, **CLAY**, some fine to medium sand, trace gravel, **(FILL)**	7.0		5	I/D	3-4-4	3	DS	16	
180.5	Brown, moist, medium stiff, **CLAY**, trace fine sand	9.5			I/D	2-3-6	4	DS	18	
177.0	Light brown, moist, medium dense, fine to coarse **SAND**, trace gravel	13.0		10	D	51-22-5	5	DS	10	
168.0	Light brown, wet, very loose, fine to medium **SAND**, trace silt	22.0		15	D	3-3-2	6	DS	16	
				20	D	2-4-6	7	DS	4	
165.0	Yellowish brown, gray, moist, medium dense, clayey fine **SAND** **[USCS: SC]**	25.0		25	I/D	7-10-12	8	DS	18	
	Bottom of Boring at 25.0 ft									

SAMPLER TYPE
DS - DRIVEN SPLIT SPOON
PT - PRESSED SHELBY TUBE
CA - CONTINUOUS FLIGHT AUGER
RC - ROCK CORE

SAMPLE CONDITIONS
D - DISINTEGRATED
I - INTACT
U - UNDISTURBED
L - LOST

GROUNDWATER DEPTH
AT COMPLETION ____ ft
AFTER ____ HRS. ____ ft
AFTER 24 HRS. ____ ft
CAVED AT 12.0 ft

BORING METHOD
HSA - HOLLOW STEM AUGERS
CFA - CONTINUOUS FLIGHT AUGERS
DC - DRIVING CASING
MD - MUD DRILLING

STANDARD PENETRATION TEST DRIVING 2" OD SAMPLER 1' WITH 140# HAMMER FALLING 30": COUNT MADE AT 6" INTERVALS

THOMAS L. BROWN ASSOCIATES, P.C.
Washington, D.C.

RECORD OF SOIL EXPLORATION

Contracted With: Lance Bailey & Associates — Boring #: B-2
Project Name: Senior Wellness Center, 3531-3537 Georgia Avenue — Job #: 05-004
Location: Northwest, Washington, D.C.

SAMPLER

Datum		Hammer Wt.	140 lb	Hole Diameter	8 in	Foreman	M. Gray
Surf. Elev.	190.0 ft	Hammer Drop	30 in	Rock Core Dia.	N/A	Inspector	R. Njuguna
Date Started	6/2/05	Spoon Size	2 in	Boring Method	HSA	Date Completed	6/2/05

ELEV. (ft)	SOIL DESCRIPTION Color, Moisture, Density, Plasticity, Size Proportions	STRA DEPTH (ft)	SOIL SYMBOL	DEPTH SCALE	SAMPLE Cond	Blows/6"	No.	Type	Rec (in)	BORING & SAMPLE NOTES
188.0	Dark brown, moist, loose, fine to coarse **SAND**, some silty clay, glass, trace roots, **(FILL)** **[USCS: SC-SM]**	2.0			D	2-4-4	1	DS	7	1. Water encountered at 15.5 ft. 2. Boring backfilled upon completion.
185.5	Brown, moist, medium stiff, **CLAY**, little fine to coarse sand, trace gravel, **(FILL)**	4.5			I/D	4-4-5	2	DS	12	
183.0	Brown, moist, loose, clayey fine to coarse **SAND**, **(POSSIBLE FILL/DISTURBED SOIL)**	7.0		5	I/D	4-5-3	3	DS	14	
180.5	Reddish brown, moist, loose, fine to medium **SAND**, some silty clay, trace gravel **[USCS: SC-SM]**	9.5			I/D	4-4-5	4	DS	18	
177.0	Light brown, moist, medium dense, fine to coarse **SAND**, little gravel, trace silt	13.0		10	I/D	13-10-11	5	DS	16	
172.0	Brownish gray, moist, medium dense, fine to coarse **SAND**, trace silt	18.0		15	I/D	7-7-8	6	DS	18	
168.0	Gray, moist, very stiff, **CLAY**, trace silt	22.0		20	I/D	6-8-10	7	DS	18	
165.0	Yellowish brown, light gray, moist, dense, fine **SAND**, some clay **[USCS: SC]**	25.0		25	I/D	10-15-19	8	DS	18	
	Bottom of Boring at 25.0 ft									

SAMPLER TYPE
DS - DRIVEN SPLIT SPOON
PT - PRESSED SHELBY TUBE
CA - CONTINUOUS FLIGHT AUGER
RC - ROCK CORE

SAMPLE CONDITIONS
D - DISINTEGRATED
I - INTACT
U - UNDISTURBED
L - LOST

GROUNDWATER DEPTH
AT COMPLETION ____ ft
AFTER ____ HRS. ____ ft
AFTER 24 HRS. ____ ft
CAVED AT 13.5 ft

BORING METHOD
HSA - HOLLOW STEM AUGERS
CFA - CONTINUOUS FLIGHT AUGERS
DC - DRIVING CASING
MD - MUD DRILLING

STANDARD PENETRATION TEST DRIVING 2" OD SAMPLER 1' WITH 140# HAMMER FALLING 30": COUNT MADE AT 6" INTERVALS

THOMAS L. BROWN ASSOCIATES, P.C.
Washington, D.C.

RECORD OF SOIL EXPLORATION

Contracted With: Lance Bailey & Associates — Boring #: B-3
Project Name: Senior Wellness Center, 3531-3537 Georgia Avenue — Job #: 05-004
Location: Northwest, Washington, D.C.

SAMPLER

Datum		Hammer Wt.	140 lb	Hole Diameter	8 in	Foreman	M. Gray
Surf. Elev.	190.0 ft	Hammer Drop	30 in	Rock Core Dia.	N/A	Inspector	
Date Started	6/6/05	Spoon Size	2 in	Boring Method	HSA	Date Completed	6/6/05

ELEV. (ft)	SOIL DESCRIPTION Color, Moisture, Density, Plasticity, Size Proportions	STRA DEPTH (ft)	SOIL SYMBOL	DEPTH SCALE	SAMPLE Cond	Blows/6"	No.	Type	Rec (in)	BORING & SAMPLE NOTES
	Reddish brown, moist, loose, fine to coarse **SAND**, little gravel, trace silt, **(FILL)**				I/D	2-3-4	1	DS	9	1. Water encountered at 19.0 ft.
187.5		2.5								
	Brown, moist, loose, silty fine to coarse **SAND**, trace brick, **(POSSIBLE FILL)**				I/D	4-4-4	2	DS	7	
185.0		5.0		5						
	Brown, moist, loose, fine to coarse **SAND**, some gravel, little clay **[USCS: SC]**				I/D	2-2-4	3	DS	18	
182.5		7.5								
	Orange, brown, moist, dense, gravelly fine to coarse **SAND**, trace silt				I/D	13-22-21	4	DS	14	
180.0		10.0		10						
	Orange, moist, medium dense, fine to coarse **SAND**, some gravel				I/D	9-11-9	5	DS	18	
175.0		15.0		15						
	Light brown, wet, medium dense, fine to coarse **SAND**, little gravel				I/D	6-9-11	6	DS	18	
170.0		20.0		20						
	Light gray, moist, very stiff, silty **CLAY**, trace fine sand				I/D	7-11-13	7	DS	18	
166.5		23.5								
	Light gray, moist, dense, silty fine to medium **SAND**				I/D	8-12-18	8	DS	18	
165.0		25.0		25						
	Bottom of Boring at 25.0 ft									

SAMPLER TYPE
DS - DRIVEN SPLIT SPOON
PT - PRESSED SHELBY TUBE
CA - CONTINUOUS FLIGHT AUGER
RC - ROCK CORE

SAMPLE CONDITIONS
D - DISINTEGRATED
I - INTACT
U - UNDISTURBED
L - LOST

GROUNDWATER DEPTH
AT COMPLETION Dry ft
AFTER ____ HRS. ____ ft
AFTER 24 HRS. ____ ft
CAVED AT 14.0 ft

BORING METHOD
HSA - HOLLOW STEM AUGERS
CFA - CONTINUOUS FLIGHT AUGERS
DC - DRIVING CASING
MD - MUD DRILLING

STANDARD PENETRATION TEST DRIVING 2" OD SAMPLER 1' WITH 140# HAMMER FALLING 30": COUNT MADE AT 6" INTERVALS

THOMAS L. BROWN ASSOCIATES, P.C.
Washington, D.C.

RECORD OF SOIL EXPLORATION

Contracted With: Lance Bailey & Associates — Boring #: B-4
Project Name: Senior Wellness Center, 3531-3537 Georgia Avenue — Job #: 05-004
Location: Northwest, Washington, D.C.

SAMPLER

Datum		Hammer Wt.	140 lb	Hole Diameter	8 in	Foreman	M. Gray
Surf. Elev.	189.0 ft	Hammer Drop	30 in	Rock Core Dia.	N/A	Inspector	
Date Started	6/6/05	Spoon Size	2 in	Boring Method	HSA	Date Completed	6/6/05

ELEV. (ft)	SOIL DESCRIPTION Color, Moisture, Density, Plasticity, Size Proportions	STRA DEPTH (ft)	SOIL SYMBOL	DEPTH SCALE	SAMPLE Cond	Blows/6"	No.	Type	Rec (in)	BORING & SAMPLE NOTES
	Dark brown, moist, stiff, silty **CLAY**, organics, trace gravel, **(FILL)**				I/D	1-5-8	1	DS	12	1. No water encountered. 2. Boring backfilled upon completion.
186.5		2.5								
	Brown, moist, medium dense, silty fine to coarse **SAND**, little clay				I/D	3-5-8	2	DS	14	
184.0		5.0		5						
	Light brown, moist, loose, fine to coarse **SAND**, some gravel				I/D	4-3-7	3	DS	18	
181.5		7.5								
	Orange, yellow, moist, dense, gravelly fine to coarse **SAND**, trace silt				I/D	17-15-18	4	DS	18	
179.0		10.0		10						
	Orange, light gray, red, moist, very stiff, **CLAY**, some fine sand **[USCS: CL]**				I/D	8-7-11	5	DS	18	
174.0		15.0		15						
	Brown, moist, medium dense, fine to coarse **SAND**, trace silt				I/D	8-10-12	6	DS	16	
169.0		20.0		20						
	Orange, light gray, moist, very stiff, silty **CLAY**, little fine sand				I/D	10-11-15	7	DS	18	
165.5		23.5								
	Orange, light gray, moist, hard, silty **CLAY**, trace fine sand				I/D	15-19-18	8	DS	18	
164.0		25.0		25						
	Bottom of Boring at 25.0 ft									

SAMPLER TYPE
DS - DRIVEN SPLIT SPOON
PT - PRESSED SHELBY TUBE
CA - CONTINUOUS FLIGHT AUGER
RC - ROCK CORE

SAMPLE CONDITIONS
D - DISINTEGRATED
I - INTACT
U - UNDISTURBED
L - LOST

GROUNDWATER DEPTH
AT COMPLETION Dry ft
AFTER ____ HRS. ____ ft
AFTER 24 HRS. ____ ft
CAVED AT 14.0 ft

BORING METHOD
HSA - HOLLOW STEM AUGERS
CFA - CONTINUOUS FLIGHT AUGERS
DC - DRIVING CASING
MD - MUD DRILLING

STANDARD PENETRATION TEST DRIVING 2" OD SAMPLER 1' WITH 140# HAMMER FALLING 30": COUNT MADE AT 6" INTERVALS

APPENDIX B

LABORATORY TEST RESULTS

SUMMARY OF

GEOTECHNICAL LABORATORY TEST RESULTS

Table No. B - 1

SUMMARY OF GEOTECHNICAL LABORATORY TEST RESULTS

SENIOR WELLNESS CENTER

3531 - 3537 GEORGIA AVENUE, NW

NORTHWEST, WASHINGTON, D.C.

T.L.B. JOB No. 05-004

Boring Number	Sample Number	Depth (ft)	Moisture Content (%)	ATTERBERG LIMITS			Gradation Analysis**		
				Liquid Limit	Plastic Limit	Plasticity Index	Percent Passing # 4	Percent Passing # 200	USCS
B-1	S-1	0.0 - 1.5	9.3	33	23	10			
B-1	S-3	5.0 - 6.5	15.4	39	21	18			
B-1	S-8	23.5 - 25.0	21.2				100	41	SC
B-2	S-1	0.0 - 1.5	17.2	31	24	7	92	31	SC-SM
B-2	S-4	7.5 - 9.0	16.8				100	35	SC-SM
B-2	S-7	20.0 - 21.5	26.6	74	30	44			
B-2	S-8	23.5 - 25.0	16.6				100	34	SC
B-3	S-3	5.0 - 6.5	11.3				79	20	SC
B-4	S-5	10.0 - 11.5	17.7	28	17	11	100	65	CL

** See Attached Gradation Analysis Curves

Gradation Analysis Curves

GRADATION ANALYSIS

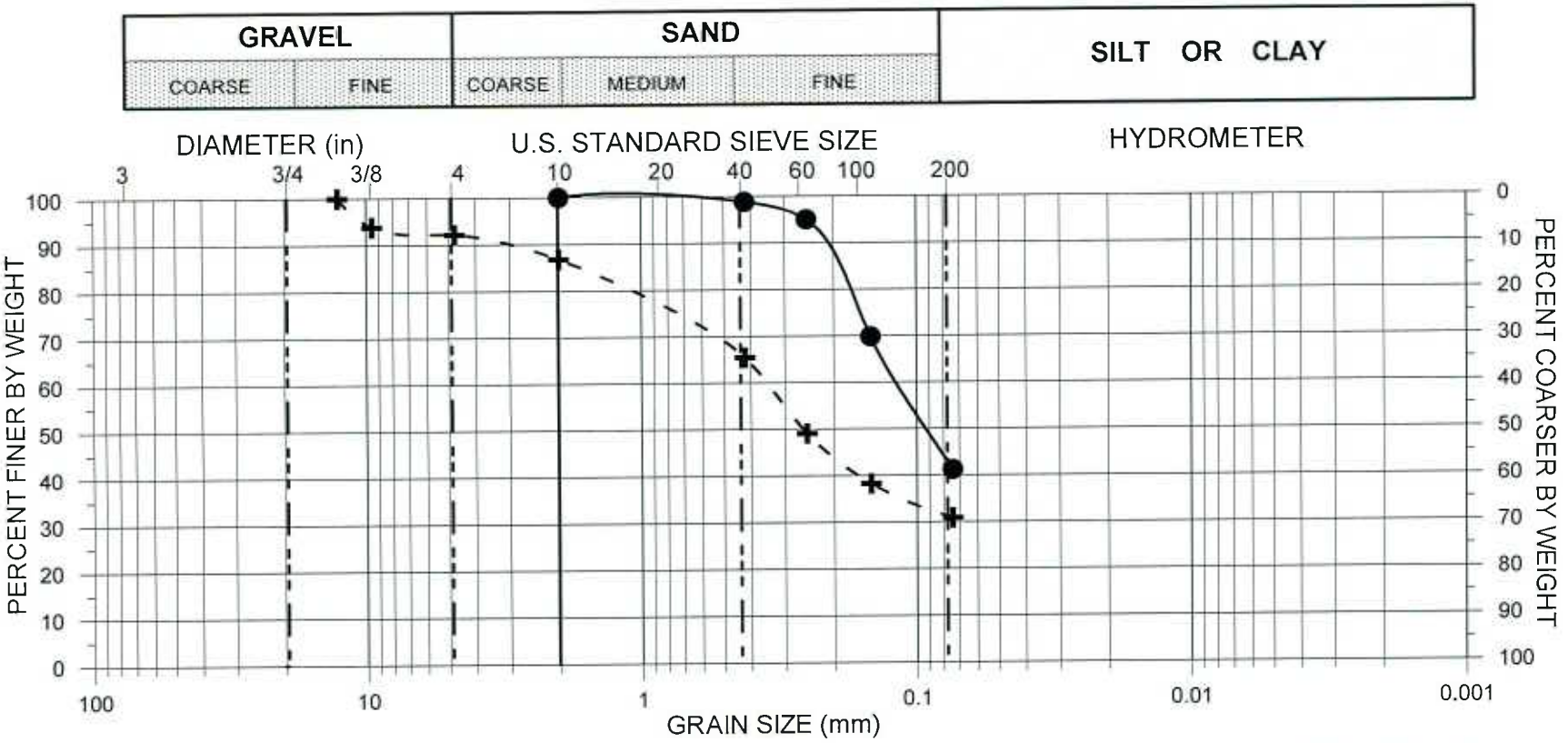

KEY	BORING No.	SAMPLE No.	DEPTH (ft)	MC (%)	LL	PL	PI	SOIL DESCRIPTION
●	B-1	S-8	23.5 - 25.0	21.2	--	--	--	Yellowish brown, gray, clayey fine **SAND** **[USCS: SC]**
+	B-2	S-1	0.0 - 1.5	17.2	31	24	7	Dark brown, fine to coarse **SAND**, some silty clay, trace gravel **[USCS: SC-SM]**

PROJECT NO.	05--004	TEST PROCEDURE USED:			
PROJECT:	SENIOR WELLNESS CENTER	**ASTM D 422**			
LOCATION:	3531-3537 GEORGIA AVENUE, NW, WASHINGTON, D.C.	TESTED BY:	YA	Date:	7/7/2005
THOMAS L. BROWN ASSOCIATES, P.C. *Washington, D.C.*		CHECKED BY:	NRW	Sheet:	1 of 3
		REMARKS:			

GRADATION ANALYSIS

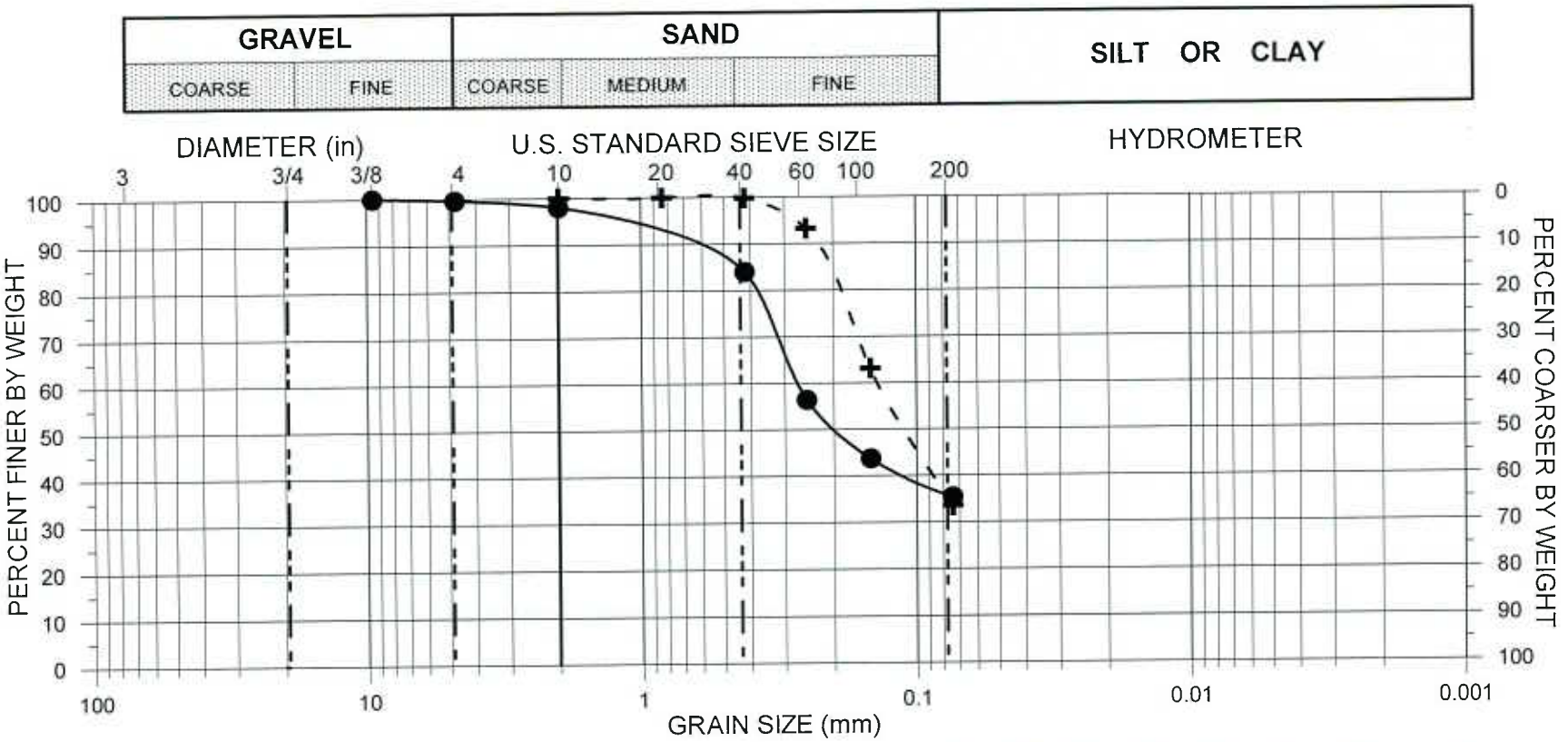

KEY	BORING No.	SAMPLE No.	DEPTH (ft)	MC (%)	LL	PL	PI	SOIL DESCRIPTION
●	B-2	S-4	7.5 - 9.0	16.8	--	--	--	Reddish brown, fine to medium **SAND**, some silty clay, trace gravel **[USCS: SC-SM]**
+	B-2	S-8	23.5 - 25.0	16.6	--	--	--	Yellowish brown, light gray, fine **SAND**, some clay **[USCS: SC]**

PROJECT NO.	05--004	TEST PROCEDURE USED:			
PROJECT:	SENIOR WELLNESS CENTER	**ASTM D 422**			
LOCATION:	3531-3537 GEORGIA AVENUE, NW, WASHINGTON, D.C.	TESTED BY:	YA	Date:	7/7/2005
THOMAS L. BROWN ASSOCIATES, P.C. *Washington, D.C.*		CHECKED BY:	NRW	Sheet:	2 of 3
		REMARKS:			

GRADATION ANALYSIS

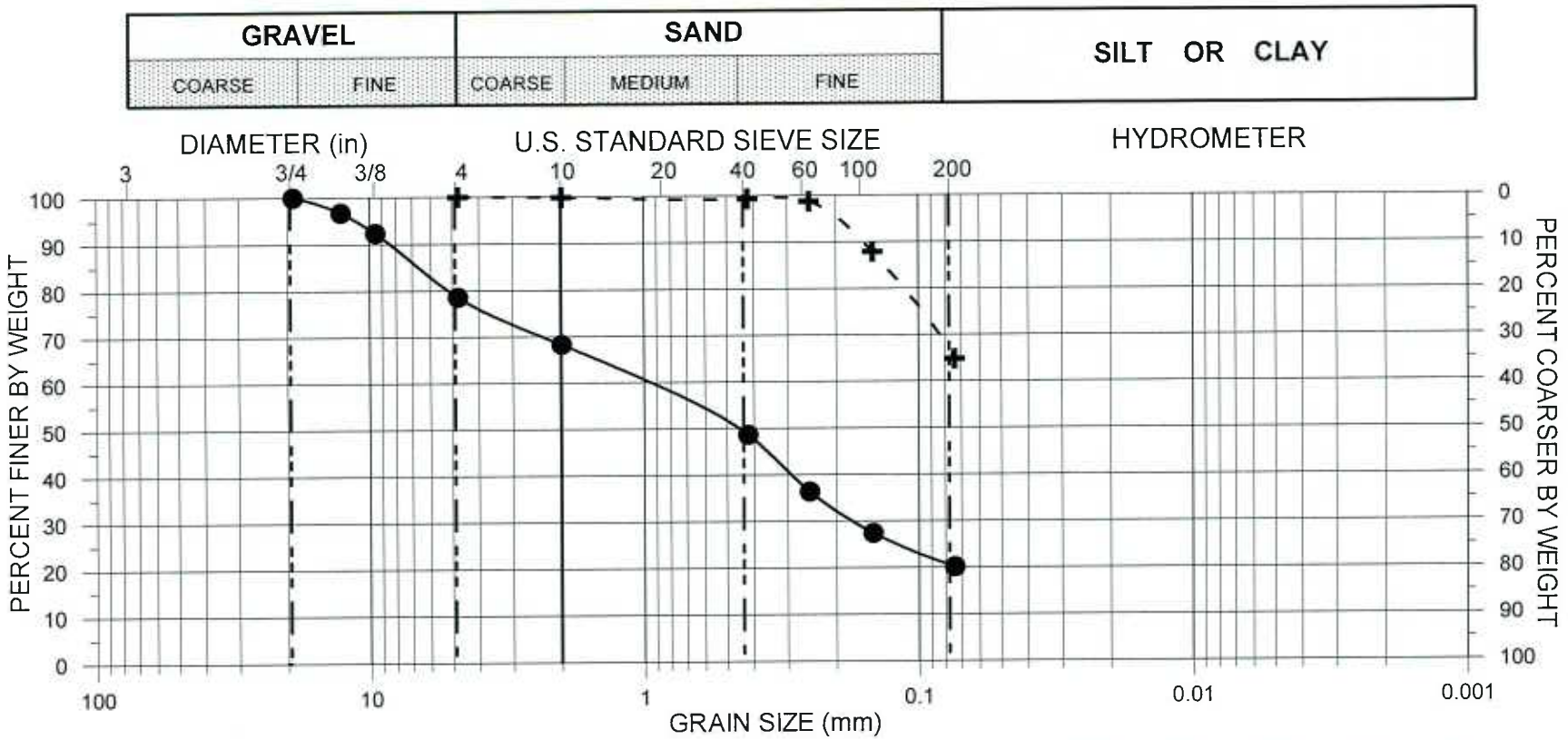

KEY	BORING No.	SAMPLE No.	DEPTH (ft)	MC (%)	LL	PL	PI	SOIL DESCRIPTION
●	B-3	S-3	5.0 - 6.5	11.3	--	--	--	Brown, fine to coarse **SAND**, some gravel, little clay **[USCS: SC]**
✚	B-4	S-5	10.0 - 11.5	17.7	28	17	11	Brown, reddish brown, **CLAY**, some fine sand **[USCS: CL]**

PROJECT NO.	05--004	TEST PROCEDURE USED:			
PROJECT:	SENIOR WELLNESS CENTER	**ASTM D 422**			
LOCATION:	3531-3537 GEORGIA AVENUE, NW, WASHINGTON, D.C.	TESTED BY:	YA	Date:	7/7/2005
THOMAS L. BROWN ASSOCIATES, P.C. *Washington, D.C.*		CHECKED BY:	NRW	Sheet:	3 of 3
		REMARKS:			

8' 2"

6' 6"

THE DISTRICT OF COLUMBIA
MOVING FORWARD WITH

WARD ONE SENIOR WELLNESS CENTER
CONSTRUCTION

2"
2"
4.1"
4.1"

Adrian M. Fenty - Mayor 6"

Jim Graham - DC Council Member, Ward One 3.5"

Clarence Brown, PhD. - Executive Director, DC Office on Aging 3"

Implemented by 2.5"

OFFICE OF PROPERTY MANAGEMENT 3"

FOR 2"

OFFICE ON AGING 4.1"

Architects - Lance Bailey & Associates 3.9"
Tel: (301) 565-2283 Fax: (301) 565-2287 2.6"

Contractor - (Name of Selected Contractor) 3.9"
Tel: (XXX) XXX-XXXX Fax: (XXX) XXX-XXXX 2.6"

**Sign to be approved by COTR before production

Construction Specifications:

1. Whiteboard on Exterior Grade 3/4" Plywood
2. Font: Arial Black (size of lettering indicated to right)
3. Posts: 4" X 4" X 8' Pressure Treated Plywood, Full Height of Plywood Board
4. Footings: 8" X 8" X 36" Concrete Centeredon Wood Post. Bottom of Concrete to be 36" Below Grade, Minimum
5. Embed Posts a Minimum of 6" into Concrete Footings
6. Secure Plywood to Posts at 6" From Top, 6" from bottom and 12" O.C. Vertical
7. Project Sign to be installed level at location determined by COTR
8. Project Sign Height to be 8' from grade.
9. Project Rendering digital file will be given to Contractor upon Notice to Proceed

SIGN NOT TO SCALE

Covered Walkway Standard Drawings

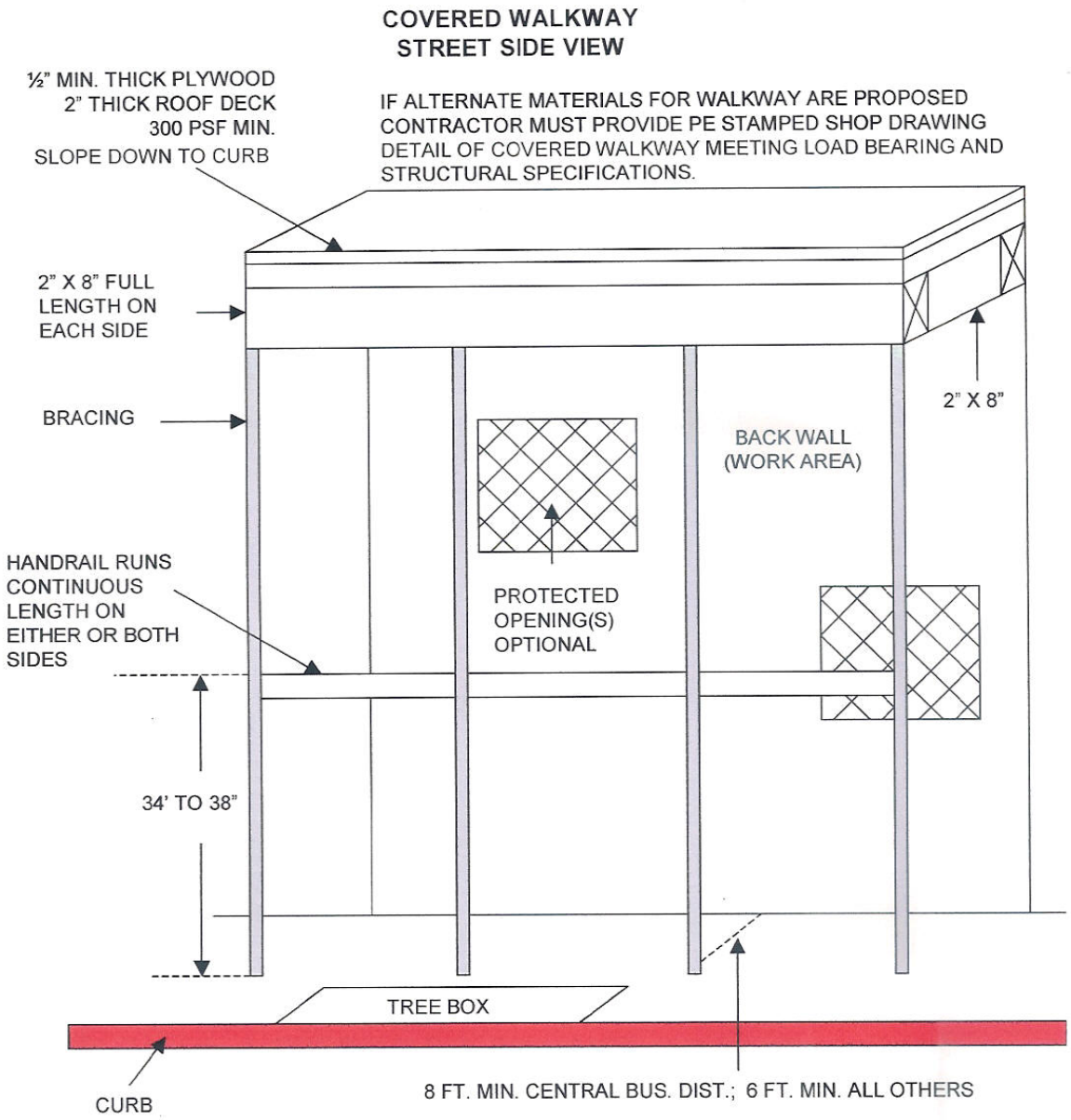

✧ IF A STRUCTURAL FLOOR IS INSTALLED THE WALKWAY MUST INCLUDE ADA-COMPLIANT CONTINUOUS RAILINGS AS PER COVERED WALKWAY STANDARDS

✧ LIGHTS (NOT SHOWN) MUST BE INSTALLED ON EITHER THE ROOF OR BACK WALL IN VANDAL-PROOF FIXTURES 8 FEET MIN. FROM THE FLOOR

COVERED WALKWAY - STREET SIDE VIEW
APPROVED BY

Ver. 05/07

COVERED WALKWAY
SIDEWALK END VIEW

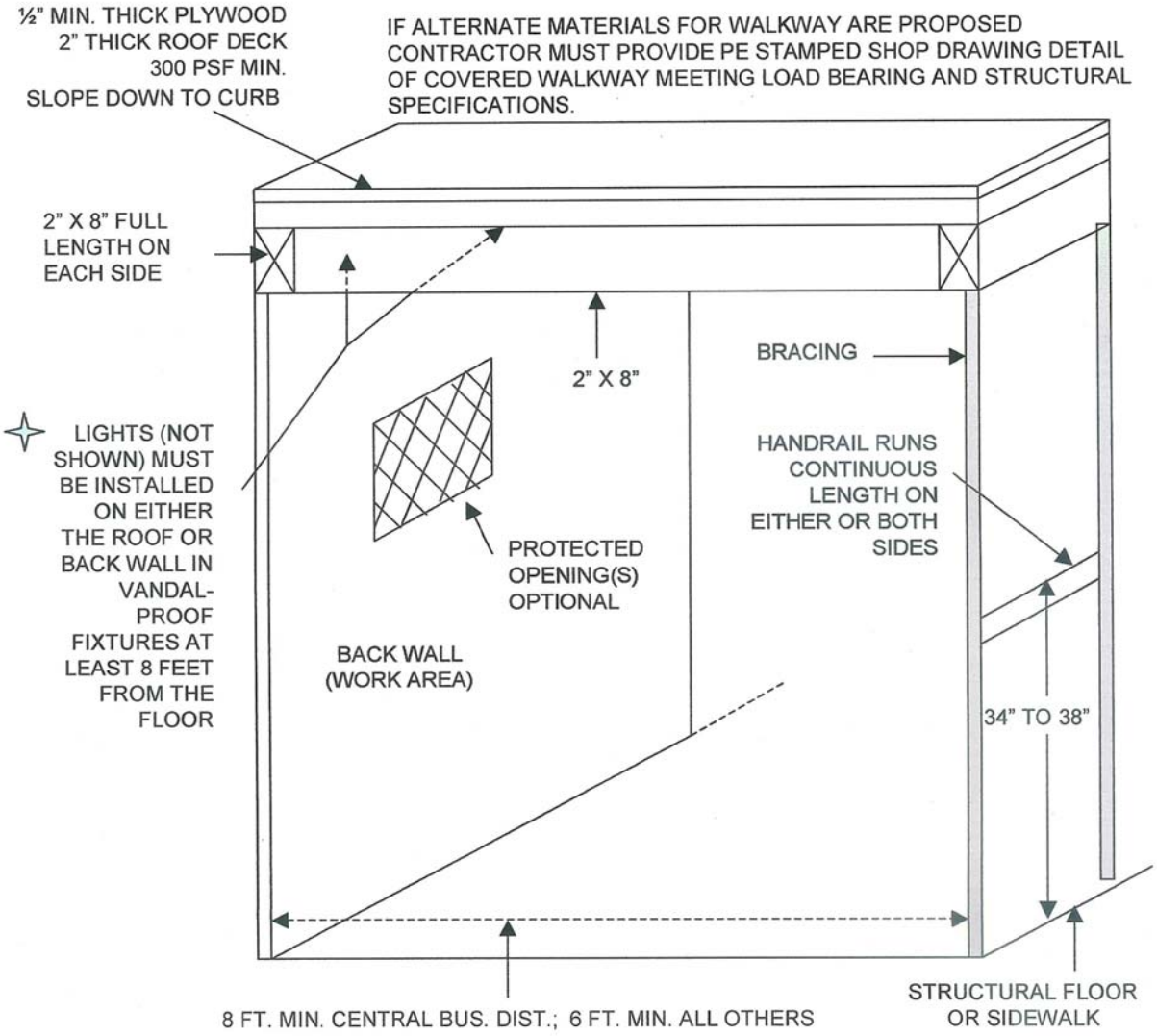

IF A STRUCTURAL FLOOR IS INSTALLED WALKWAY MUST INCLUDE ADA-COMPLIANT CONTINUOUS RAILINGS AS PER COVERED WALKWAY STANDARDS

COVERED WALKWAY - SIDEWALK END VIEW
APPROVED BY

Ver. 05/07

District Department of Transportation
Public Space Management Branch
941 North Capitol Street N.E. room 2300
Washington D.C 20002
Tel. (202)442-4670 Fax (202)442-4867 Inspections: (202) 535-2347

Issued Date: 10/16/2007 **PERMIT NO. PA 30140**

Address of work: 3531 GEORGIA AVE,NW **Ward:** 1 **Lot:** 48 **Square:** 3038

Permission Granted To: GOVT OFFICE (OPM) **Permit Fee:** $510.00

Standard Deposit No. : S	NONE Per; Mr Jackson	Deposit Amount:	$0.00
Inspection Fee No. : W		Inspection Fee Amount:	$1,536.00
Meter Fee No. : M		Meter Fee Amount:	$0.00
Streetlight Deposit No. : S		Deposit Amount:	$6,000.00
Wet Utilities Deposit No. : S	4087	Deposit Amount:	$6,000.00

Permission is hereby granted to the entity named above to perform the work described herein at the address shown above in strict accordance with all conditions stated on all pages of this permit as well as on the application submitted.

Type of Permit:

Under Ground Utility: Sheeting Shoring, Excavation

Detailed Scope of Work and Conditions *:

SHEETING /SHORING, BRACING & EXCAVATION CONSTRUCTION OF ONE STORY BELOW GRADE DRIVING PILES AND LAGGING ON GEORGIA AVENUE N.W THE ATTACHED PLANS AND CONDITIONS ARE PART OF THIS PERMIT A $6,000.00 DOLLAR DEPOSIT IS REQUIRED FOR THE SECURITY OF (TWO) STREETLIGHT POST ONE ON GORGIA AVENUE ONE ON NEWTON STREET N.W. A $1,536.00 USER'S FEE IS REQUIRED. THIS PERMIT WILL EXPIRE DURATION OF PROJECT.

** Approved Traffic Control Plan is a part of this permit and must be on site at all times and visible from public space. New TCP is required every six months.
** Must call Permit Office before start of work for delivery of ORIGINAL PERMIT @ 202-535-2347. Allow three business days for delivery.
** This permit must be on site at all times and visible from public space.
* Only vehicles registered as commercial vehicles directly needed for construction are permitted to be parked in the area defined by this permit.
* No work is permitted before 7:00am or after 7:00pm Monday through Saturday.Only a DDOT Traffic Work Zone technician can approve after hour work.
* All work must comply with all District regulations and statutes. Violation may result in revocation of this permit.
* No crossing of sidewalk with trucks.
* No sales permitted in public space.
* Must follow approved site plan without deviation.
* This permit is revocable at any time at the discretion of MPD and DDOT.
* Extended restoration may be required. Level of restoration to be determined by DDOT. A DDOT Public Space Construction Inspector must authorize any restoration before work begins. Please call (202) 535-2347.
* All wet utility deposits will be returned after two years of satisfactory restoration.
* No blocking of alley with trucks or construction equipment.
* No work in public space permitted during official DC government holidays.
* For return of deposits please call the SIOD Office at (202) 645-7050 to schedule an inspection.
* Renewals require all prior public space permits to be on premise.
* Permit holder responsible for obtaining any additional permits required by statute or regulation including DDOE and DCRA permits.
* The attached conditions for underground work are a part of this permit
* No change to size, layout, design or materials from the approved plans is allowed.
* Permit holder is responsible for all damage to public space as a result of work done under this permit.
* Prior to street and alley closures permittee must contact local fire station.
* Trash containers are to be placed in curb lane at the front of this property

Permit Effective: 12/3/2007

Permit Expires: 12/3/2008

Donna Thompson
Civil Engineering Technician

Emeka Moneme
Director

KONE

RECEIVED
JUL 18 2007
Lance Bailey and Associates

KONE Elevator Site Requirements

Guide for General Contractors

CONSTR-00-0775 (2006-09-29)

Table of contents

Introduction 5

Site requirements checklist 7

Detailed explanations for site requirements checklist
- Safety 9
- General 13
- Pit 14
- Hoistway 16
- Machine room 23

Pre-inspection checklist 27

Detailed illustrations for pre-inspection checklist
- Safety 31
- General 32
- Pit 33
- Hoistway 34
- Machine room 35
- Machine-room-less applications with integral/adjacent control space 36
- Machine-room-less applications with remote control space 36

Local requirements 37

Approvals and version history 38

Introduction

On behalf of KONE Inc. and our associates, I'd like to thank you for considering KONE to provide your vertical transportation equipment.

The success of your project is important to KONE, and we look forward to working with you to complete this project safely, with the highest degree of quality, on schedule, and with minimal disruption to you and your subcontractors.

To help ensure a successful project, we've created an informational DVD along with this *KONE Elevator Site Requirements: Guide for General Contractors* to assist in answering questions and to highlight specific requirements related to the equipment installation for your project. Please take time to carefully review the information and requirements outlined in this guide, as we feel certain it will enhance your understanding of our installation process and reduce the potential for delays and/or changes arising from work outside of our scope that is integral to our process.

Additionally, we feel the checklists needed to promote a safe, code-compliant, and efficient installation are outlined in this guide and will provide useful information and give you a chance to familiarize yourself with our installation process prior to having discussions with the KONE installation team.

As a vertical transportation equipment provider, we recognize there are key milestone dates relative to equipment installation critical to each building's schedule. These activities include the following:

- Material delivery/installation start date
- Installation date for building interface components including:
  - Machine or sheave beams
  - Elevator door frames
- Date the equipment is ready for final inspection.

Our desire is to achieve each of the key milestone dates. However, it is important to remember that there are critical requirements that must be met in order for this to happen.

Our intention is to start work the day the material arrives on site. In order for this to happen, the conditions highlighted in the "KONE Site Requirements" DVD and in the "Site Requirements Checklist" found in this guide must be completed prior to KONE arrival on site.

Prior to scheduling the final adjustment and inspection, it is important that every trade has completed the elevator-related items that they are responsible for, and all items are capable of meeting the code requirements. Before inspection, review the "Pre-Inspection Checklist" (refer to sections in this guide titled "Pre-Inspection Checklist" and "Pre-Inspection Checklist Information) which notes common pre-inspection deficiencies. KONE, Inc. will not be responsible for extra costs due to code or inspection-related failures beyond our control.

Please note that the information described in this guide is based on current code interpretations. Local code may differ and will take precedence.

Your KONE installation representative will be available to answer all of your questions and clarify any concerns you may have.

Again, thank you for selecting KONE, Inc. for your project.

Site Requirements Checklist

The following requirements must be completed prior to starting the elevator installation. Once all items have been completed and checked off, place your initials next to the check box for each item and fax the completed form to the local KONE Superintendent. Upon receipt of this form, your KONE representative will contact you to discuss and schedule an installation start date.

Contract number _____

Project name_____

General contractor name (print)_____

General contractor signature _____

If you have questions, contact your KONE representative.

KONE, Inc. Superintendent_____

Phone number _____ Cell phone number _____

Safety

____ ☐ Install two (2) lifeline attachments independent of overhead hoisting beam. Each attachment to be located above top landing in front corners of hoistway, and capable of withstanding 5000-pound shock load per OSHA 29.CFR1926.502.

____ ☐ Install properly-sized, steel hoisting beam in elevator hoistway overhead. Hoist beam must run side-to-side in hoistway and be centered over main guide rails per approved KONE final layout drawings. Consult your KONE installation representative for hoist beam size. (EcoSpace applications: KONE will provide hoisting beam to be installed by others.)

____ ☐ Provide free-standing, removable OSHA approved barricades capable of withstanding 200-pound force in all directions at all entrance openings per OSHA 29.CFR1926.502.

____ ☐ Provide safe stairway access to all floors and machine rooms.

____ ☐ Provide 6-foot clear work area in front of all entrance openings per OSHA 29.CFR1926.502.

General

____ ☐ Provide adequate access into building for delivery of elevator material.

____ ☐ Provide clean, dry staging/storage area adjacent to elevator hoistway at lowest landing. Coordinate size and location of staging/storage area with KONE installation representative.

____ ☐ Provide 480/208 vac three-phase power, 220 vac single-phase power and 115 vac single-phase power of permanent characteristics for lighting and installation method tools. Consult your KONE representative for confirmation of location and type of temporary power required.

NOTE: Our elevator controllers require Wye configuration transformers. It is also the responsibility of the Purchaser to provide consistent three-phase voltages balanced within +/-10% when measured phase-phase and +/-10% when measured phase-ground. Voltage imbalance or load imbalance exceeding +/- 10% can damage elevator systems.

Pit

____ ☐ Construct elevator pit to dimensions required per approved KONE final layout drawings.

____ ☐ Provide a clean and dry elevator pit.

____ ☐ Provide a code-compliant pit ladder, location to be coordinated between KONE field personnel and General Contractor. (Not applicable for EcoSpace)

____ ☐ Hydraulic in-ground application: Provide constructed and back filled pit walls.

____ ☐ Hydraulic in-ground application: Provide 30 X 30 inch blockout located in floor per approved KONE final layout drawings for drilling purposes.

Hoistway

____ ☐ Construct hoistway to dimensions required per approved KONE final layout drawings. (tolerance –0"/+1")

____ ☐ Provide required block-outs and or hoistway penetrations for all piping, wiring, hall fixtures, and access panels per approved KONE final layout drawings.

____ ☐ Construct hoistway with entire front wall left open on all floors. Entrance walls to be constructed as door frames and sills are installed. All entrance rough openings must be aligned vertically. In addition, adequate support for door entrances must be provided at sill and header level.

____ ☐ Install guide rail inserts and or steel rail bracket attachment support as required per approved KONE final layout drawings.

____ ☐ Provide floors flush with inside of hoistway wall opening(s) for proper sill attachment at all landings.

Machine room/control space

____ ☐ Provide a completed machine room, constructed and located according to dimensions required per approved KONE final layout drawings.

____ ☐ Provide a clean and dry elevator machine room.

____ ☐ Provide a permanent or temporary machine room door that can be locked from outside.

____ ☐ Provide temporary or permanent three-phase power with fused and lockable disconnect mounted in machine room per power characteristics listed on KONE contract drawings.

____ ☐ Provide 110 volt, 20 amp power supply receptacle (GFCI protected) in machine room.

____ ☐ Provide adequate temporary or permanent lighting in machine room.

Detailed explanations for site requirements checklist

Safety

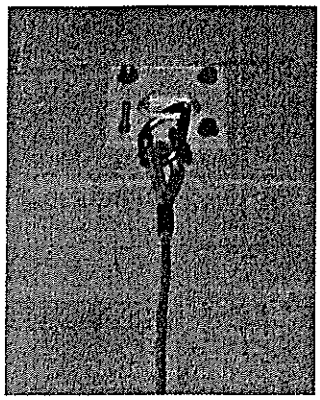

Lifeline attachment

☐ Provide two (2) lifeline attachments independent of overhead hoisting beam. Each attachment to be located above top landing in front corners of hoistway, and must be capable of withstanding a 5000 pound shock load per OSHA 29.CFR1926.502.

☐ Provide a properly-sized, steel hoisting beam in elevator hoistway overhead. Hoist beam must run side-to-side in hoistway and be centered over main guide rails per approved KONE final layout drawings. Consult your KONE installation representative for hoist beam size. (EcoSpace applications: KONE will provide hoisting beam to be installed by others.)

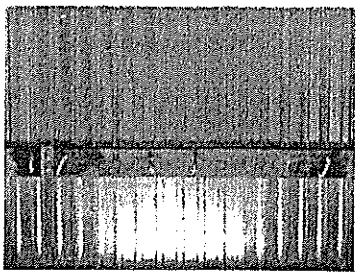

Overhead hoist beam

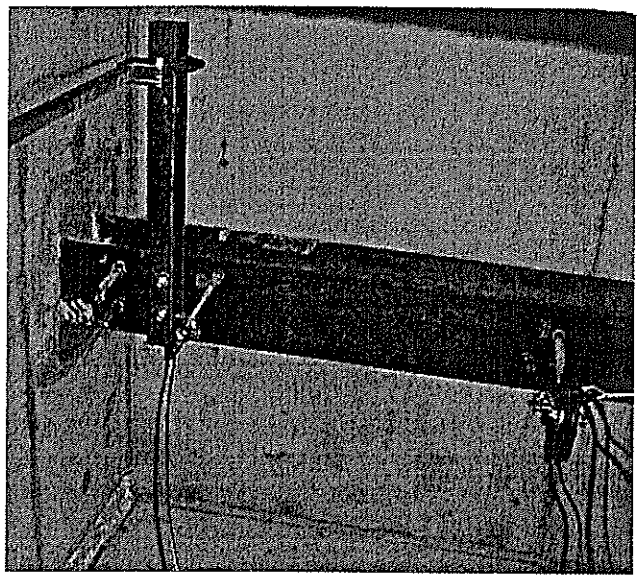

Hoist beam with hoisting equipment attachments

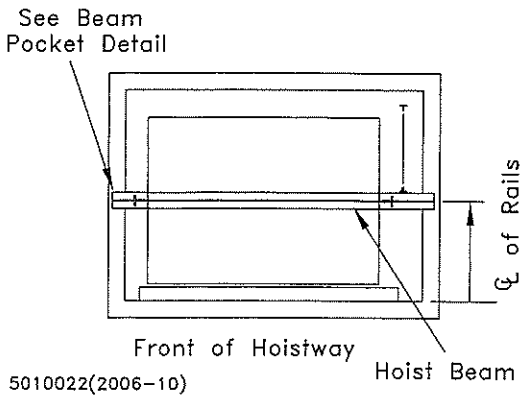

Hoist beam layout

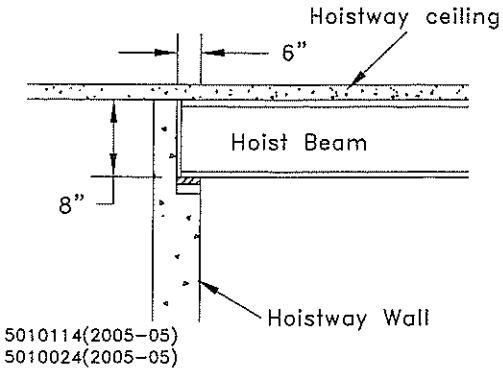

Hoist beam pocket detail

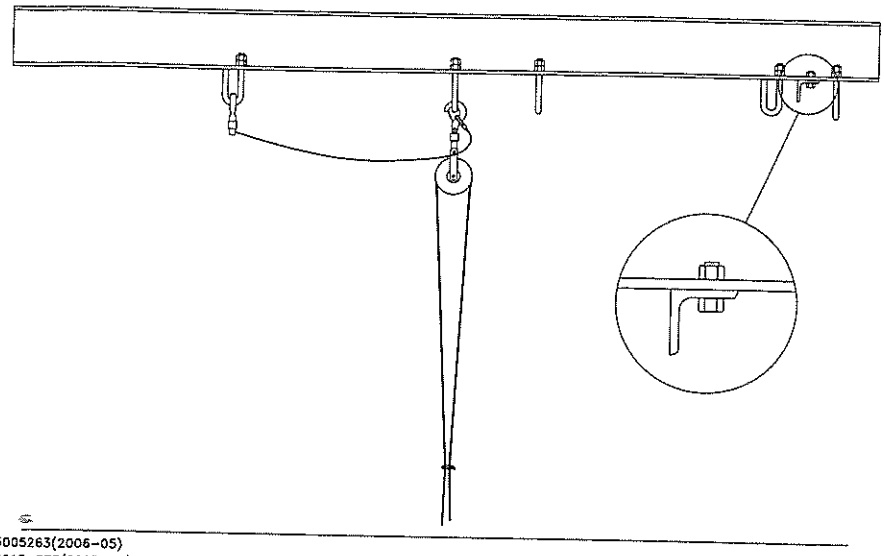

Hoist beam with hoisting equipment attachments

NOTE: Governor angle is located on machine side. Coordinate placement with your KONE representative.

☐ Provide free-standing, removable OSHA approved barricades capable of withstanding 200 pound force in all directions at all entrance openings per OSHA 29.CFR1926.502.

"Guardrail systems" or "Barricades" shall comply with the provisions set forth per OSHA regulation 29.CFR1926.502. (1) Top edge height of top rails, or equivalent guardrail system members, shall be 42 inches (1.1 m) plus or minus 3 inches (8 cm) above the walking/working level. (2) Midrails, screens, mesh, intermediate vertical members, or equivalent intermediate structural members shall be installed between the top edge of the guardrail system and the walking/working surface when there is no wall or parapet wall at least 21 inches (53 cm) high. Toe boards must contact the working or walking surface and must withstand a force of at least 200 pounds (890 N) in any outward or downward direction. (3) Guardrail systems shall be capable of withstanding, without failure, a force of at least 200 pounds (890 N) applied within 2 inches (5.1 cm) of the top edge, in any outward or downward direction, at any point along the top edge. (4) When the 200 pound (890 N) test load specified in paragraph (b)(3) of this section is applied in a downward direction, the top edge of the guardrail shall not deflect to a height less than 39 inches (1.0 m) above the walking/working level. Guardrail system components selected and constructed in accordance with the Appendix B to Subpart M of this part will be deemed to meet this requirement. (5) Midrails, screens, mesh, intermediate vertical members, solid panels, and equivalent structural members shall be capable of withstanding, without failure, a force of at least 150 pounds (666 N) applied in any downward or outward direction at any point along the midrail or other member.

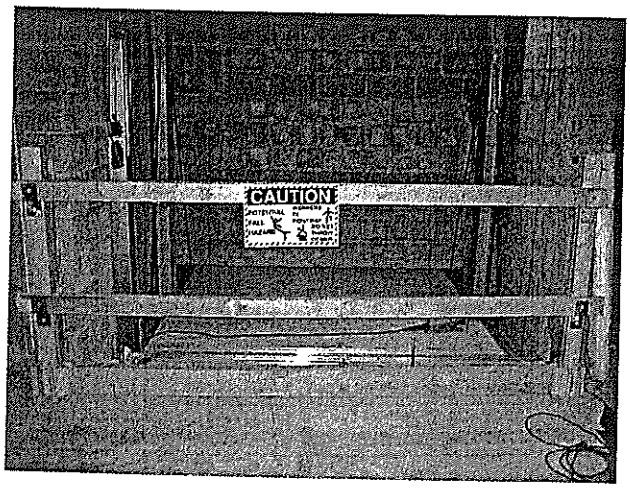

Removable barricades

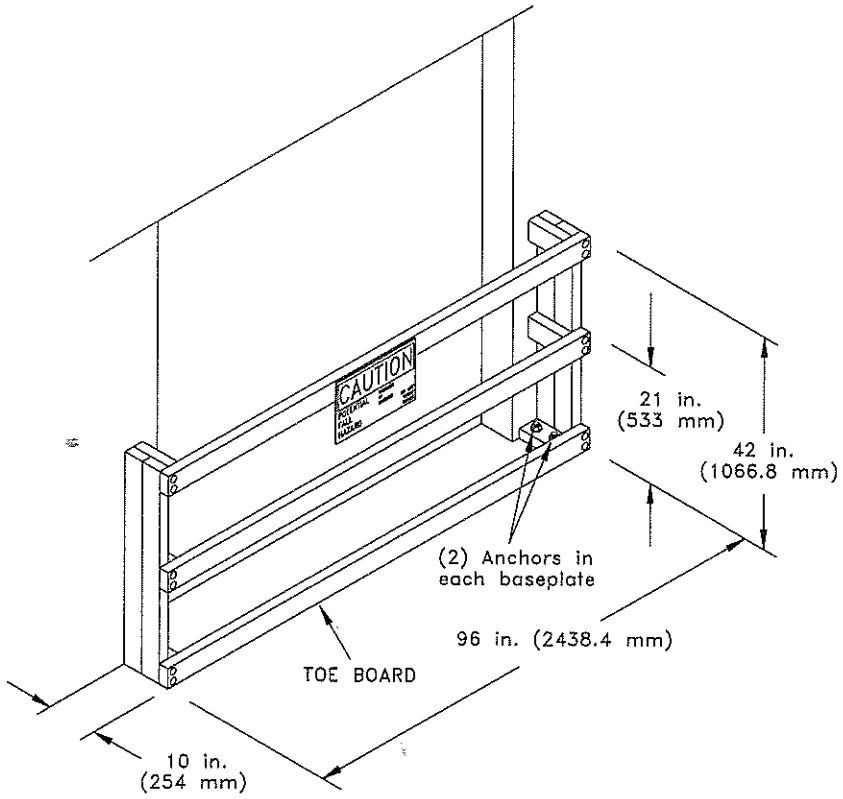

097(2003–05)

Freestanding, removable barricade

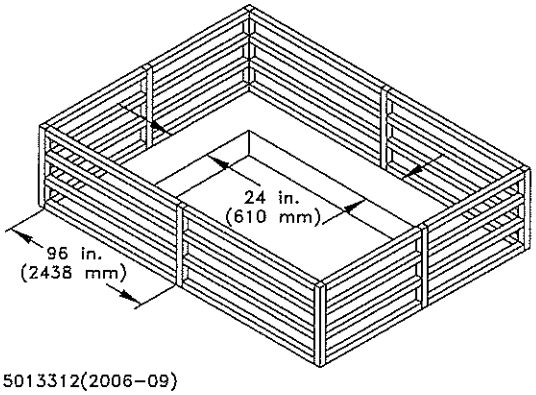

5013312(2006–09)

Barricade around four sides of open hoistway

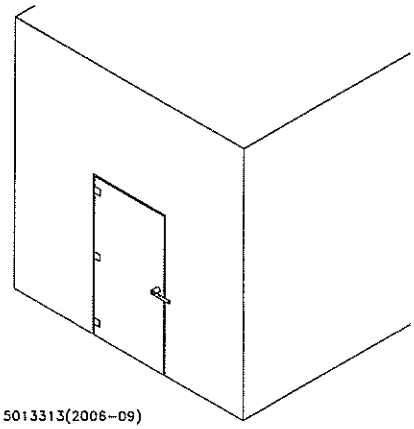

5013313(2006–09)

Locking door to hoistway required for occupied buildings

☐ Provide safe stairway access to all floors and machine rooms.

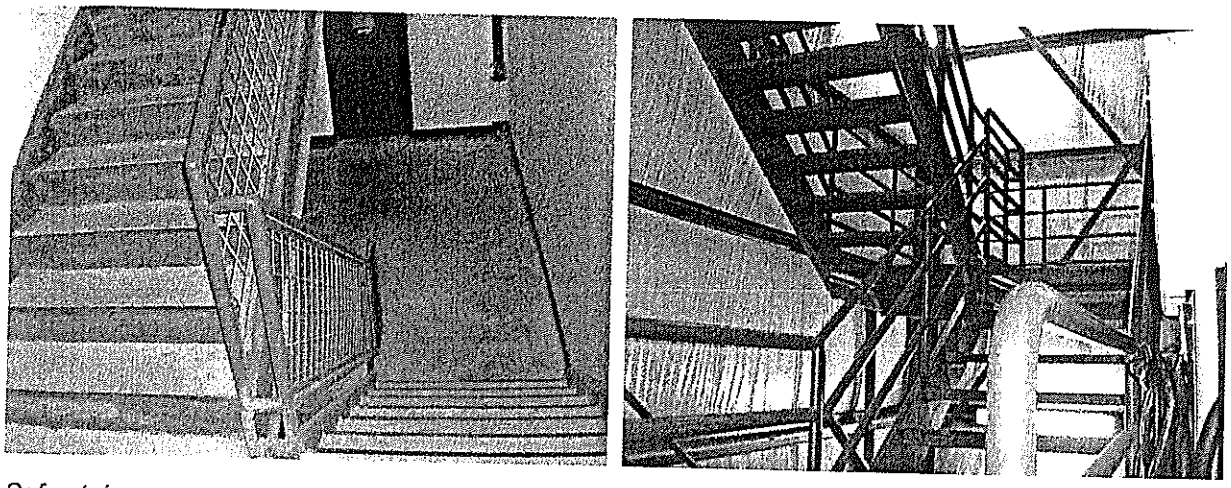

Safe stairway access

☐ Provide a 6-foot clear work area in front of all entrance openings per OSHA 29.CFR1926.502.

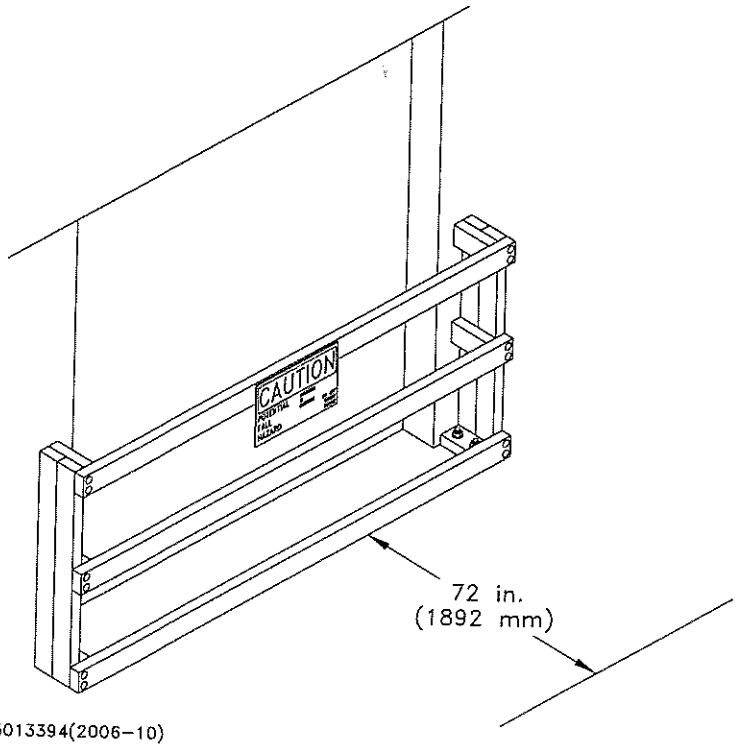

5013394(2006–10)

General

☐ Provide adequate access into building for delivery of elevator material.

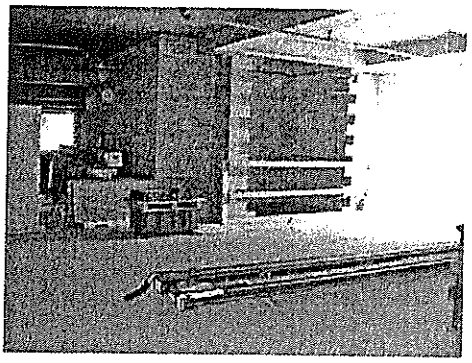

Access for delivery of material

☐ Provide clean, dry staging/storage area adjacent to elevator hoistway at lowest landing. Coordinate size and location of staging/storage area with KONE installation representative.

NOTE: Minimum dimensions listed are required for each unit to be installed.

- MonoSpace applications: minimum 20 x 20 feet per unit
- EcoSpace applications: minimum 20 x 20 feet per unit
- Hydraulic applications: minimum 20 x 20 feet per unit
- EcoSystem MR applications: minimum 30 x 30 feet per unit

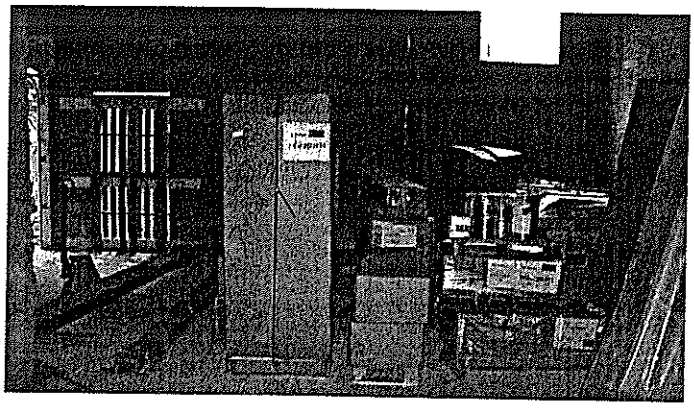

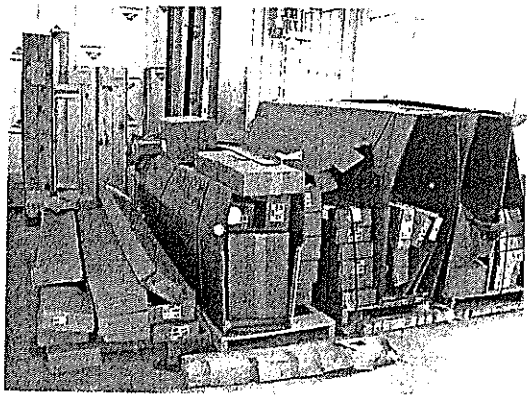

Staging/storage areas

☐ Provide 480/208 vac three-phase power, 220 vac single-phase power and 115 vac single-phase power of permanent characteristics for lighting and installation method tools. Consult your KONE representative for confirmation of location and type of temporary power required.

NOTE: Our elevator controllers require Wye configuration transformers. It is also the responsibility of the Purchaser to provide consistent three-phase voltages balanced within +/-10% when measured phase-phase and +/-10% when measured phase-ground. Voltage imbalance or load imbalance exceeding +/- 10% can damage elevator systems.

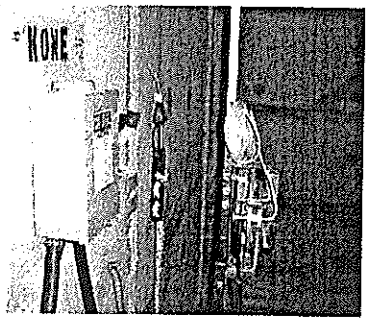

Temporary power for Tirak hoist

Pit

- ☐ Construct elevator pit to dimensions required per approved KONE final layout drawings.
- ☐ Provide a clean and dry elevator pit.

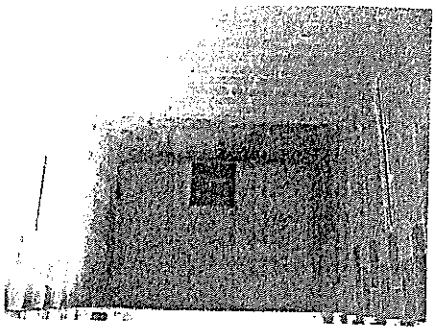

Clean dry pit

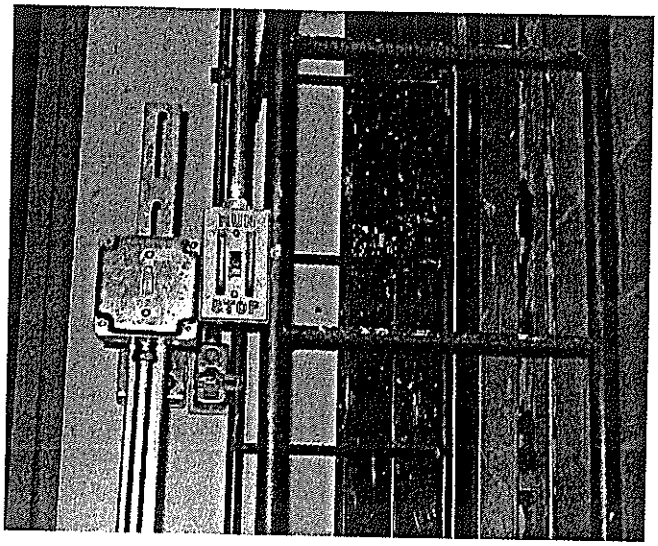

- ☐ Provide a code-compliant pit ladder, location to be coordinated between KONE field personnel and General Contractor. (Not applicable for EcoSpace)

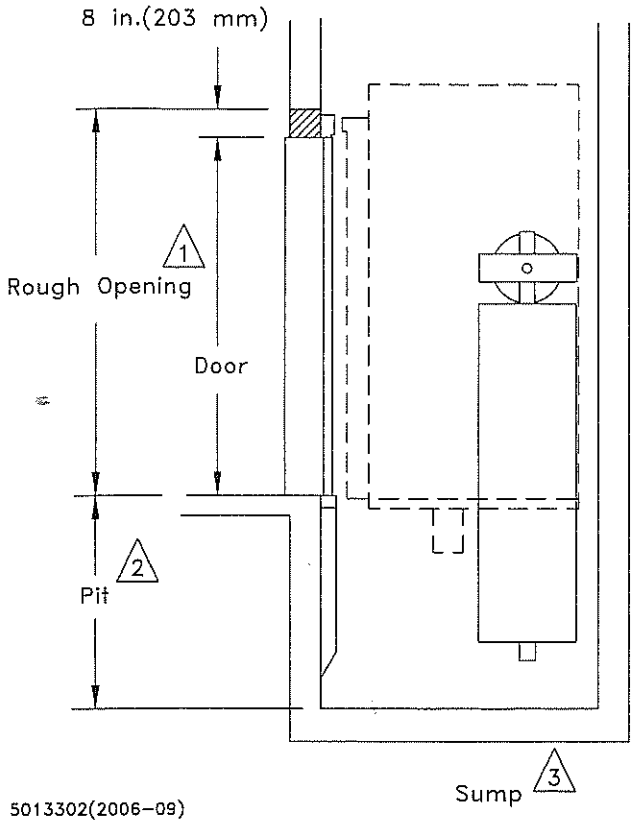

△ Notes

1 Minimum rough opening height to install entrance frames and head jamb is finished door height plus 8 inches (203 mm)

2 Verify pit depth matches approved KONE final layout drawings.

3 Sump (where required) located where it will not interfere with elevator equipment, according to KONE contract-specific drawings. (ASME A17.1 sec 8.6.4.7.4, ASME A17.1 sec 2.2.2.6)

For locations of guide rail brackets and bracket support, refer to KONE contract-specific drawings.

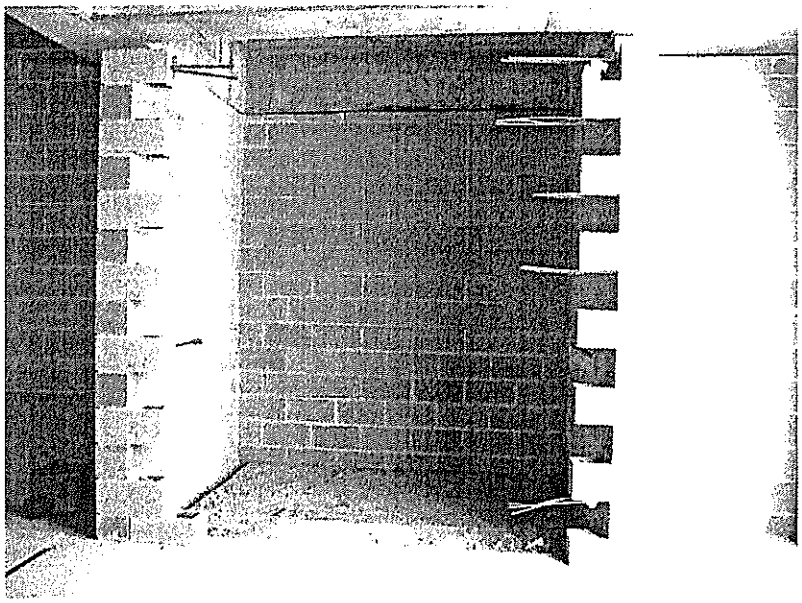

Rough opening

- ☐ Hydraulic in-ground application: Provide constructed and back filled pit wall.
- ☐ Hydraulic in-ground application: Provide 30 X 30 inch blockout located in floor per approved KONE final layout drawings for drilling purposes.

Hoistway

☐ Construct hoistway to dimensions required per approved KONE final layout drawings. (tolerance –0"/+1")

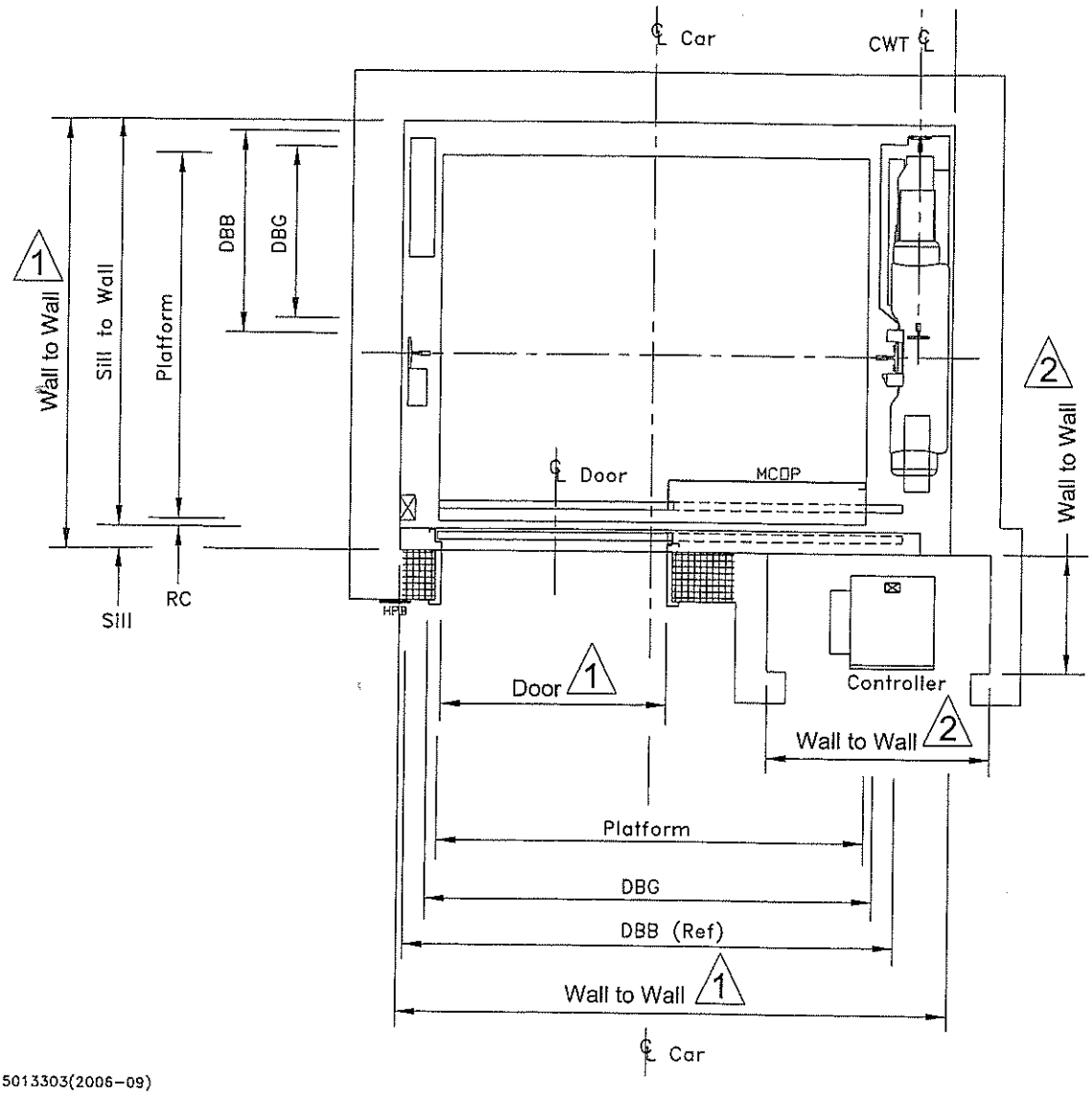

5013303(2006–09)

Hoistway layout

△ Notes

1 Critical dimensions required per approved KONE final layout drawings. (tolerance –0"/+1")

2 Control space typically located at top landing. Verify location on approved KONE final layout drawings.

Verify location of viewing panel, where required.

Remote controller applications:

- Verify location of governor access panel, where required.
- Verify location of manual brake release access panel.

NOTE: Manual brake release access panel has a fire-rated, self-locking (but not self-closing) 24 x 24 inch access door (by others) in hoistway wall at top landing. Access panel may be located in front wall, OR side wall, OR rear wall of hoistway, centerline 56" AFF. Locate per KONE final layouts.

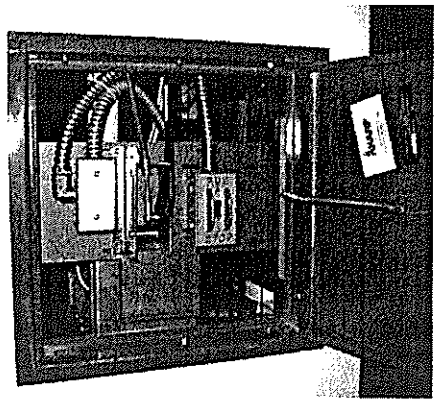

Manual brake release access panel for remote controller applications

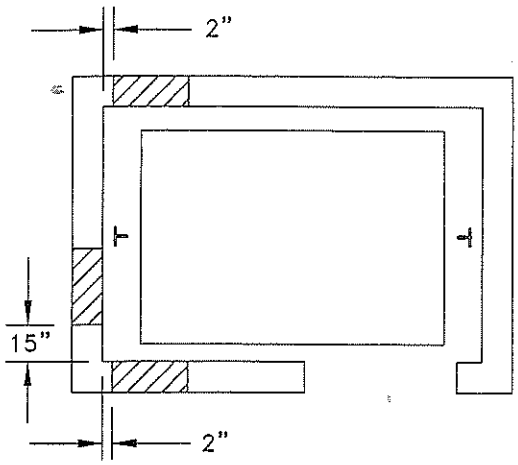

5010128(2005-05)

Three possible locations of manual brake release access panel

☐ Provide required block-outs and or hoistway penetrations for all piping, wiring, hall fixtures, and access panels per approved KONE final layout drawings.

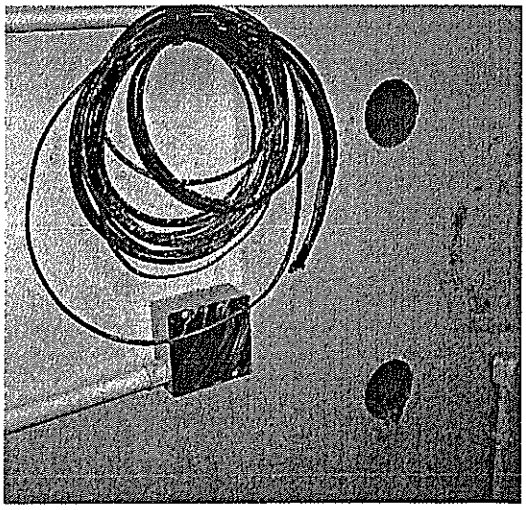

Blockouts for piping

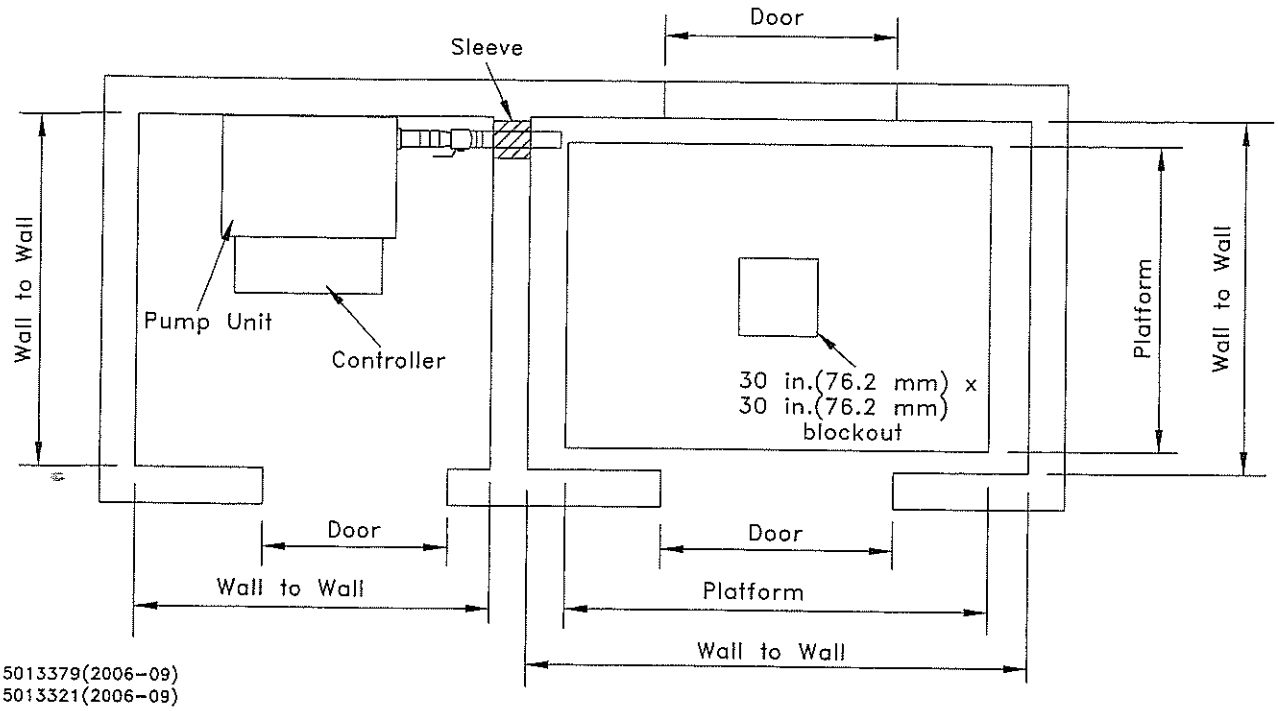

Hydraulic elevator pit

- ☐ Construct hoistway with entire front wall left open on all floors. Entrance walls to be constructed as door frames and sills are installed. All entrance rough openings must be aligned vertically. In addition, adequate support for door entrances must be provided at sill and header level.

  NOTE: Centerline of sill angle fastener shown in illustration is located at 3-1/2 inches (89 mm) below FFE.

- ☐ Provide floors flush with inside of hoistway wall opening(s) for proper sill attachment at all landings.

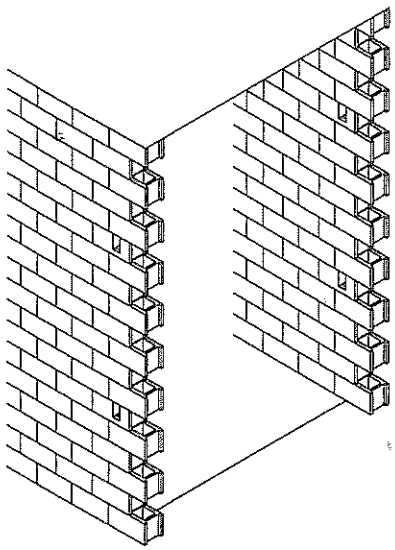

5010040(2006-09)

Front wall open before installation of equipment

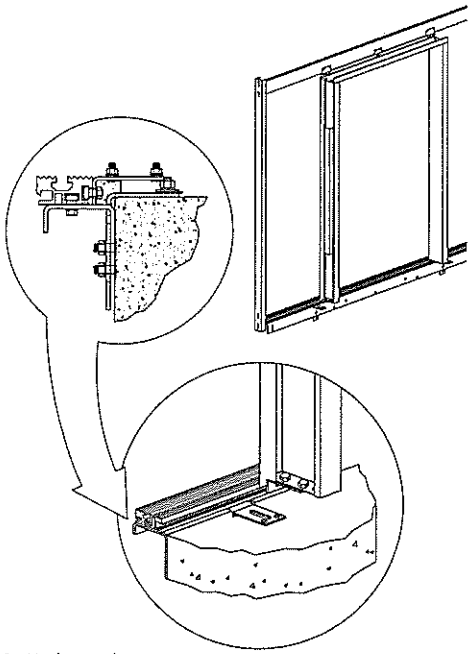

5010044(2006-09)

Sill installation

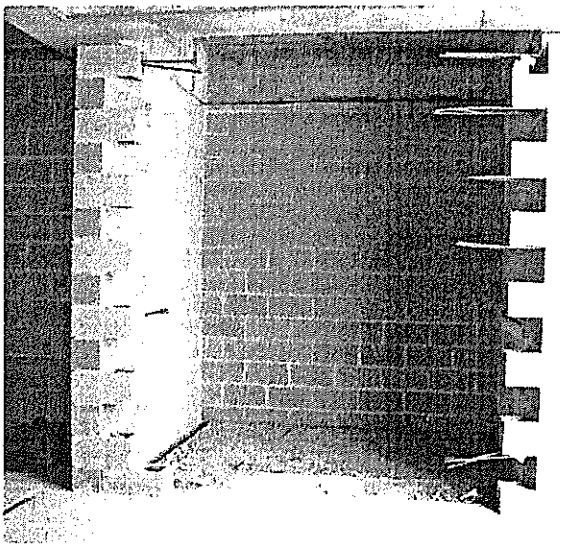

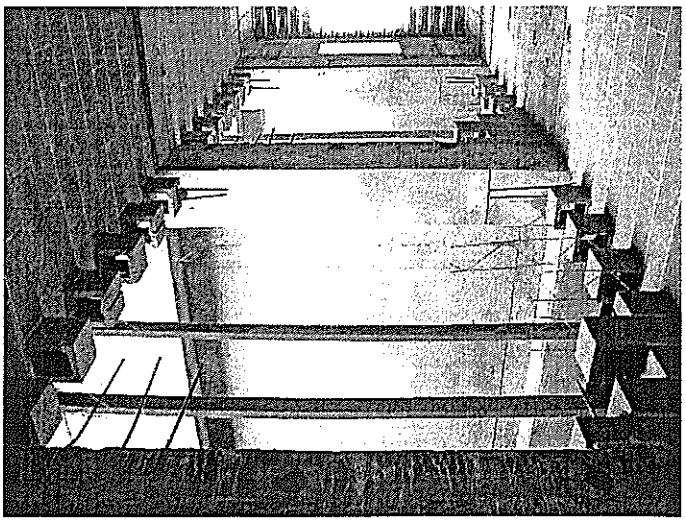

Front wall open before installation of equipment

☐ Installation of guide rail inserts and or steel rail bracket attachment support as required per approved KONE final layout drawings.

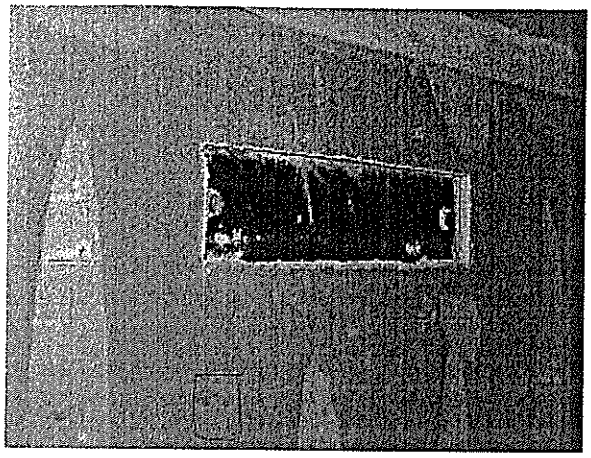

Steel plate attachment in hoistway

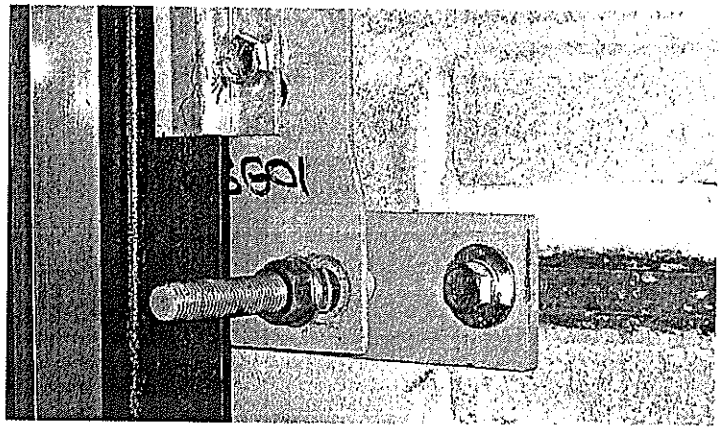

Insert with bracket and rail attached

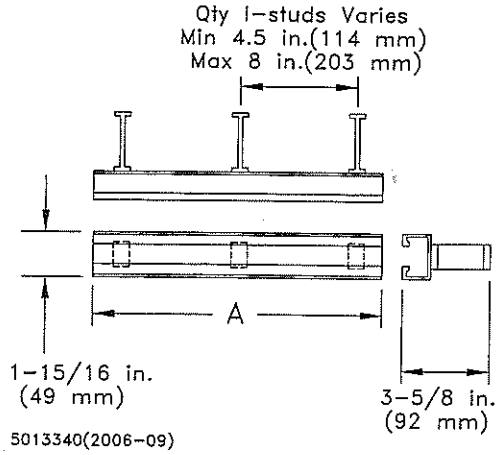

5013340(2006-09)

Bracket insert for concrete wall

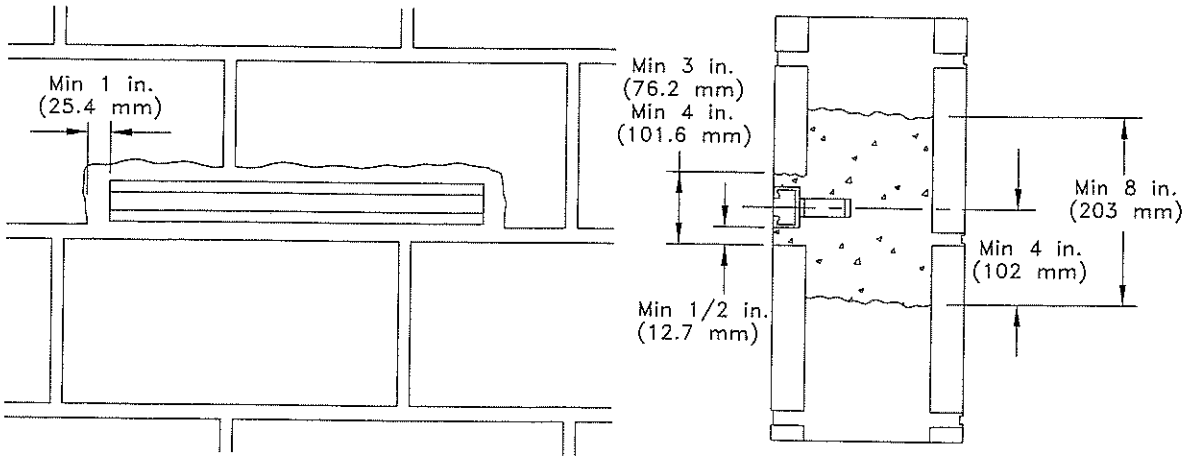

5013341(2006-09)

Placement of bracket insert in concrete wall

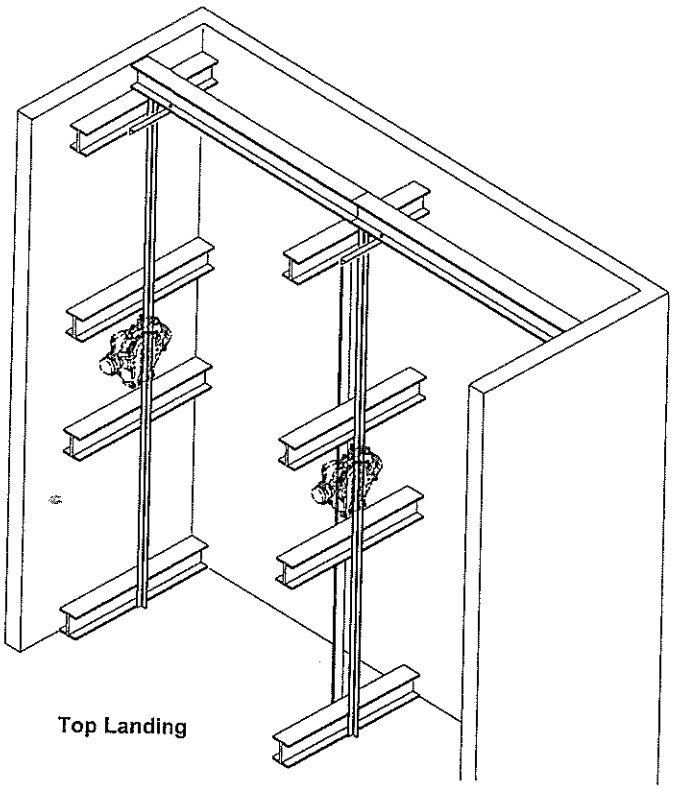

5010123(2006-10)

Rail bracket support for multiple units in hoistway overhead. Illustration is an example only; for location of machine, refer to approved KONE final layout drawings.

NOTE: For applications where multiple elevators share an overhead hoist beam, the support for the overhead hoist beam must be capable of supporting the load capacities for all elevators.

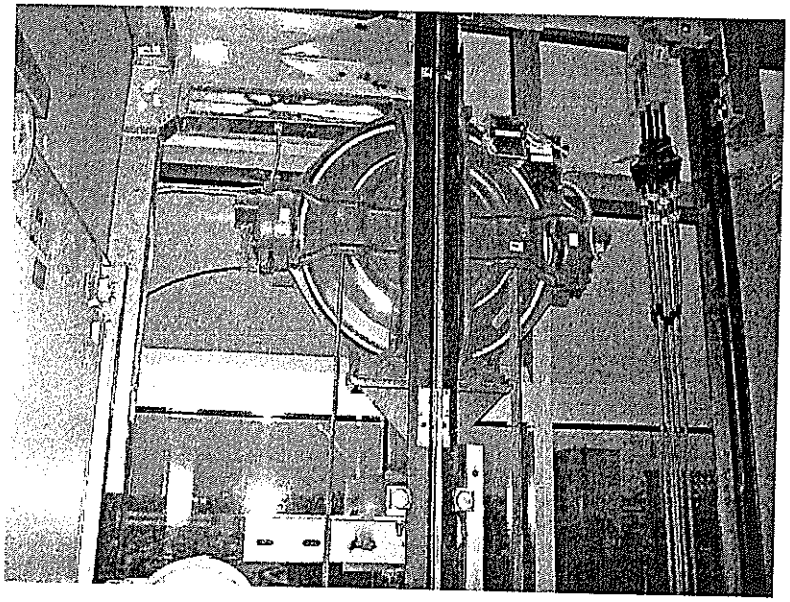

MX machine in top of hoistway

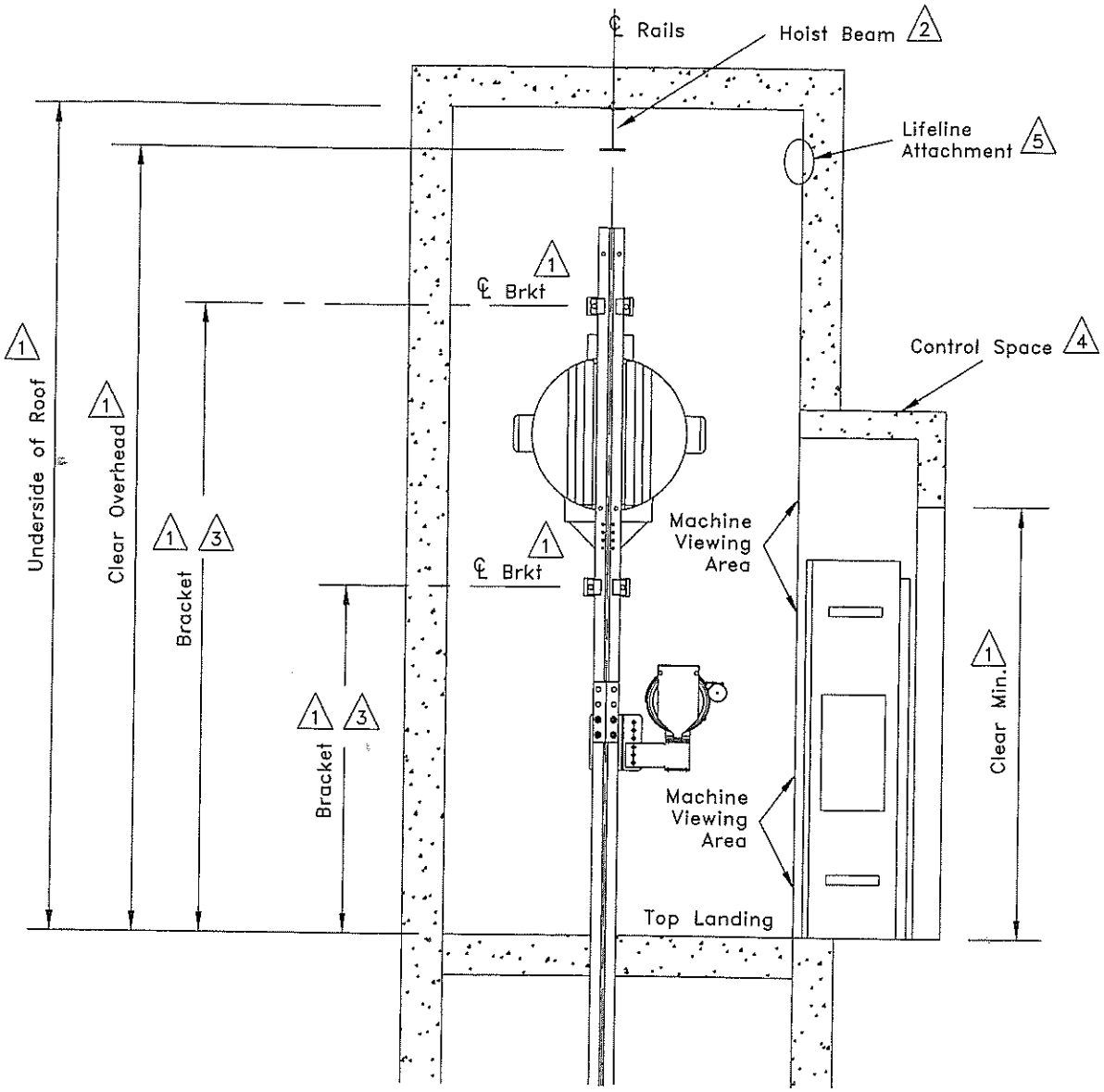

5013301(2006-09)

Top of hoistway

△ Notes

1 Critical dimensions required per approved KONE final layout drawings.

2 Hoist beam provided by KONE to be installed and cut to proper length by others. Overhead structure must be capable of supporting 10,000 pound load. Beam pockets must be sized for beam provided.

3 **Verify location and type of building support for elevator machine bracket attachments, top and bottom. Attachment points must have adequate support handling reaction loads as shown on approved KONE final layout drawings.**

4 Control space must have ceiling. Verify minimum clearance for door opening.

5 Two (2) lifeline attachments located at front of hoistway

Machine room/control space

- ☐ Provide a completed machine room, constructed and located according to dimensions required per approved KONE final layout drawings.
- ☐ Provide a clean and dry elevator machine room.
- ☐ Provide a permanent or temporary machine room door that can be locked from the outside.
- ☐ Provide temporary or permanent three-phase power with fused and lockable disconnect mounted in machine room per power characteristics listed on KONE contract drawings.

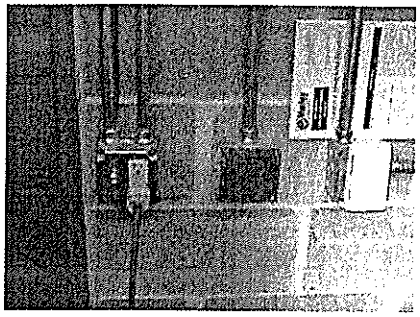

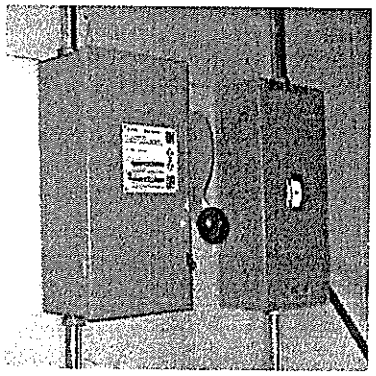

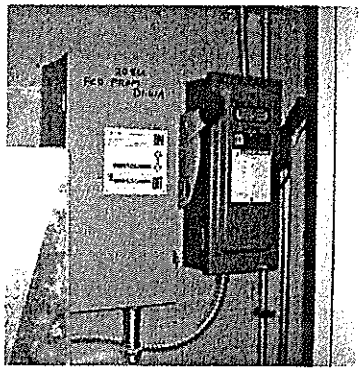

- ☐ Provide 110 volt, 20 amp power supply receptacle (GFCI protected) in machine room.
- ☐ Provide adequate temporary or permanent lighting in machine room.

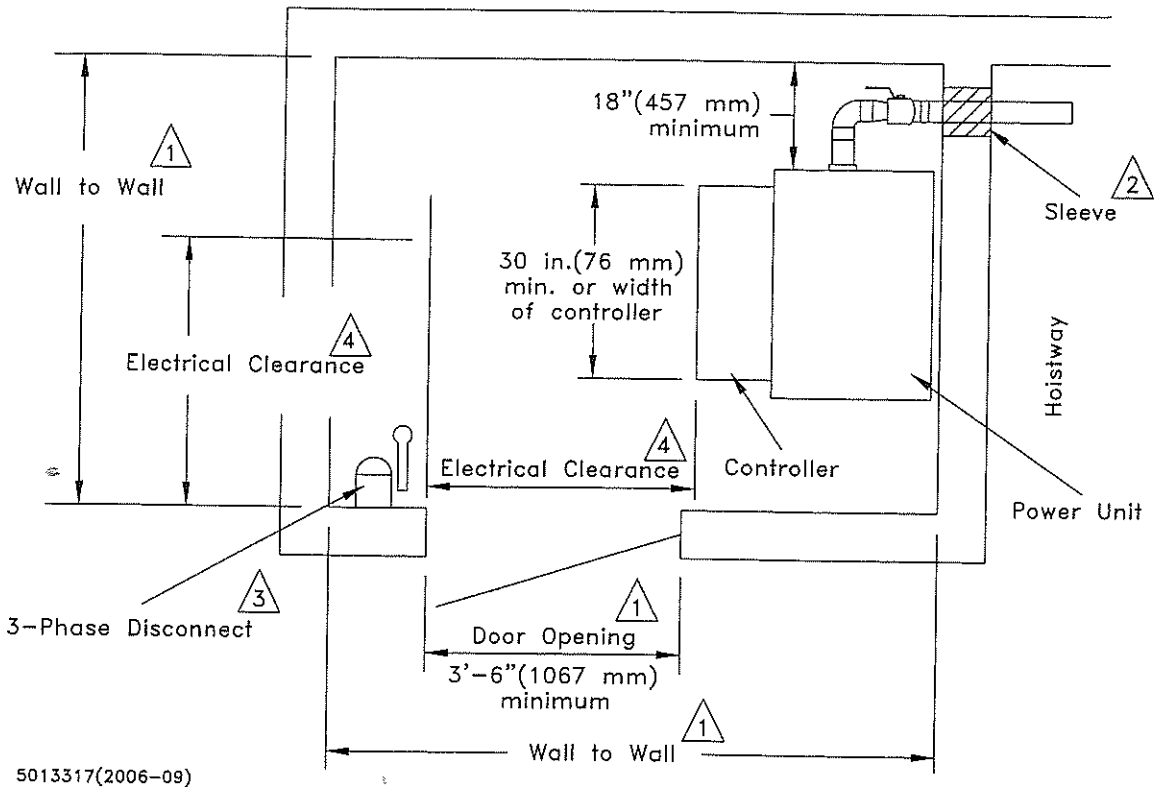

Hydraulic machine room

△ Notes

1 Critical dimensions required per approved KONE final layout drawings.

2 Verify sleeve location for concrete walls.

3 Disconnect should be fused and lockable and placed according to KONE approved layout drawings

4 Electrical clearance dimension should be a minimum of 42 inches (1067mm) or 48 inches (1219 mm) if facing exposed live parts.

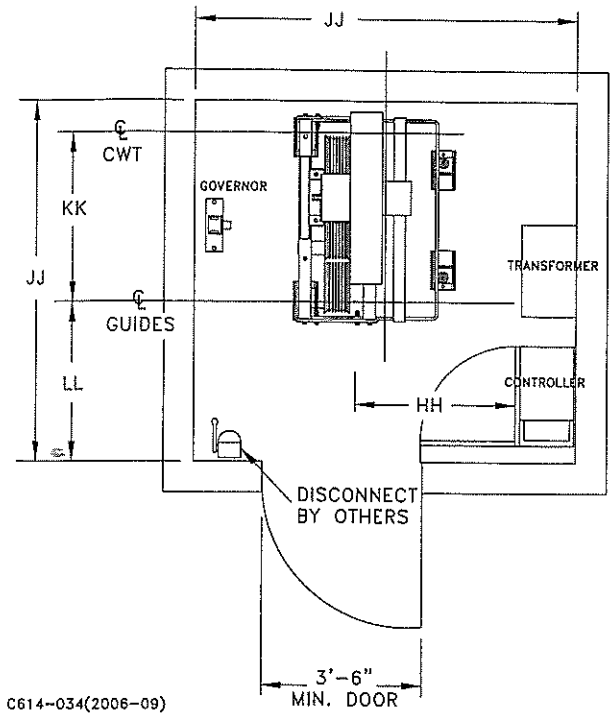

Traction EcoSystem MR machine room

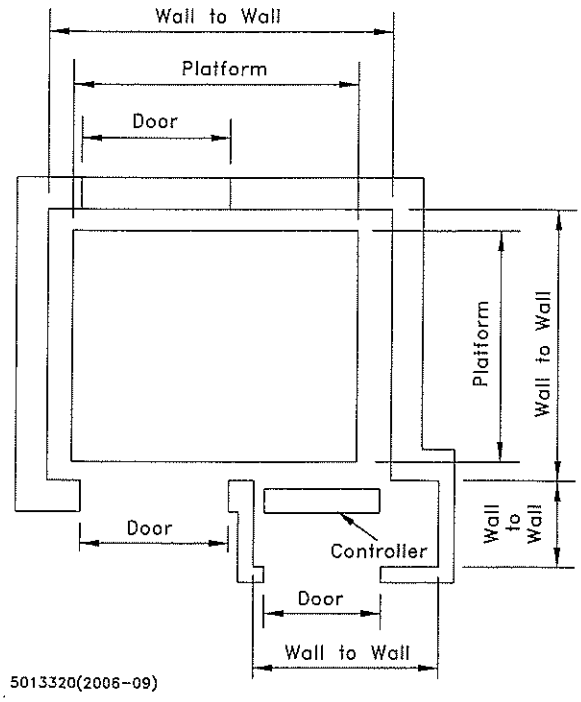

Traction EcoSpace integral control space

HH dimension - Electrical clearance dimension should be a minimum of 42 inches (1067mm) or 48 inches (1219 mm) if facing exposed live parts.

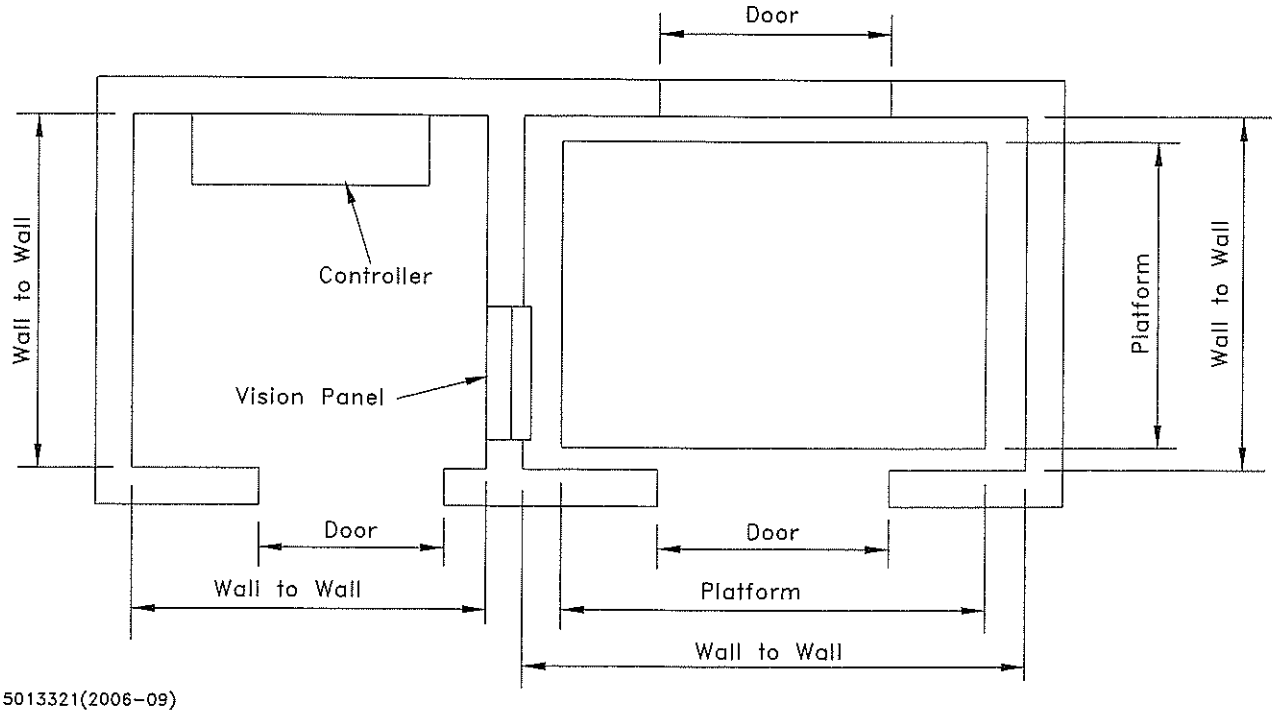

Traction EcoSpace adjacent control space

Pre-inspection checklist

The following requirements MUST BE completed prior to starting the elevator adjusting process. Once all items have been completed and checked off, place your initials next to the check box for each item and fax the completed form to the local KONE Superintendent. Upon receipt of this form, your KONE representative will contact you to discuss and schedule final adjusting and inspection date.

Contract number _____

Project name_____

General contractor name (print)_____

General contractor signature _____

If you have questions, contact your KONE representative.

KONE, Inc. Superintendent_____

Phone number _____ Cell phone number _____

Safety

____ ☐ Live, dedicated phone line to controller (ASME A17.1 sec 2.27.1.1.3)

ASME A17.1 Safety Code for Elevators and Escalators requires two-way communication - an elevator phone - between your elevator and a location that is staffed 24 hours a day and accessible to authorized emergency personnel so appropriate response can be taken in the event of an entrapment/emergency situation.

KONE can monitor your elevator phone using our KRMS Voice Link, which is KONE's remote monitoring system for elevator phones, providing the following benefits:

- Direct access to KONE's 24/7/365 Service Center, permanently staffed with Service Center Agents trained and experienced to handle entrapment and emergency situations.
- Dedicated incoming emergency elevator phone lines that ensure emergencies receive top priority.
- Immediate personal voice contact that reassures elevator passengers that help is on the way.
- An established communications network that ensures a technician is immediately dispatched to your elevator.

Please consult your local KONE supervisor for additional information regarding KONE's KRMS Voice Link SERVICE.

____ ☐ Smoke detectors and fire operation (ASME A17.1 sec 2.27.3.2, NFPA 72)

- Smoke detector required in each elevator lobby
- Smoke detector required in machine room
- Smoke detector required in hoistway, if hoistway is sprinklered
- A normally closed dry set of contacts is required from smoke detectors in all elevator lobbies except main floor lobby to the controller
- A normally closed dry set of contacts is required from main lobby smoke detector to controller
- A normally closed dry set of contacts is required from machine room smoke detector to controller
- A normally closed dry set of contacts is required from hoistway smoke detector to controller, if hoistway is sprinklered
- Verify designated main fire return floor
- Verify alternate fire return floor

____ ☐ Heat detectors and "shunt-trip operation" when sprinklers are to be provided in machine room or hoistway (ASME A17.1 sec 2.8.2.1.2, NFPA 13 sec 4-13.5, ASME A17.1 sec 2.8.2.3.1, ASME A17.1 sec 2.8.2.3.2, NFPA 72)

____ ☐ Provide the following when using emergency power generator:
- Normally open dry contact from transfer switch to controller. Contacts close to signal emergency power.
- Normally open dry contacts to controller to give 30 second pre-signal prior to transfer switch change.

____ ☐ Emergency battery lowering device, when used, requires a dry set of contacts from mainline disconnect switch to controller. Contacts must close when disconnect is closed and open when disconnect is open.

General

____ ☐ Non-elevator related piping and equipment is prohibited in machine room or hoistway (ASME A17.1 sec 2.8.1, ASME A17.1 sec 2.8.2)

____ ☐ All electrical branch circuits/disconnects labeled (NFPA 70 article 620.54 / 620.53 / 620.51d)

____ ☐ Lobby walls finished so elevator hall fixture faceplates may be installed

____ ☐ Permanent elevator lobby flooring

____ ☐ Permanent elevator lobby ceiling

____ ☐ Permanent elevator lobby lighting, 10 foot-candles minimum at sill (ASME A17.1 sec 2.11.10.2)

____ ☐ Finished elevator cab flooring. Owner must provide certification that flooring meets flame spread and smoke density requirements. (ASME A17.1 sec 2.14.2.1)

____ ☐ Owner-supplied elevator cab wall enclosures, when present. Owner must provide certification that owner-supplied elevator interior finishes meet flame spread and smoke density requirements. (ASME A17.1 sec 2.14.2.1, ASME A17.1 sec 2.14.1.8, ASME Z97.1)

Pit

____ ☐ Pit ladder installed per approved KONE final layout drawings (ASME A17.1 sec 2.2.4.2)

____ ☐ Pit light providing 10 foot-candles minimum (ASME A17.1 sec 2.2.5.1 / 2.2.5.2, NFPA 70 article 620.24) and separate circuit for lighting and receptacle(s) (NFPA 70 article 620.24[a])

____ ☐ Duplex GFCI type receptacle (NFPA 70 article 620.85) and separate circuit for lighting and receptacle(s) (NFPA 70 article 620.24[a])

____ ☐ Drain with non-combustible cover or permanently mounted sump pump (ASME A17.1 sec 8.6.4.7.4, ASME A17.1 sec 2.2.2.6)

____ ☐ Non-GFCI-protected single receptacle for sump pumps (NFPA 70 article 620.85)

____ ☐ In-ground hydraulic applications: grouting and patching of hydraulic in-ground cylinder and partial encasement of pit channels

Hoistway

____ ☐ All offsets or ledges within hoistway greater than 4 inches tapered to not less than 75 degrees (ASME A17.1 sec 2.1.6.2)

____ ☐ All holes around piping and structure penetrations in hoistway filled to maintain fire rating (NFPA 70 article 300.21)

____ ☐ Grouting and patching of entrance sills, entrance frames, hall fixture push button boxes, and signal fixtures

____ ☐ Hoistway venting (IBC sec 3004.1)

Machine room

____ ☐ Minimum 10-pound, ABC-type fire extinguisher (ASME A17.1 sec 8.6.1.6.5)

____ ☐ Self-closing, self-locking machine room door (ASME A17.1 sec 2.7.3.4.1)

____ ☐ Safe and convenient access to machine room (ASME A17.1 sec 2.8.1, ASME A17.1 sec 2.7.3)

____ ☐ Permanent electric light, 19 foot-candles minimum (ASME A17.1 sec 2.7.5, NFPA 70 article 620.23)

____ ☐ Duplex GFCI type receptacle (NFPA 70 article 620.85) and separate circuit for lighting and receptacles (NFPA 70 article 620.23)

____ ☐ Separate 115 VAC 15 amp branch circuit for car lighting/ventilation (NFPA 70 article 620.22) fused and lockable disconnect (NFPA 70 article 620.22 and 620.53), powered by building emergency power system, when applicable

____ ☐ Separate 115 VAC 15 amp branch circuit for hoistway power, when specified, powered by building emergency power system, when applicable

____ ☐ Separate 115 VAC 15 amp branch circuit for KGC (KONE Group Control), when specified, powered by building emergency power system, when applicable

____ ☐ Temperature 55-90 degrees Fahrenheit and humidity 85% non-condensing maximum (ASME A17.1 sec 2.7.5.2)

____ ☐ All holes around piping and structure penetrations in machine room filled to maintain fire rating (NFPA 70 article 300-21)

Machine-room-less applications with integral/adjacent control space

NOTE: For machine-room-less applications, adjacent room or integral control space must be on the top landing and on the same side as the machine. Anything else is considered a remote control space option.

____ ☐ Illumination equivalent to 19 foot-candles at machine (ASME A17.1s-2005 sec 2.7.9.1)

____ ☐ Light switch located in control space

____ ☐ GFCI type receptacle located at machine

Machine-room-less applications with remote control space

NOTE: For machine-room-less applications, adjacent room or integral control space must be on the top landing and on the same side as the machine. Anything else is considered a remote control space option.

____ ☐ Illumination equivalent to 19 foot-candles at machine (ASME A17.1s-2005 sec 2.7.9.1)

____ ☐ Light switch located at manual brake release location and may also be required in control space per local jurisdiction

____ ☐ Lockable, self-closing, fire-rated brake release access panel door located per approved KONE final layout drawings (ASME A17.1 sec 2.7.3.4.6)

____ ☐ Governor access panel may be required by local jursidiction

Detailed illustrations for pre-inspection checklist

Safety

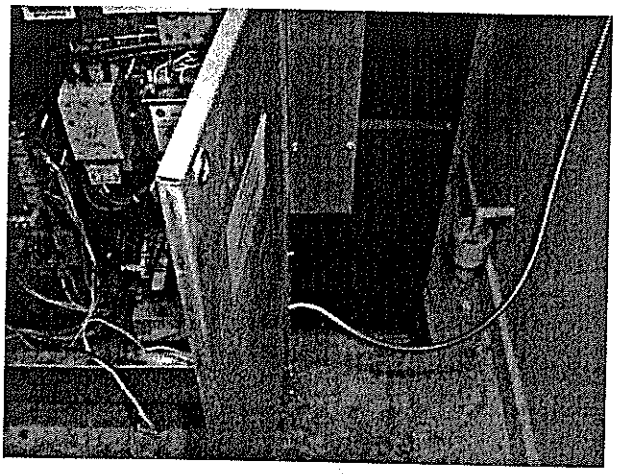

Phone line to controller

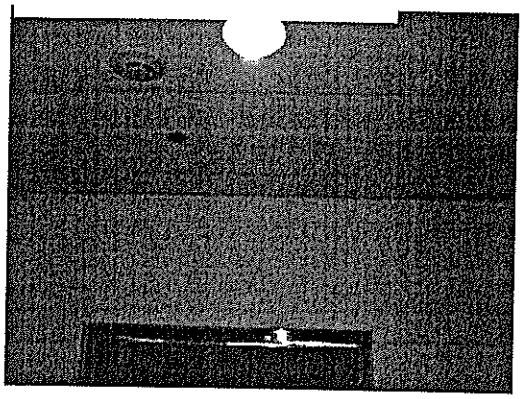

Elevator lobby smoke detector

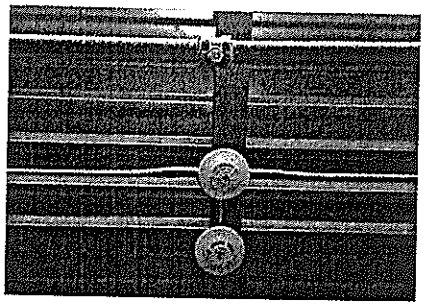

Machine room smoke detectors

Shunt trip disconnect

General

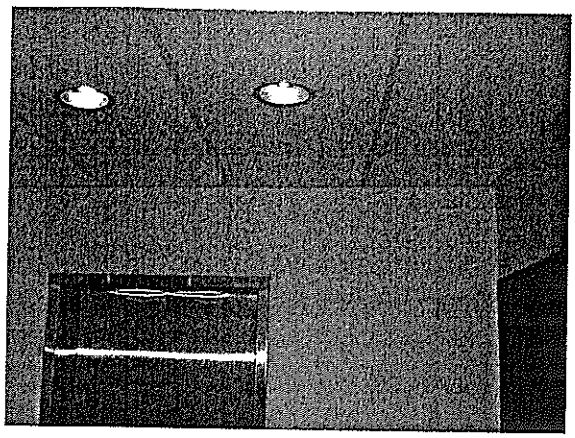

Finished lobby ceiling light

Finished front wall

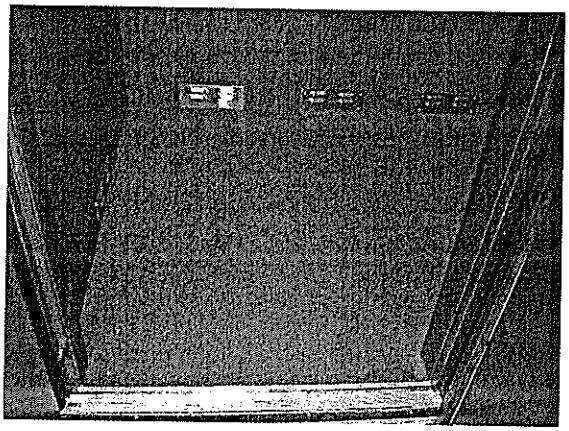

Finished cab flooring

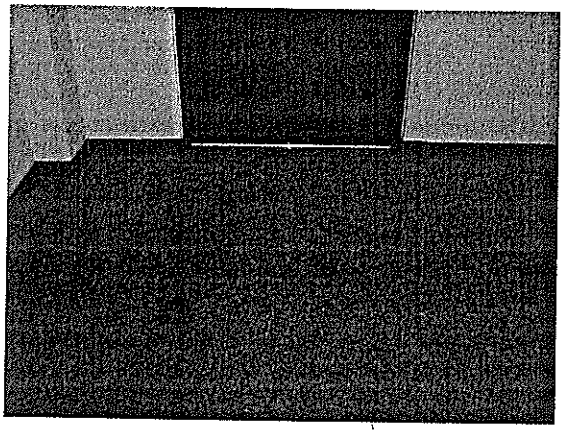

Elevator lobby flooring

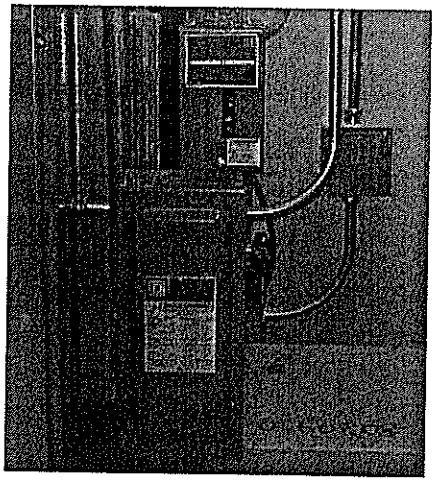

Disconnects labeled

Pit

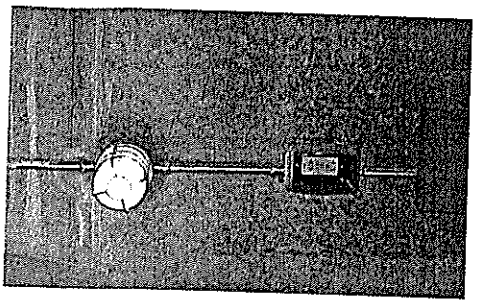

Pit light and receptacle

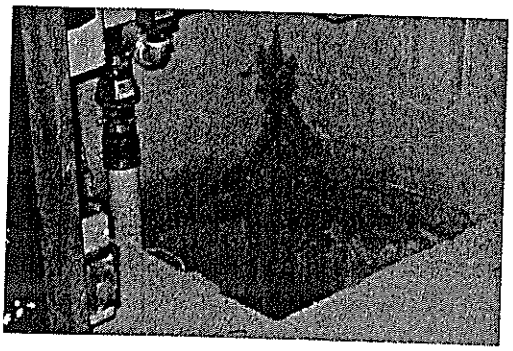

Sump (sump shown without cover for illustrative purposes; sumps should ALWAYS be covered)

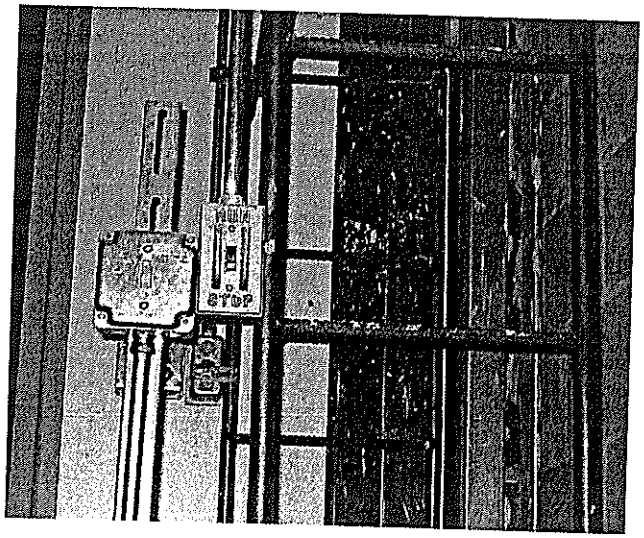

Pit ladder, light switch, stop switch

Hoistway

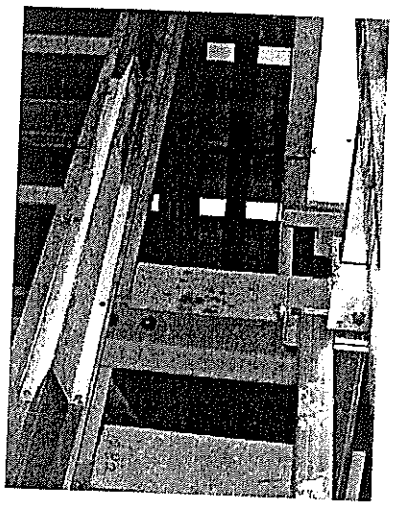

Beveled ledge in hoistway

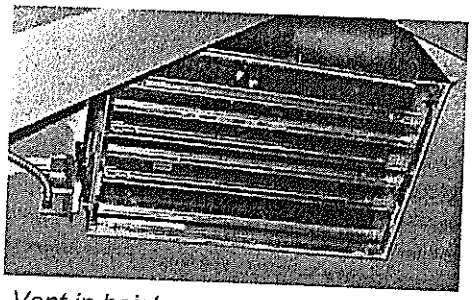

Vent in hoistway

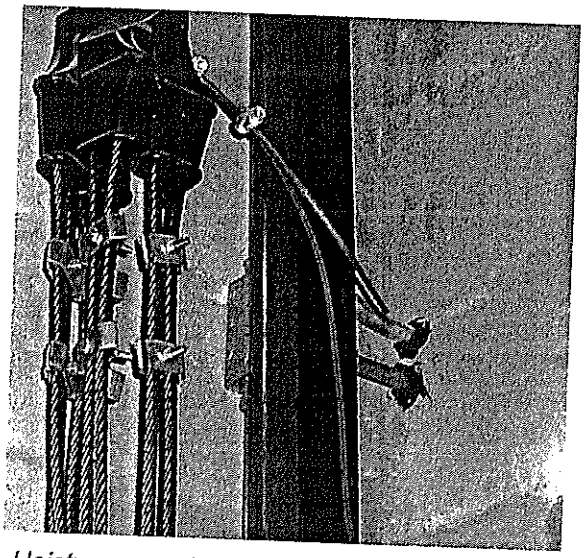

Hoistway penetration filled to maintain fire rating

Machine room

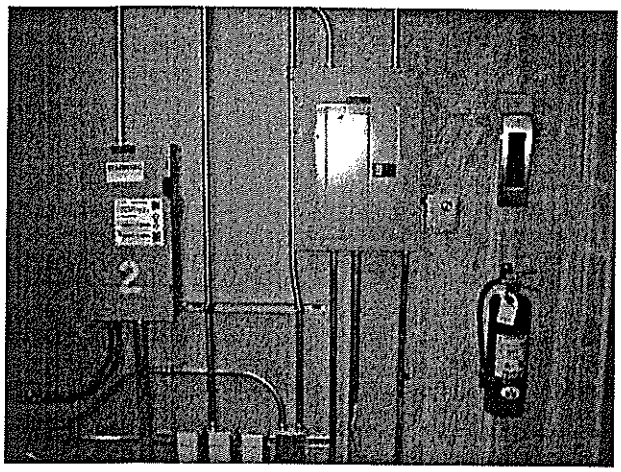

Machine room fire extinguisher

Self-closing, self-locking machine room door

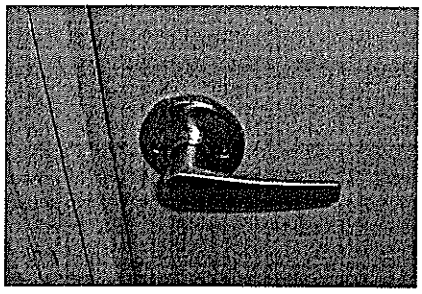

Door handle inside machine room

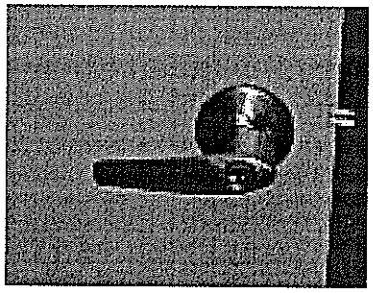

Door handle outside machine room

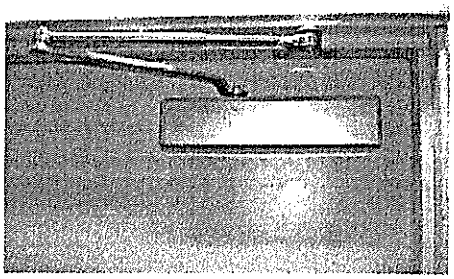

Closer on machine room door

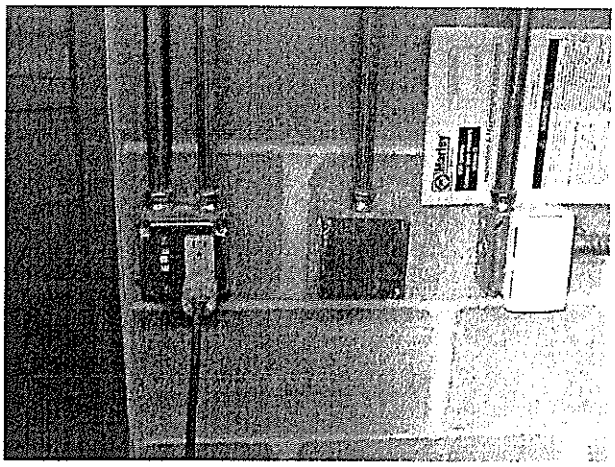

Hydraulic machine room electrical

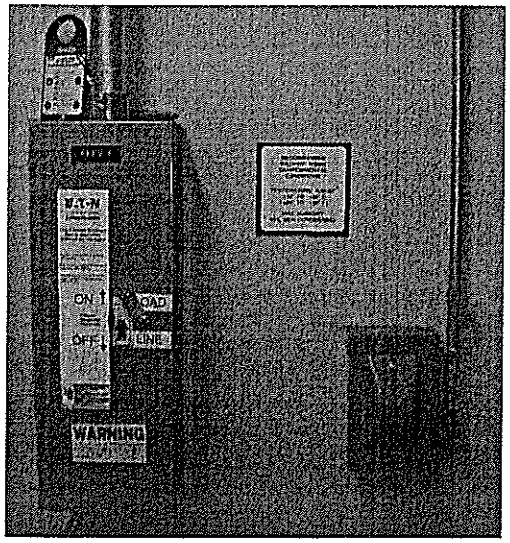

Labeled disconnect with separate car lighting disconnect

Approvals and version history

Compiled by: Technical Editor / Katherine Black

Checked by: Installation Development Manager / Randy McGinnis

Approved by: Vice-President, Installation / Mike Read

Issue	Date	Description of change	Ref CR	Approved by
-	2006-09-29	First issue		Mike Read

TRITON BARRIER® General Specifications

I. General

A. All TRITON BARRIER (the barrier) sections shall be designed, manufactured and/or supplied by Energy Absorption Systems, Inc., of Chicago, Illinois.

B. The barrier shall be a highly portable and crashworthy longitudinal barrier especially suited for use as temporary barrier in highway construction zones. The barrier shall also act as its own crashworthy end treatment.

C. The barrier shall provide a portable traffic control and positive protection system.

II. Construction

A. The barrier installation shall be constructed from a series of individual sections. Each section shall be constructed of a lightweight, recyclable*, virgin, linear low density, polyethylene plastic shell, with UV stabilizers and anti oxidants, designed to accept water ballast. Approximate physical dimensions and capacities of the sections shall be: length (pin to pin) 1981 mm [78 in.], width 533 mm [21 in.], height 813 mm [32 in.]. empty weight 64 kg [140 lb], full weight 612 kg [1350 lb], water ballast 5491 [145 gal]. Sections shall be constructed in white and work zone safety orange colors for high visibility.

B. Each barrier section shall be supported by an internal, galvanized, steel framework to provide additional rigidity during handling and impacts and equipped with a 12.7 mm [1/2 in.] dia., galvanized steel cable along a recess in the top of the section for maximum tensioning capability.

C. The ends of each section shall be constructed with vertically aligned knuckles which interlock with those of adjacent sections and accept a 51 mm [2 in.] dia. steel connecting pin. The connecting pin shall be constructed to securely join the sections and the tension cables for maximum impact perfomance.

D. Each section shall be constructed with ribbed sidewalls to interact with an impacting vehicle in a way that resists penetration, vaulting, and underriding and shall be stackable to reduce shipping and storage space. The ribbed sidewall of the barrier shall provide a convenient web to apply reflective sheeting.

E. Each section shall be constructed to allow empty sections to be stacked three high to reduce shipping & storage space.

F. Each section shall be constructed with elevated fork lift openings to allow for mechanical lifting when empty or full.

G. Each section shall be constructed with two 127 mm [5 in.] dia. quick fill openings with covers and a 38 mm [1 1/2 in.] dia. rapid release gate valve to allow quick draining of the water ballast. A reflectorized fill level indicator shall be constructed in the top of each section to allow quick verification that the section is adequately full of water ballast.

III. Perfomance Criteria

A. The TRITON BARRIER shall be fully tested to and meet the recommended structural adequacy, occupant risk, and vehicle trajectory criteria set forth in the National Cooperative Highway Research Program (NHCRP) Report 350 when properly installed according to the manufacturer's recommendations.

1. The longitudinal barrier shall meet the criteria of Test Level 2 (TL-2) length of need for impact conditions of 820 to 2000 kg [1808 to 4409 lb] vehicles with impacts at speeds of 70 km/h [44 mph].
2. The longitudinal barrier shall meet the length of need criteria for impact conditions of 100 km/h [62 mph] at 15 degrees or less with 820 to 2000 kg [1808 to 4409 lb] vehicles.
3. The barrier shall act as its own end treatment by meeting the criteria for TL-2 Non-Redirective Crash Cushion for impact conditions of 820-2000 kg [1808 to 4409 lb] vehicles with impacts at speeds of 70 km/h [44 mph].
4. The barrier when attached to rigid or semi-rigid barrier with transition hardware, shall meet the criteria of TL-2 transition for impact conditions of 820-2000 kg [1808 to 4409 lb] vehicles with impacts at speeds of 70 km/h [44 mph].

B. The barrier shall be capable of preventing vehicle penetration, vaulting. and underriding during TL-2 LON impacts and bring the impacting vehicle to a controlled stop in the vicinity of the impact area or redirect the vehicle for shallow angle impacts while undergoing controlled lateral deflection. For typical lateral deflection, See TRITON BARRIER Limitations & Warnings (found in TRITON BARRIER Manual).

C. For TL-2 LON impacts detached debris shall not show potential for penetrating the vehicle occupant compartment or presenting a hazard to other traffic, pedestrians, or workers in a work zone. The vehicle shall remain upright during and after the collision, although moderate roll, pitching and yawing may occur.

D. The vehicle's trajectory into adjacent traffic lanes after TL-2 LON impacts shall be minimized. The impact velocity of a hypothetical front seat passenger against the vehicle interior, as calculated from the longitudinal vehicle acceleration and 600 mm [23 5/8 in.] forward displacement. and the lateral vehicle acceleration and 300 mm [1 ft.] lateral displacement, shall be less than 12 m/s [39.3 ft/s], and the highest 10 ms average vehicle acceleration in the longitudinal and lateral directions subsequent to the instant of passenger impact shall be less than 20 g's.

IV. Design and Selection Criteria

A. Design, selection, and placement of the barrier should conform to applicable guidelines in:

1. U.S. Department of Transportation, Federal Highway Administration, "Manual on Uniform Traffic Control Devices" Washington, DC.: U.S. Government Printing Office, (1988) including all subsequent revisions.
2. American Association of State Highway and Transportation Officials. Roadside Design Guide Washington, D.C.: AASHTO, 1989 including all subsequent revisions.

B. Installation of the barrier, the end treatment and transitions when applicable shall be accomplished in accordance with the recommendations of Energy Absorption Systems, Inc. in the TRITON BARRIER installation manual and application manual.

SECTION 012100

ALLOWANCES

PART 1 - GENERAL

1.1 RELATED DOCUMENTS

A. Drawings and general provisions of the Contract, including General and Supplementary Conditions and other Division 01 Specification Sections, apply to this Section.

1.2 SUMMARY

A. This Section includes administrative and procedural requirements governing allowances.

1. Certain items are specified in the Contract Documents by allowances. In some cases, these allowances include installation. Allowances have been established in lieu of additional requirements and to defer selection of actual materials and equipment to a later date when additional information is available for evaluation. If necessary, additional requirements will be issued by Change Order.

B. Types of allowances include the following:

1. Lump-sum allowances.
2. Quantity allowances.

C. Related Sections include the following:

1. Division 01 Section "Unit Prices" for procedures for using unit prices.

2. Standard Contract Provisions Article 3 CHANGES and Special Requirements Section G.32

3. Divisions 02 through 33 Sections for items of Work covered by allowances.

1.3 SELECTION AND PURCHASE

A. At the earliest practical date after award of the Contract, advise Contracting Officer's Technical Representative (COTR) of the date when final selection and purchase of each product or system described by an allowance must be completed to avoid delaying the Work.

B. At COTR's request, obtain proposals for each allowance for use in making final selections. Include recommendations that are relevant to performing the Work.

C. Purchase products and systems selected by COTR from the designated supplier.

1.4 SUBMITTALS

A. Submit proposals for purchase of products or systems included in allowances, in the form specified for Change Orders.

B. Submit invoices or delivery slips to show actual quantities of materials delivered to the site for use in fulfillment of each allowance.

C. Submit time sheets and other documentation to show labor time and cost for installation of allowance items that include installation as part of the allowance.

D. Coordinate and process submittals for allowance items in same manner as for other portions of the Work.

1.5 ADJUSTMENT OF ALLOWANCES

A. Allowance Adjustment: To adjust allowance amounts, prepare a Change Order proposal based on the difference between purchase amount and the allowance, multiplied by the unit prices contained in the bid form where applicable, and verified by final measurement of work-in-place where applicable. If applicable, include reasonable allowances for cutting losses, tolerances, mixing wastes, normal product imperfections, and similar margins.

1. .If requested, prepare explanation and documentation to substantiate distribution of overhead costs and other margins claimed.

2. Submit substantiation of a change in scope of work, if any, claimed in Change Orders related to unit-cost allowances.

3. Owner reserves the right to establish the quantity of work-in-place by independent quantity survey, measure, or count.

1.6 COORDINATION

A. Coordinate allowance items with other portions of the Work. Furnish templates as required to coordinate installation.

PART 2 - PRODUCTS (Not Used)
PART 3 - EXECUTION

3.1 EXAMINATION

A. Examine products covered by an allowance promptly on delivery for damage or defects. Return damaged or defective products to manufacturer for replacement.

3.2 PREPARATION

A. Coordinate materials and their installation for each allowance with related materials and installations to ensure that each allowance item is completely integrated and interfaced with related work.

3.3 SCHEDULE OF ALLOWANCES

A. Allowance No. 1 – Payment to PEPCO for Permanent Class of Service: Include the sum of $30,000 for all PEPCO related fees associated with the permanent electrical power connection from PEPCO's transformer vault to building's electrical duct bank. The allowance will not be used for temporary electrical service and time used to procure PEPCO approval; these costs shall be included in bid price.

B. Allowance No. 2 – Payment for Delivery and Installation of Elevator: Include the sum of

$40,000 for pick-up from 2200 Adams Place, NE warehouse and delivery to jobsite an existing Kone EcoSense elevator and associated equipment; testing of elevator controller, and installation of elevator by Kone personnel. See attached elevator shop drawings and Kone *Guide to General Contractor.* All other work not described above shall be included in bid price for Division 14.

C. Allowance No. 3 – Payment for Site and Building Security system: Include the sum of $100,000 for all work and coordination described in Specification Section 16727 and graphically represented on drawings. All security system equipment and OPM Protective Security Division-approved vendor to be determined.

D. Allowance No. 4 – Payment for Building IT/Telephony Systems: Include the sum of $50,000 to furnish and install OCTO DCNET specified network and telephony equipment and cabling.

END OF SECTION 012100

B.5 PRICE BREAK DOWN FORM

The bidder must complete this breakdown of prices and submit it with its bid. In case of any discrepancy in the total bid price entered here and the lump sum price in B.4, Section-B.4 shall govern.

Breakdown into Divisions of lump sum price bid under CLIN 0001, Section-B.4

DIVISION NO. *	DESCRIPTION	TOTAL PRICE BREAKDOWN
Div. 01	General Requirements	.....
	Allowance #1 Payment to PEPCO	$ 30,000
	Furnish & Install Triton Barriers 5 @ _____ each	
Div. 02	Existing Conditions	.....
Div. 03	Concrete	.....
Div. 04	Masonry	.....
Div. 05	Metals	.....
Div. 06	Wood, Plastics, and Composites	.....
Div. 07	Thermal and Moisture Protection	.....
Div. 08	Openings	.....

Div. 09	Finishes	.....
Div. 10	Specialties	.....
Div. 11	Equipment	.....
Div. 12	Furnishings	.....
Div. 13	Special Construction	.....
Div. 14	Conveying Equipment	.....
	Allowance #2 - Payment for Elevator	$ 40,000
Div. 15	Mechanical	.....
Div. 16	Electrical & Communication	.....
	Allowance #3 – Specification Section 16727	$100,000
	Allowance #4 – IT & Telephony Equipment	$ 50,000
Div. 31	Earthwork	
Div. 32	Exterior Improvements	
Div. 33	Utilities	
Lump Sum Bid Price	Lump Sum Bid Price (copy from CLIN # 0001, Section-B.4, Part-I of IFB)	.....

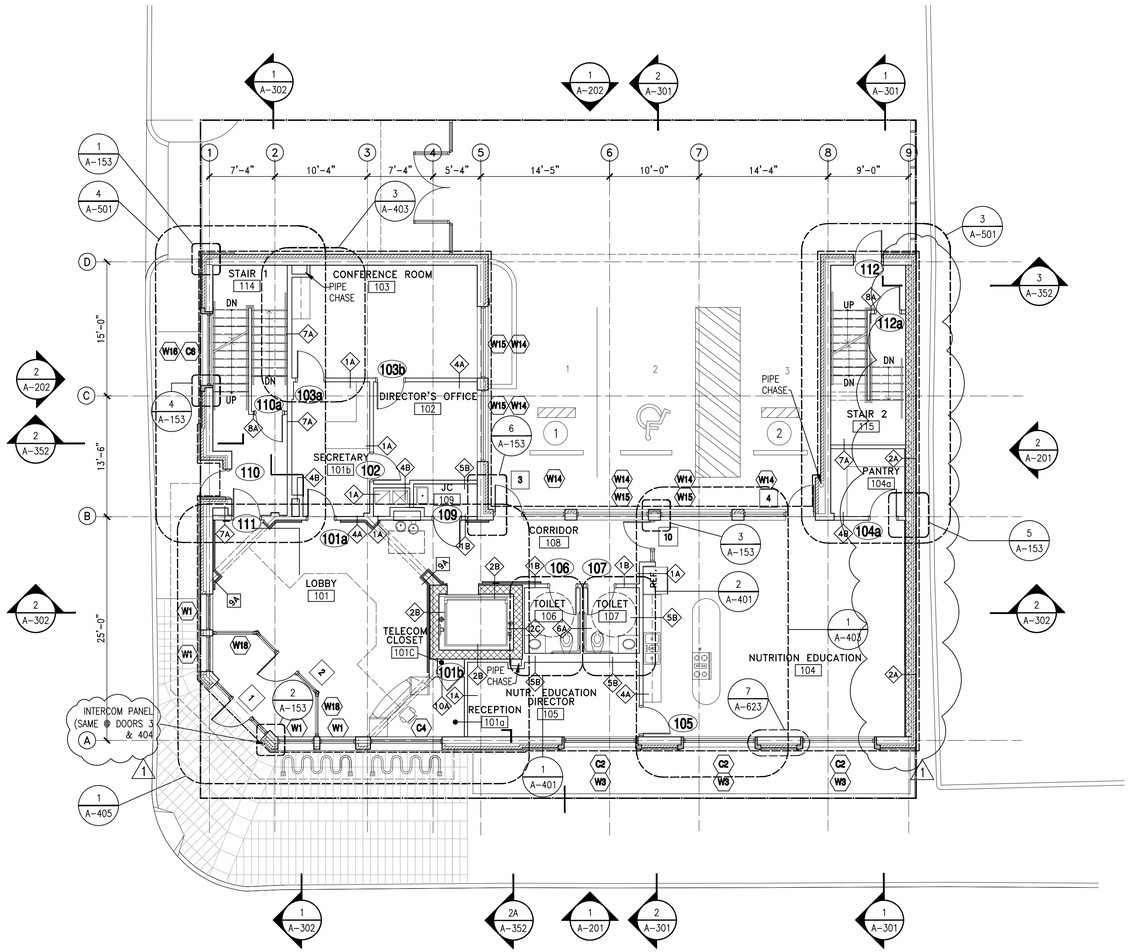

2 FIRST FLOOR PLAN

A-101 SCALE: 1/8"=1'-0"

8' 4' 0 8' 16'

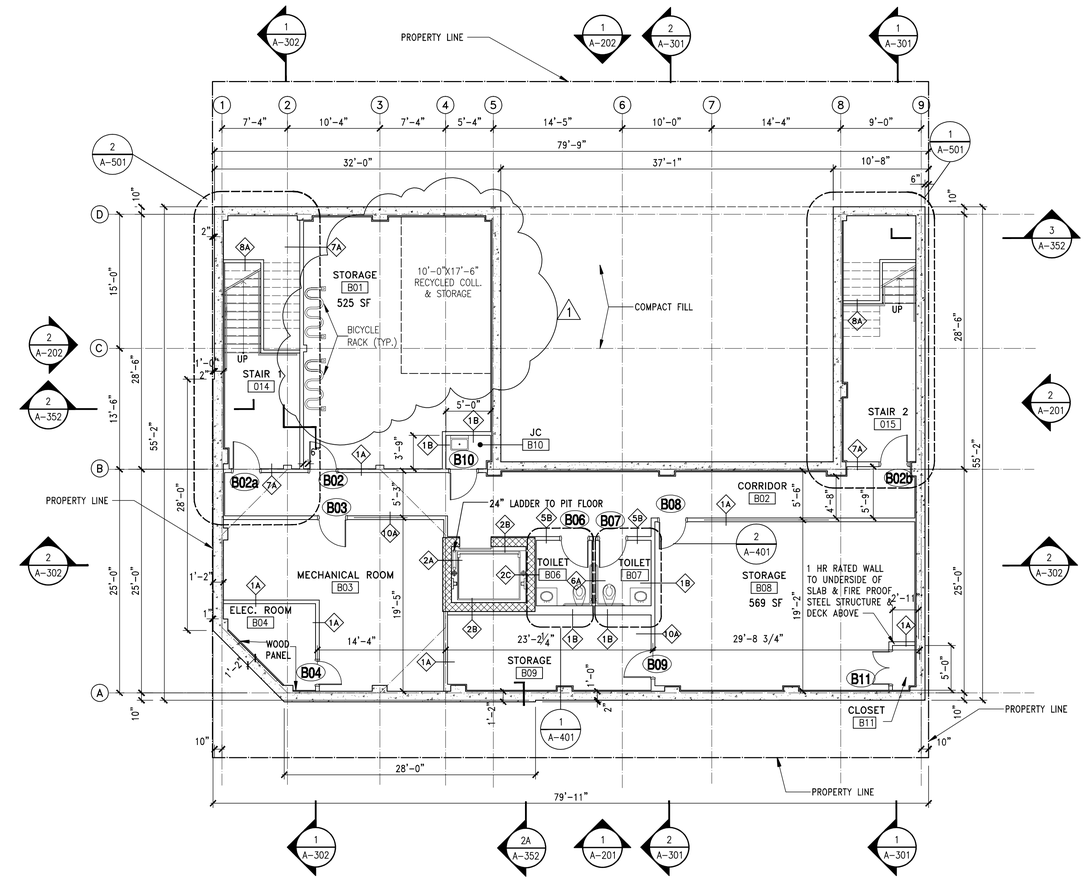

1 CELLAR FLOOR PLAN

A-101 SCALE: 1/8"=1'-0"

8' 4' 0 8' 16'

NOTES:

1. SEE SHEETS G.003 AND G.004 FOR LAYOUT OF SIGNAGE.
2. DOOR & FRAME TYPES SEE A-701 & A-702.
3. FLOOR PATTERN SEE A-731.
4. WINDOW TYPES SEE A-701 & A-702.
5. CHAIR RAIL LOCATION SEE FINISH SCHEDULE A-731 AND CHAIR RAIL DETAIL A-653.
6. COLUMNS LOCATION SEE A-104, A-105.

1. KEY PAD TO BE CONTROLLED FROM RECEPTION DESK.
2. ALL SIGNS TO BE MOUNTED ON BUILDING OR POST.
4. PROVIDE BULLARDS WHERE SHOWN INCLUDING 20" DIA. X 30" DEEP FOUNDATION ON 4" CRUSHED STONE.

4. PROVIDE BULLARDS WHERE SHOWN INCLUDING PERMANENT MARKINGS @ PARKING:

(1) HYBRID VEHICLE PARKING ONLY

(2) VAN POOL VEHICLE ONLY

LEGEND

- GYPSUM BOARD WALL
- CMU WALL
- BRICK WALL
- ARCHITECTURAL STONE

DESIGNED Y.RYZHKOVA	1	04.01.09	ADDENDUM 1 – VALUE ENGINEERING		
DRAWN G.ZUBERI	ISSUED	02.25.09			
CHECKED M.KNIGHT	REVISION	DATE	DESCRIPTION	BY	APP

CERTIFICATION

PROJECT DRAWINGS

ARCHITECTURE

CELLAR & FIRST FLOOR PLANS

DRAWING NO.

WARD 1 SENIOR WELLNESS CENTER
3531 Georgia Ave., N.W.
Washington, D.C. 20011

A-101

CHIEF DESIGN & ENGINEERING DIVISION

DATE

REGISTRATION No.

DATE

ARCHITECT

DATE

GOVERNMENT OF THE DISTRICT OF COLUMBIA
OFFICE OF PROPERTY MANAGEMENT

PROJECT NO. EA 129 C

BLDG NO.

DATE 11.02.06

SHEET NO 21 OF 98

0515_CD\DWG\ARCH DWG\PLOT DWGS\0515_A101.dwg

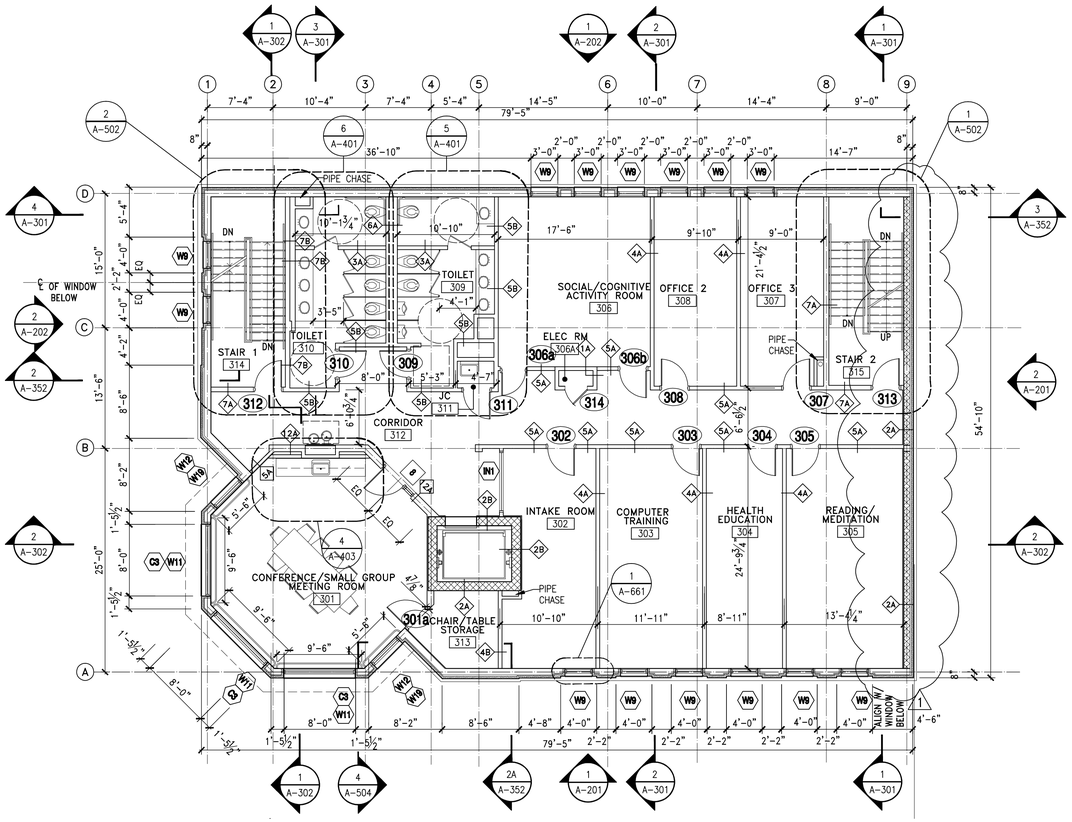

2 A-102 **THIRD FLOOR PLAN**
SCALE: 1/8"=1'-0"

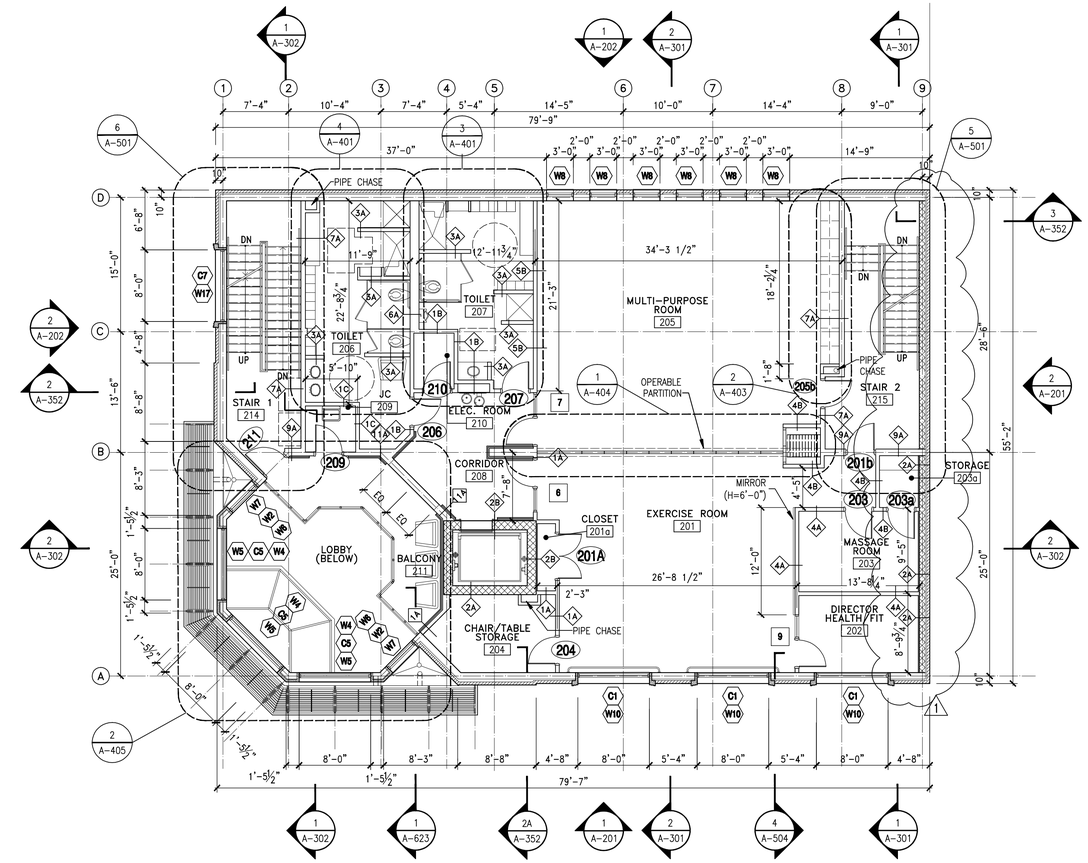

1 A-102 **SECOND FLOOR PLAN**
SCALE: 1/8"=1'-0"

NOTES

1. WALL TYPES SEE A-151 & A-152.
2. DOOR & FRAME TYPES SEE A-701 & A-702.
3. FLOOR PATTERN SEE A-731.
4. WINDOW TYPES SEE A-703 & A-704.
5. CHAIR RAIL LOCATION SEE FINISH SCHEDULE A-731 AND CHAIR RAIL DETAIL SEE 6/A-504.
6. COLUMNS LOCATION SEE A-104, A-105.

LEGEND

- GYPSUM BOARD WALL
- CMU WALL
- BRICK WALL
- ARCHITECTURAL STONE (1)

DESIGNED Y.RYZHKOVA	1	04.01.09	ADDENDUM 1 – VALUE ENGINEERING		
DRAWN G.ZUBERI	ISSUED	02.25.09			
CHECKED M.KNIGHT	REVISION	DATE	DESCRIPTION	BY	APP

CERTIFICATION

PROJECT DRAWINGS

ARCHITECTURE

SECOND & THIRD FLOOR PLANS

DRAWING NO.

WARD 1 SENIOR WELLNESS CENTER
3531 Georgia Ave., N.W.
Washington, D.C. 20011

A-102

CHIEF DESIGN & ENGINEERING DIVISION

DATE

REGISTRATION No.
DATE

ARCHITECT
DATE

GOVERNMENT OF THE DISTRICT OF COLUMBIA
OFFICE OF PROPERTY MANAGEMENT

PROJECT NO. EA 129 C
BLDG NO.
DATE 11.02.06
SHEET NO 22 OF 98

0515_CD\DWG\ARCH DWG\PLOT DWGS\0515_A102.dwg

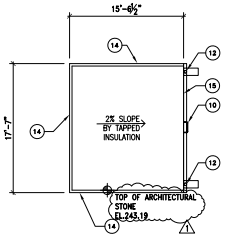

5 A-103 STAIR-1 ROOF PLAN
SCALE: 1/8"=1'-0"

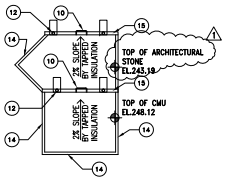

3 A-103 ELEVATOR LOBBY ROOF PLAN
SCALE: 1/8"=1'-0"

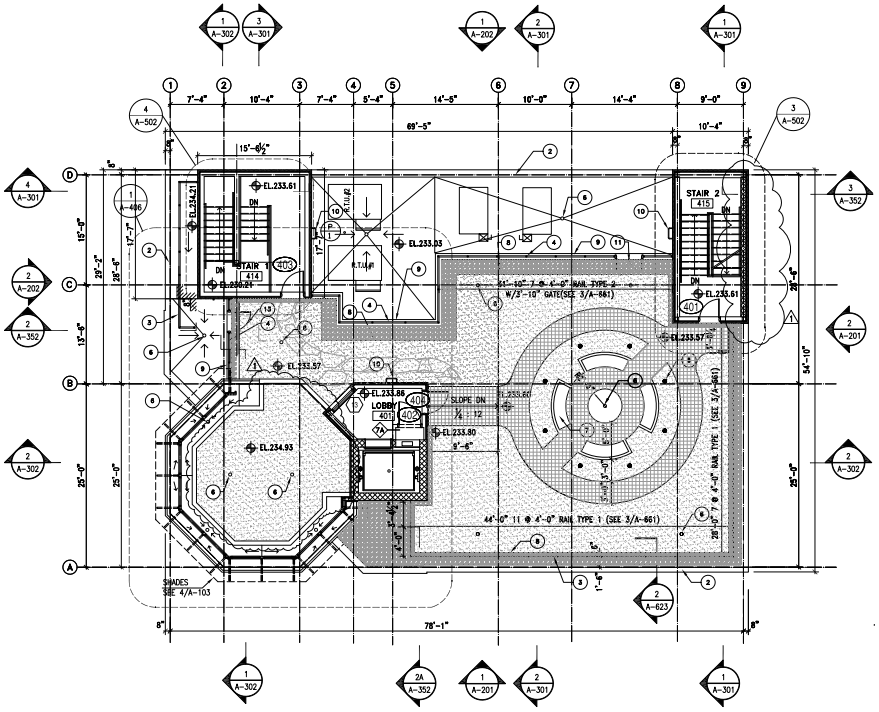

1 A-103 ROOF PLAN
SCALE: 1/8"=1'-0"

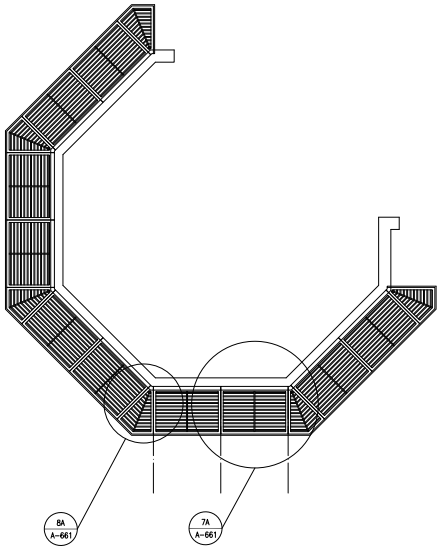

4 A-103 SHADES PLAN
SCALE: 1/8"=1'-0"

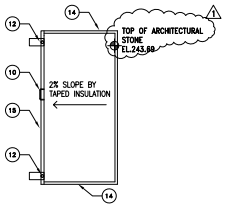

2 A-103 STAIR-2 ROOF PLAN
SCALE: 1/8"=1'-0"

LEGEND

- SEEDING
- RIVER ROCK
- THERMOPLASTIC ROOF
- BRICK PAVERS

NOTE

1. 44" FENCE, TYPE 3 (SEE 3/A-661)
2. PARAPET
3. 52" FENCE, TYPE 1. (SEE 3/A-661)
4. 70" FENCE TYPE 2 (SEE 3/A-661)
5. 6"ø BOLLARD LIGHT
6. ROOF DRAIN, SEE PLUMBING DWGS.
7. BENCH
8. SOIL RETENTION TEE
9. METAL CURB SEE 4/A-406
10. LADDER
11. 4'-0"X5'-10" METAL GATE
12. DOWN SPOUT & SPLASH BLOCK, TYP.
13. 3'-0"X4'-4" METAL GATE
14. GRAVEL STOP SEE 7/A-621 TYP.
15. FACE MOUNTED GUTTER EDGE SEE 8/A-621

KEY NOTES:

1. AREA OF GREEN ROOF = 2024 SQ. FT.
2. AREA OF SITE = 6066 SQ. FT.

DESIGNED Y.RYZHKOVA	1	04.01.09	ADDENDUM 1 – VALUE ENGINEERING	
DRAWN G.ZUBERI	ISSUED	02.25.09		
CHECKED M.KNIGHT	REVISION	DATE	DESCRIPTION	BY / APP

CERTIFICATION

PROJECT DRAWINGS

ROOF PLANS

WARD 1 SENIOR WELLNESS CENTER
3531 Georgia Ave., N.W.
Washington, D.C.

ARCHITECTURE

DRAWING NO.

A-103

CHIEF DESIGN & ENGINEERING DIVISION

DATE

REGISTRATION No.
DATE
ARCHITECT
DATE

GOVERNMENT OF THE DISTRICT OF COLUMBIA
OFFICE OF PROPERTY MANAGEMENT

PROJECT NO. EA 129 C
BLDG NO.
DATE 11.02.08
SHEET NO 23 OF 98

0515_CD\DWG\ARCH DWG\PLOT DWGS\0515_A103.dwg

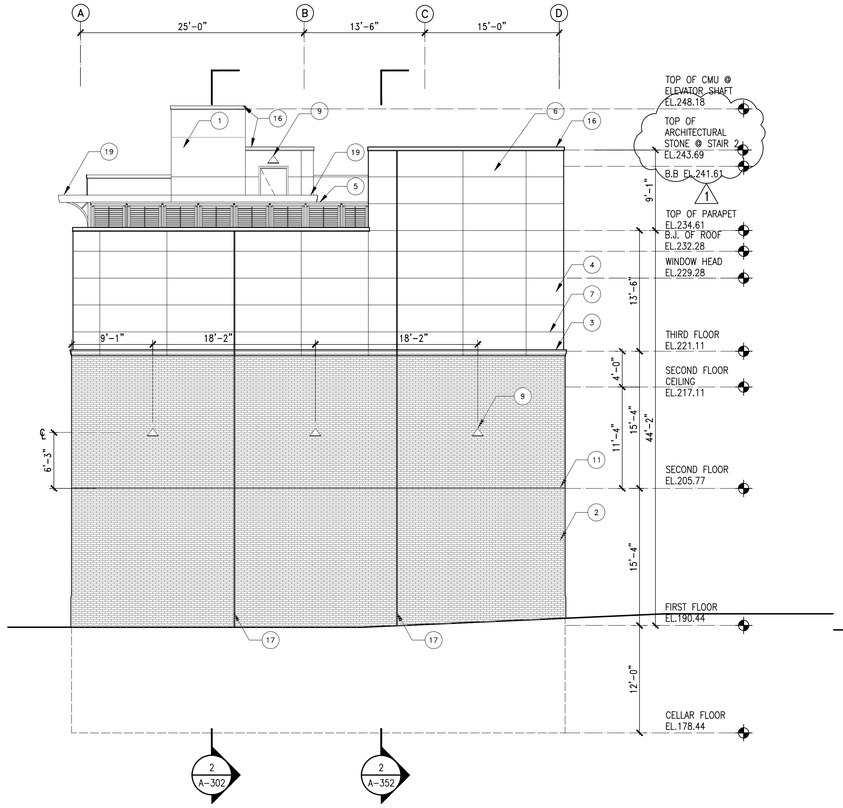

2 A-201 SOUTH ELEVATION

SCALE: 1/8"=1'-0"

1/8"=1'-0" 8' 4' 0 8' 16'

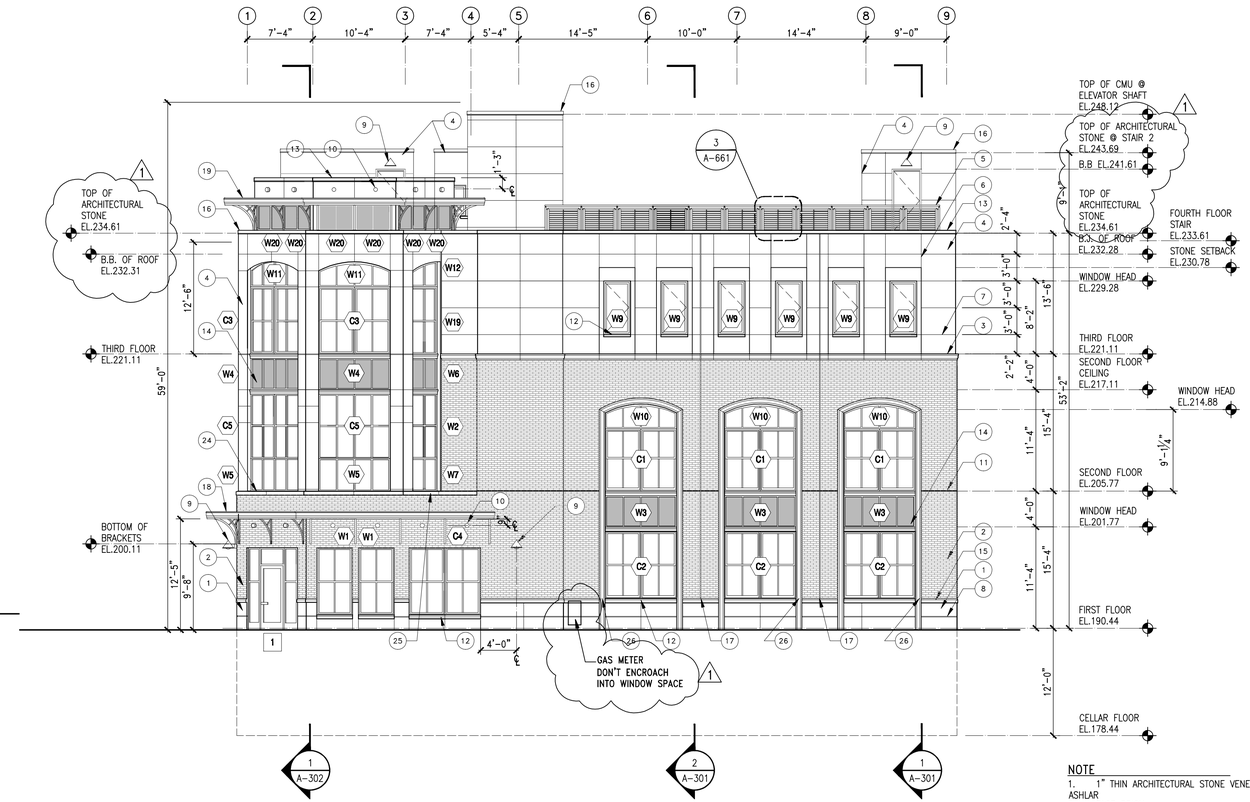

1 A-201 WEST ELEVATION

SCALE: 1/8"=1'-0"

1/8"=1'-0" 8' 4' 0 8' 16'

NOTE

1. 1" THIN ARCHITECTURAL STONE VENEER SAWN ASHLAR
2. FACE BRICK
3. ARCHITECTURAL STONE CORNICE TYPE-1C - SEE SHEET A-662.
4. 3" ARCHITECTURAL STONE PANEL
5. 52" HIGH FENCE TYPE 1 (SEE 3/A 661)
6. ARCHITECTURAL STONE JOINT (VERTICAL)
7. ARCHITECTURAL STONE JOINT (HORIZONTAL)
8. 1" ARCHITECTURAL STONE HORIZONTAL RUSTICATION
9. LIGHT FIXTURE TYPE-A
10. LIGHT FIXTURE TYPE-B (ABOVE SHADE)
11. FLASHING
12. ARCHITECTURAL STONE SILL
13. METAL COPING
14. SPANDREL GLASS
15. ARCHITECTURAL STONE BAND TYPE-2B (SEE A-662).
16. METAL GRAVEL STOP
17. 1" CONTROL JOINT
18. CANOPY
19. SHADES
20. 7"x 20" LOUVER W/INSECT SCREEN & RAINSTOP-COLOR TO MATCH BRICK.
21. 70" HIGH FENCE TYPE 2 (SEE 3/A-661)
22. 7"x 15" WALL CAP
23. 10"x 12" WALL CAP
24. ARCHITECTURAL STONE CORNICE TYPE 1A - SEE SHEET A-662.
24. ARCHITECTURAL STONE CORNICE TYPE 1B - SEE SHEET A-662.
25. ARCHITECTURAL STONE BAND TYPE 2A - SEE HEET A-662.
26. 16"X16" LOUVER W/INSECT SCREEN AND RAINSTOP. COLOR TO MATCH BRICK.
27. 18"X18" LOUVER W/INSECT SCREEN AND RAINSTOP. COLOR TO MATCH ARCHITECTURAL STONE
28. 44" HIGH FENCE TYPE 3 (SEE 3/A-661)

PROVIDE FINISH FACE ON ALL EXPOSED SURFACES OF BRICK WORK & ARCHITECTURAL STONE WORK.

LEGEND

- FACE BRICK
- ARCHITECTURAL STONE PANEL
- SPANDREL GLASS

DESIGNED Y.RYZHKOVA	1	04.01.09	ADDENDUM 1 - VALUE ENGINEERING		
DRAWN M. SHAMIM	ISSUED	02.25.09			
CHECKED M.KNIGHT	REVISION	DATE	DESCRIPTION	BY	APP

CERTIFICATION

PROJECT DRAWINGS

ARCHITECTURE

EXTERIOR ELEVATIONS

DRAWING NO.

WARD 1 SENIOR WELLNESS CENTER
3531 Georgia Ave., N.W.
Washington, D.C. 20011

A-201

CHIEF DESIGN & ENGINEERING DIVISION

DATE

REGISTRATION No.

DATE

ARCHITECT

DATE

GOVERNMENT OF THE DISTRICT OF COLUMBIA
OFFICE OF PROPERTY MANAGEMENT

PROJECT NO. EA 129 C

BLDG NO.

DATE 11.02.06

SHEET NO 30 OF 98

0515_CD\DWG\ARCH DWG\PLOT DWGS\0515_A201.dwg

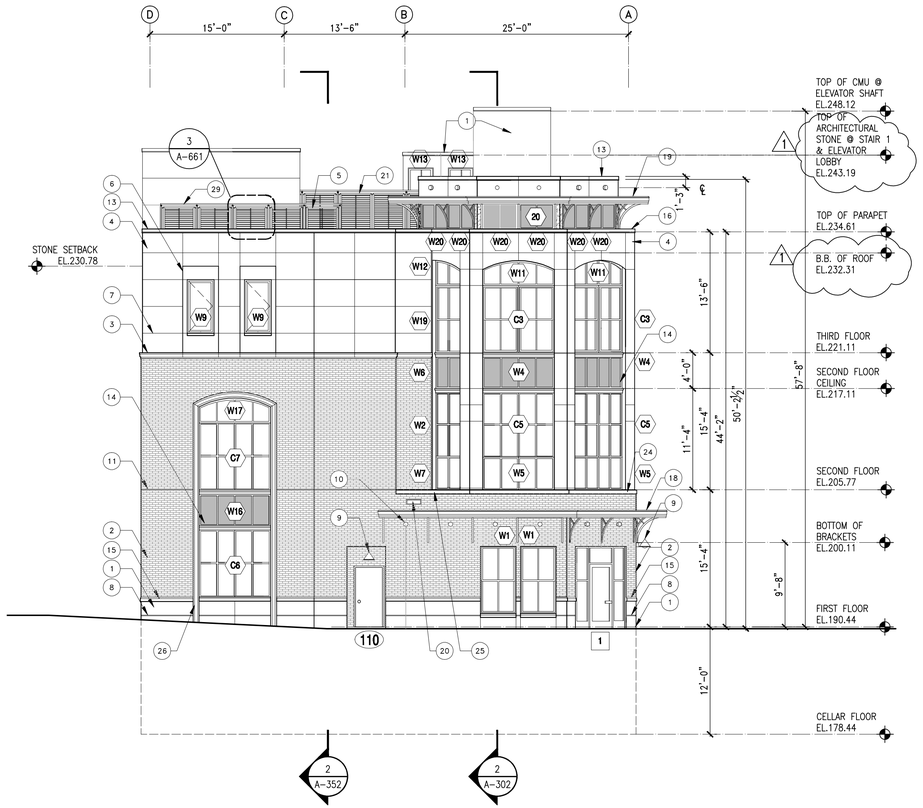

2 / A-202 NORTH ELEVATION

SCALE: 1/8"=1'-0"

8' 4' 0 8' 16'
1/8"=1'-0"

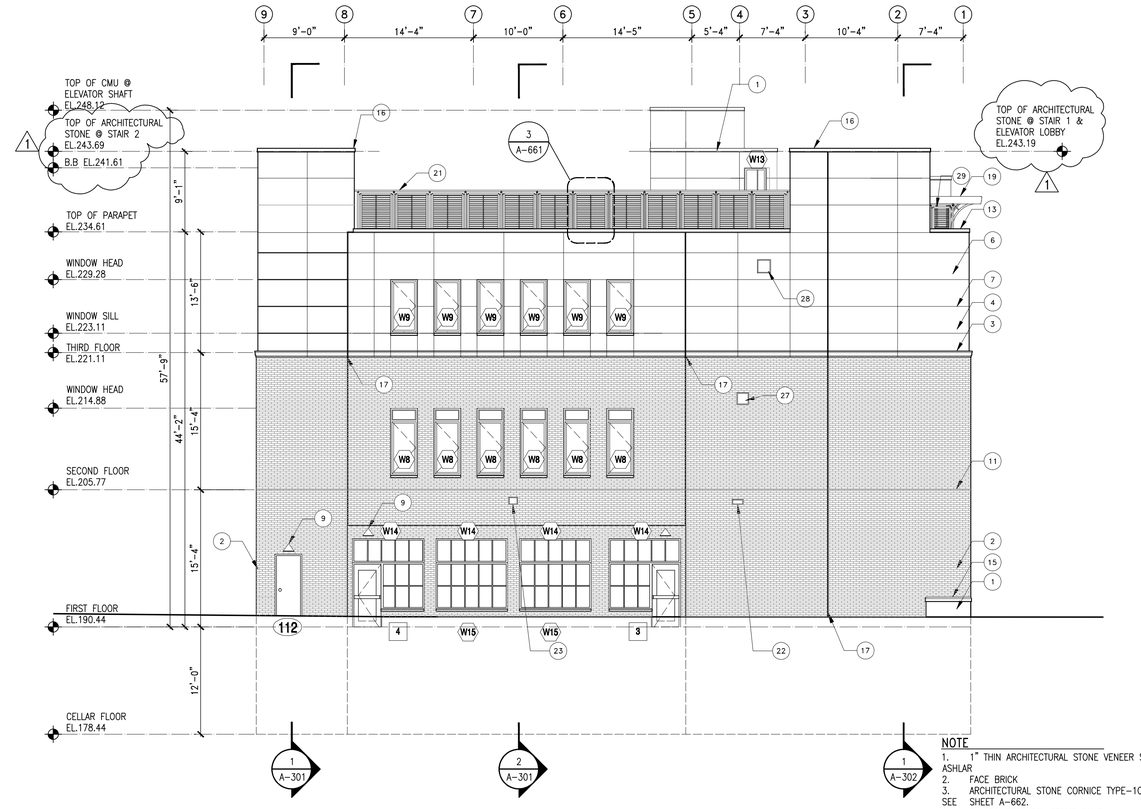

1 / A-202 EAST ELEVATION

SCALE: 1/8"=1'-0"

8' 4' 0 8' 16'
1/8"=1'-0"

LEGEND

- FACE BRICK
- ARCHITECTURAL STONE PANEL
- SPANDREL GLASS

NOTE

1. 1" THIN ARCHITECTURAL STONE VENEER SAWN ASHLAR
2. FACE BRICK
3. ARCHITECTURAL STONE CORNICE TYPE-1C - SEE SHEET A-662.
4. 3" ARCHITECTURAL STONE PANEL
5. 52" HIGH FENCE TYPE 1 (SEE 3/A 661)
6. ARCHITECTURAL STONE JOINT (VERTICAL)
7. ARCHITECTURAL STONE JOINT (HORIZONTAL)
8. 1" ARCHITECTURAL STONE HORIZONTAL RUSTICATION
9. LIGHT FIXTURE TYPE-A
10. LIGHT FIXTURE TYPE-B (ABOVE SHADE)
11. FLASHING
12. ARCHITECTURAL STONE SILL
13. METAL COPING
14. SPANDREL GLASS
15. ARCHITECTURAL STONE BAND TYPE-2B (SEE A-662).
16. METAL GRAVEL STOP
17. 1" CONTROL JOINT
18. CANOPY
19. SHADES
20. 7"x 20" LOUVER W/INSECT SCREEN & RAINSTOP-COLOR TO MATCH BRICK.
21. 70" HIGH FENCE TYPE 2 (SEE 3/A-661)
22. 7"x 15" WALL CAP
23. 10"x 12" WALL CAP
24. ARCHITECTURAL STONE CORNICE TYPE 1A - SEE SHEET A-662.
24. ARCHITECTURAL STONE CORNICE TYPE 1B - SEE SHEET A-662.
25. ARCHITECTURAL STONE BAND TYPE 2A - SEE HEET A-662.
26. 16"X16" LOUVER W/INSECT SCREEN AND RAINSTOP. COLOR TO MATCH BRICK.
27. 18"X18" LOUVER W/INSECT SCREEN AND RAINSTOP. COLOR TO MATCH ARCHITECTURAL STONE
28. 44" HIGH FENCE TYPE 3 (SEE 3/A-661)

PROVIDE FINISH FACE ON ALL EXPOSED SURFACES OF BRICK WORK & ARCHITECTURAL STONE WORK.

DESIGNED Y.RYZHKOVA	1	04.01.09	ADDENDUM 1 – VALUE ENGINEERING	
DRAWN M. SHAMIM	ISSUED	02.25.09		
CHECKED M.KNIGHT	REVISION	DATE	DESCRIPTION	BY / APP

CERTIFICATION

PROJECT DRAWINGS

ARCHITECTURE

EXTERIOR ELEVATIONS

DRAWING NO. A-202

WARD 1 SENIOR WELLNESS CENTER
3531 Georgia Ave., N.W.
Washington, D.C.

CHIEF DESIGN & ENGINEERING DIVISION
DATE

REGISTRATION No.
DATE

ARCHITECT
DATE

GOVERNMENT OF THE DISTRICT OF COLUMBIA
OFFICE OF PROPERTY MANAGEMENT

PROJECT NO. EA 129 C
BLDG NO.
DATE 11.02.06
SHEET NO 31 OF 98

0515_CD\DWG\ARCH DWG\PLOT DWGS\0515_A201.dwg

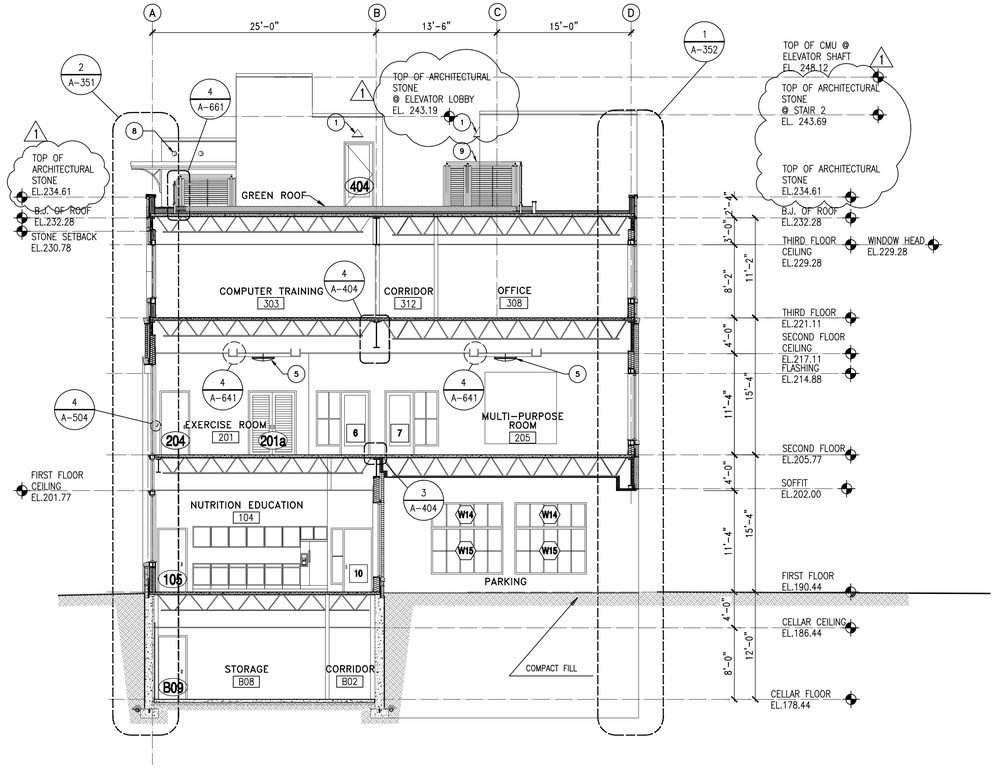

2 A-301 **SECTION 2-2**
SCALE: 1/8"=1'-0"

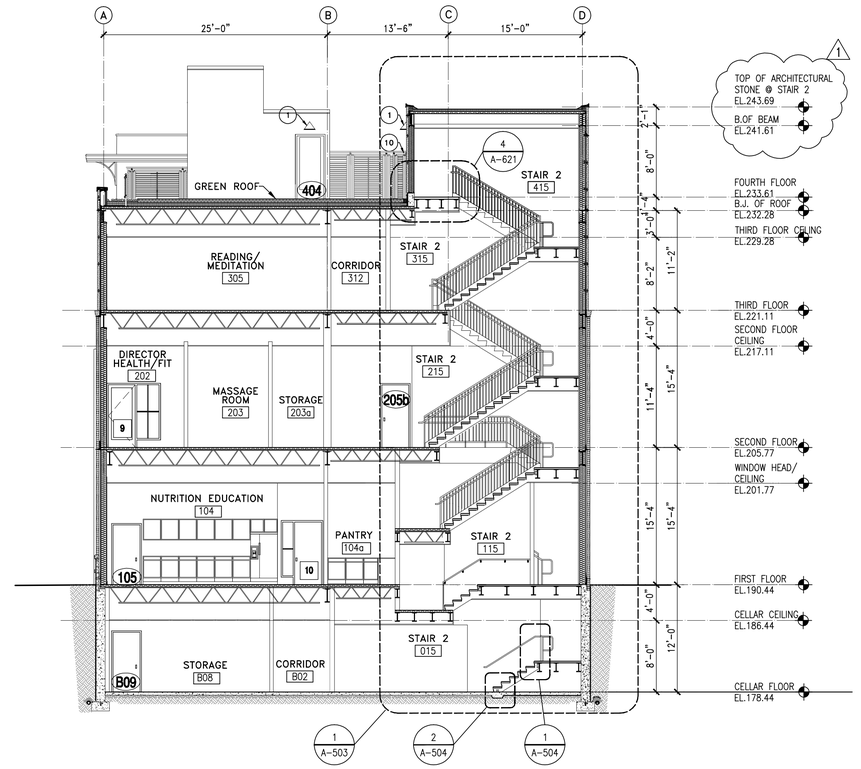

1 A-301 **SECTION 1-1**
SCALE: 1/8"=1'-0"

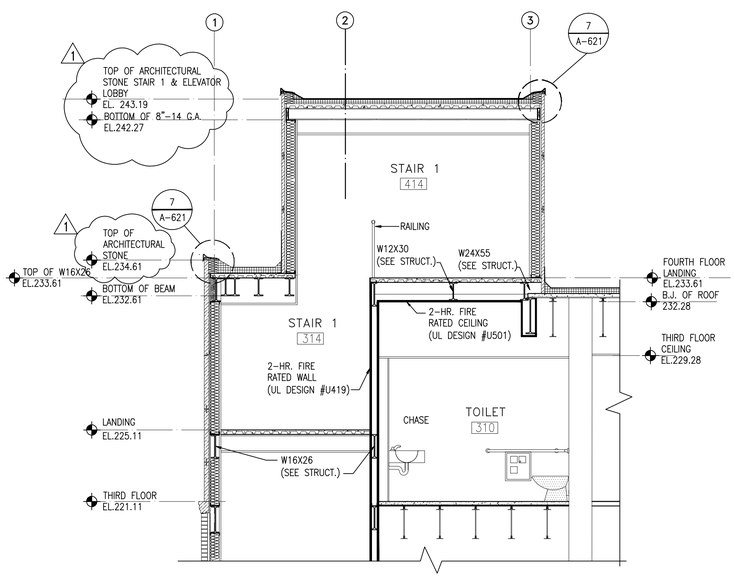

4 A-301 **SECTION 4-4**
SCALE: 1/4"=1'-0"

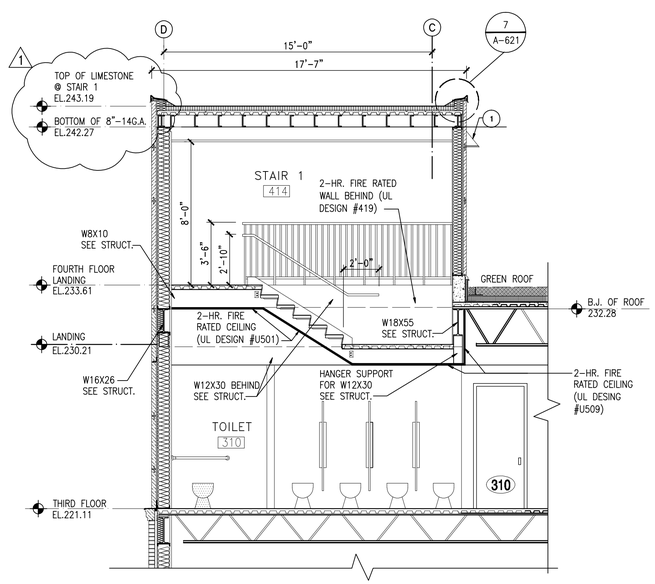

3 A-301 **SECTION 3-3**
SCALE: 1/4"=1'-0"

NOTE

1. LIGHT FIXTURE TYPE-A
2. LIGHT FIXTURE TYPE-C
3. CHAIR RAIL
4. GUARD RAIL
5. LIGHT FIXTURE TYPE-D
6. LIGHT FIXTURE TYPE-E
7. SCUPPER
8. LIGHT FIXTURE TYPE-B
9. 70" HIGH FENCE TYPE 2 (SEE 3/A-661)
10. 52" HIGH FENCE TYPE 1 (SEE 3/A-661)
11. 3'-0"X4'-4" METAL GATE

DESIGNED Y.RYZHKOVA	1	04.01.09	ADDENDUM 1 – VALUE ENGINEERING	
DRAWN G.ZUBERI	ISSUED	02.25.09		
CHECKED M.KNIGHT	REVISION	DATE	DESCRIPTION	BY / APP

CERTIFICATION

PROJECT DRAWINGS

ARCHITECTURE

BUILDING SECTIONS

DRAWING NO. A-301

WARD 1 SENIOR WELLNESS CENTER
3531 Georgia Ave., N.W.
Washington, D.C.

CHIEF DESIGN & ENGINEERING DIVISION

DATE

REGISTRATION No.
DATE

ARCHITECT
DATE

GOVERNMENT OF THE DISTRICT OF COLUMBIA
OFFICE OF PROPERTY MANAGEMENT

PROJECT NO. EA 129 C
BLDG NO.
DATE 11.02.06
SHEET NO 32 OF 98

0515_CD\DWG\ARCH DWG\PLOT DWGS\0515_A301.dwg

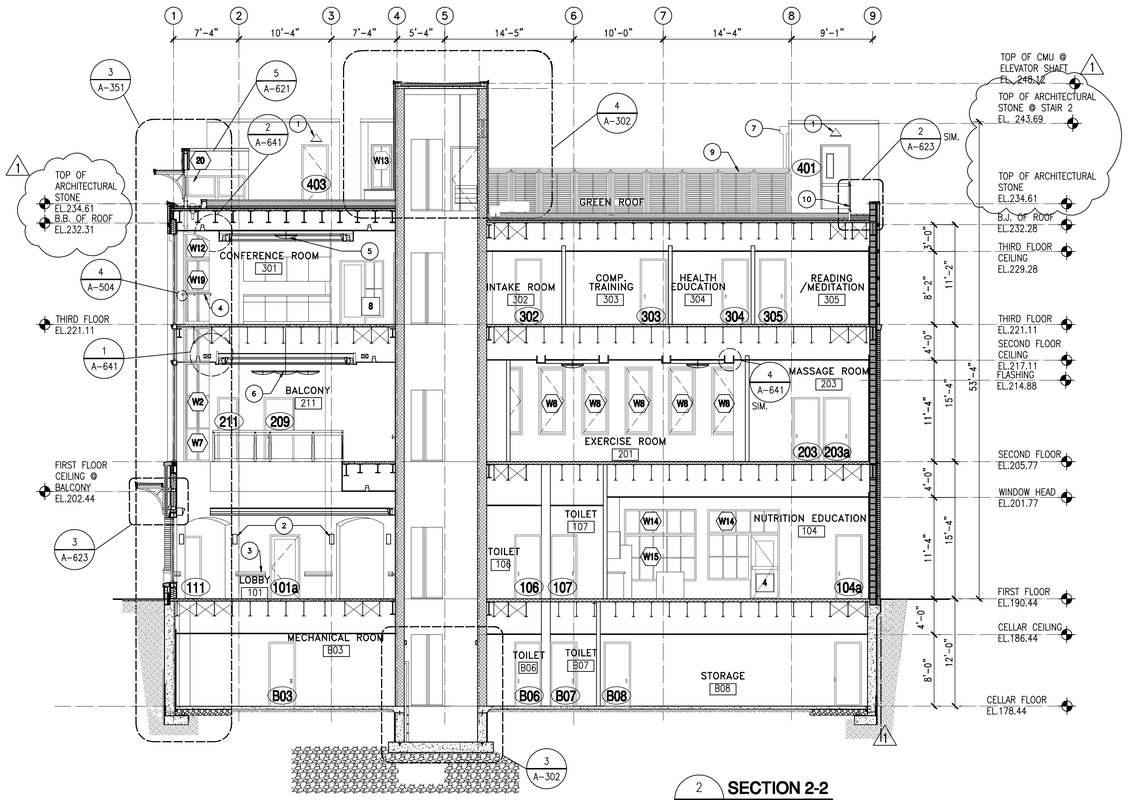

2 A-302 **SECTION 2-2**
SCALE: 1/8"=1'-0"

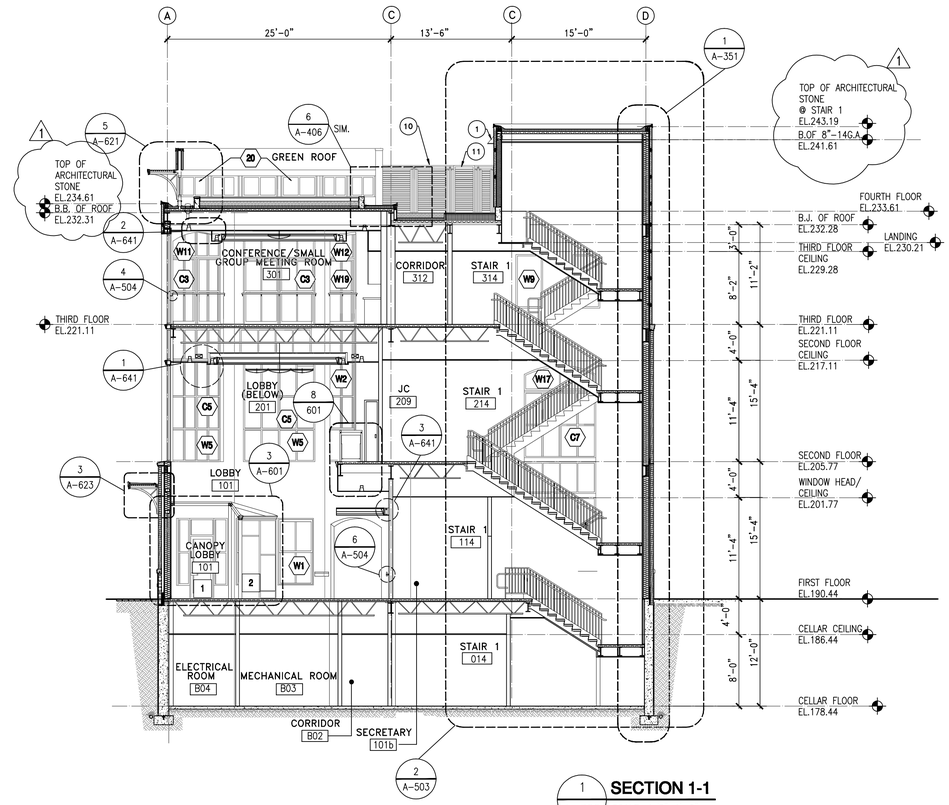

1 A-302 **SECTION 1-1**
SCALE: 1/8"=1'-0"

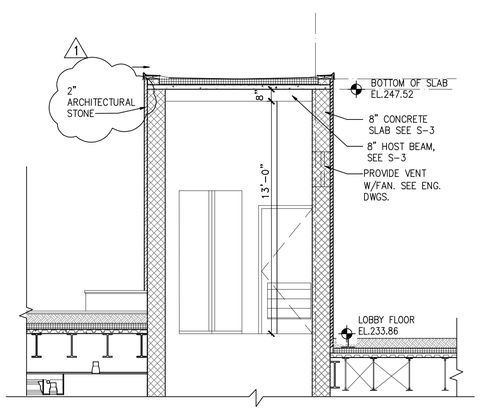

4 A-302 **ELEVATOR BULKHEAD DETAIL**
SCALE: 1/4"=1'-0"

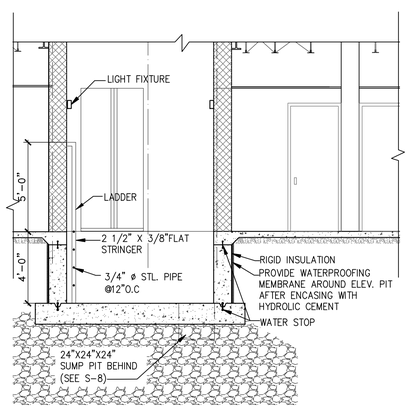

3 A-302 **ELEVATOR PIT DETAIL**
SCALE: 1/4"=1'-0"

NOTE

1. LIGHT FIXTURE TYPE-A
2. LIGHT FIXTURE TYPE-C
3. CHAIR RAIL
4. GUARD RAIL
5. LIGHT FIXTURE TYPE-D
6. LIGHT FIXTURE TYPE-E
7. SCUPPER
8. LIGHT FIXTURE TYPE-B
9. 70" HIGH FENCE TYPE 2 (SEE 3/A-661)
10. 52" HIGH FENCE TYPE 1 (SEE 3/A-661)
11. 3'-0"X4'-4" METAL GATE

DESIGNED Y.RYZHKOVA	1	04.01.09	ADDENDUM 1 – VALUE ENGINEERING	
DRAWN G.ZUBERI	ISSUED	02.25.09		
CHECKED M.KNIGHT	REVISION	DATE	DESCRIPTION	BY / APP

CERTIFICATION

PROJECT DRAWINGS — ARCHITECTURE

BUILDING SECTIONS

DRAWING NO. **A-302**

WARD 1 SENIOR WELLNESS CENTER
3531 Georgia Ave., N.W.
Washington, D.C.

CHIEF DESIGN & ENGINEERING DIVISION — DATE

REGISTRATION No. — DATE

ARCHITECT — DATE

GOVERNMENT OF THE DISTRICT OF COLUMBIA
OFFICE OF PROPERTY MANAGEMENT

PROJECT NO. EA 129 C
BLDG NO.
DATE 11.02.06
SHEET NO 33 OF 98

0515_CD\DWG\ARCH DWG\PLOT DWGS\0515_A302.dwg

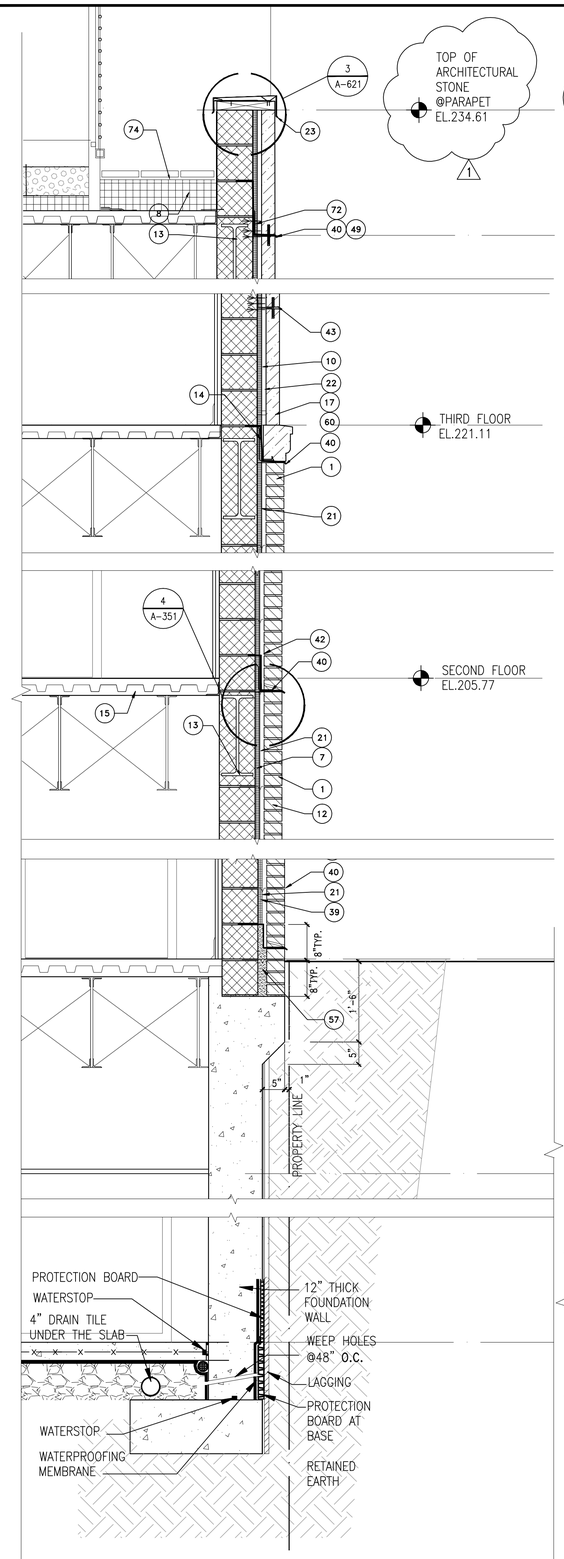

3 / A-352 **WALL SECTION**
SCALE: 3/4"=1'-0"

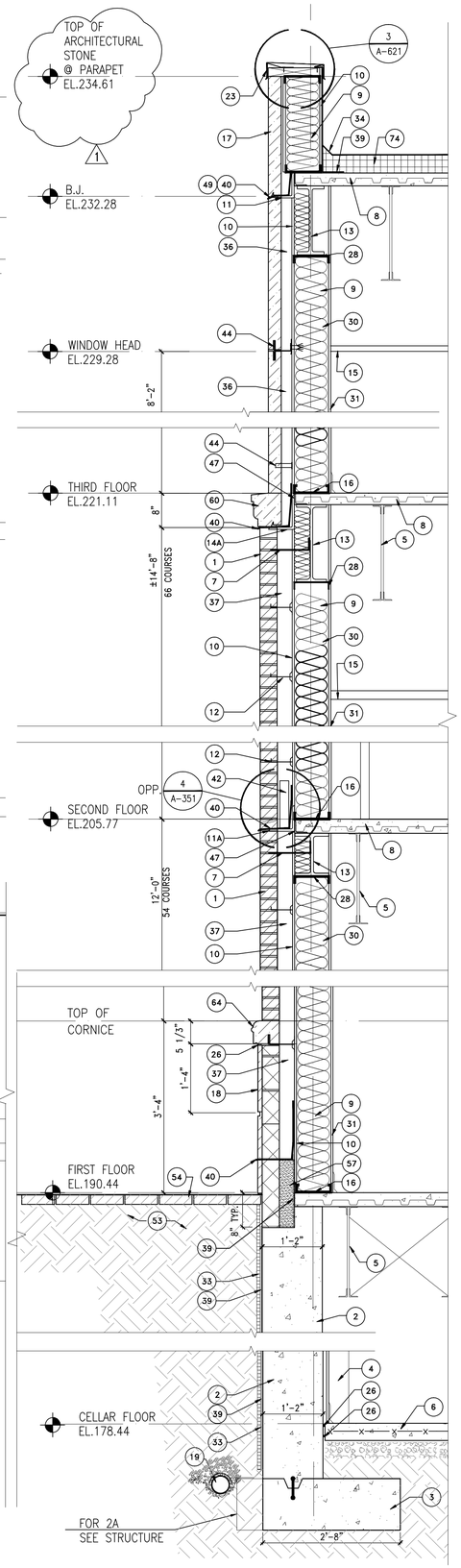

2A / A-352 — 2 / A-352 **WALL SECTION**
SCALE: 3/4"=1'-0"

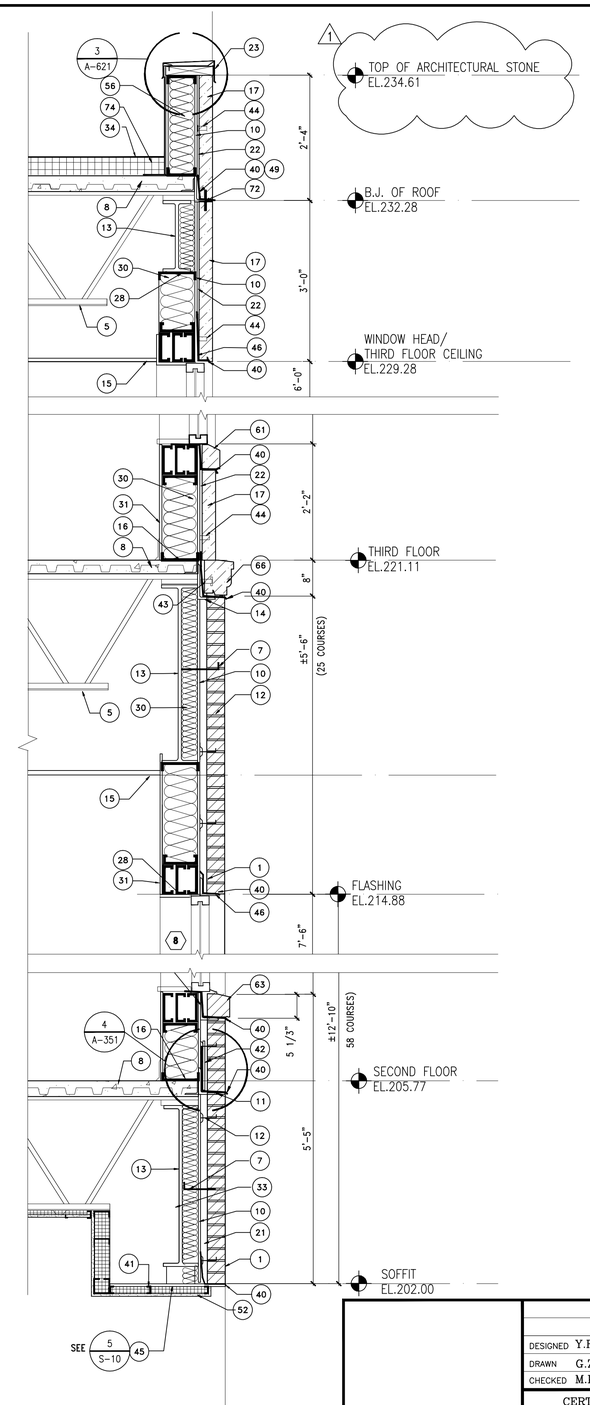

1 / A-352 **WALL SECTION**
SCALE: 3/4"=1'-0"

MATERIAL LEGEND

1. 4" FACE BRICK
2. CONCRETE FOUNDATION WALL. SEE STRUCTURE DRAWINGS
3. CONCRETE FOOTING – SEE STRUCTURE DRAWINGS
4. 1'-6" CONCRETE PIER
5. STEEL JOIST – SEE S-2, S-3
6. 4" REINFORCED CONCRETE SLAB ON 6 MIL.POLYETHYLENE VAPOR BARRIER OVER 4" WASHED GRAVEL ON COMPACTED FILL
7. ADJUSTABLE ANCHOR WELDED TO BEAM
8. CONCRETE ON METAL DECK. SEE STRUCTURE
9. 8" METAL STUD 16 GA. AT 16" O.C.
10. BUILDING PAPER ON THE EXTERIOR GRADE ½" SHEATHING
11. CONT. 6x4x5/16 STEEL ANGLE W/SPRAY ON FIREPROOFING (WELDED)
11A. CONT. 6x6x5/16 STEEL ANGLE W/SPRAY ON FIREPROOFING (WELDED)
12. ADJUSTABLE TIES @16" O.C (TYP.) AT METAL STUDS
13. STEEL BEAM (SEE STRUCTURE)
14. CONT. 8x4x5/16 STEEL ANGLE W/SPRAY ON FIREPROOFING (WELDED TO EMBEDDED ANGEL)
14A. CONT. 8x6x5/16 STEEL ANGLE W/SPRAY ON FIREPROOFING (WELDED TO EMBEDDED ANGEL)
15. ACOUSTICAL TILE CEILING
16. 8" METAL RUNNER 16 GA
17. 3" ARCHITECTURAL STONE PANEL
18. 1" THIN STONE VENEER SAWN ASHLAR ARCHITECTURAL STONE W/1" HORIZONTAL RUSTICATION
19. 4" DRAIN TILE WRAPPED W/FILTER FABRIC, SURROUNDED BY GRAVEL BED. SEE SPEC.
20. ROOF DRAIN. SEE DETAIL 2/A-621
21. 2" AIR SPACE
22. 1" AIR SPACE
23. METAL COPING
24. 4" CMU
25. 5/8 GYPSUM BOARD ON 7/8 FURRING CHAIN
26. SEALANT
27. TUBE STEEL – SEE STRUCTURE
28. 8" METAL TRACK 16 GA
29. ALUMINUM CLAD WOOD TRIM (EXTERIOR ONLY)
30. R-19 INSULATION
31. 5/8 GYPSUM BOARD
32. STEEL BRACKET – SEE DETAIL 2/A-661
33. RIGID INSULATION
34. THERMOPLASTIC ROOF
35. 4 x 4 x 1/4 STEEL ANDLE ATTACHED TO STUDS @ 16" O.C.
36. 3" AIR SPACE
37. 4" AIR SPACE
38. GUARD RAIL /FENCE– SEE DETAIL 4/A-661
39 WATERPROOFING MEMBRANE (6" MIN ABOVE THE GRADE)
40. METAL FLASHING W/WEEPHOLES @ 24" O.C.(TYP.) EXTEND VERTICALLY 8" MIN
41. STEEL CHANNEL
42. MORTAR NET
43. SPLIT TAB ANCHOR 'B'
44. STEEL SPLIT TAIL-ANCHOR IN EACH VERTICAL JOINT (SHIM AS REQUIRED)
45. STEEL PLATE WELDED TO THE BEAM
46. 5 x 3 1/2 x1/4 STEEL LINTEL
47. EMBEDDED CONT. 3 x 4 x1/4 STEEL ANGLE
48. HORIZONTAL STEEL PLATE
49. SEALANT WITH BACKER ROD WITH WEEPS
50. CONT. 8x6x5/16 STEEL ANGLE W/SPRAY ON FIREPROOFING (WELDED TO EMBEDDED ANGLE)
51. HORIZONTAL AND VERTICAL STEEL PLATES WELDED TO THE BEAM TO FORM ARCH
52. CEMENT BOARD
53. BACKFILL
54. BRICK PAVERS
55. GRAVEL STOP – SEE DETAIL 7/A-621
56. 6" METAL STUD 16 GA, @16" O.C
57. MORTAR FILL
58. 6" CMU
59. WATER STOP
60. ARCHITECTURAL STONE CORNICE TYPE 1C– SEE SHEET A-662
61. ARCHITECTURAL STONE SILL TYPE 3A – SEE SHEET A-662
62. ARCHITECTURAL STONE SILL TYPE 3C – SEE SHEET A-662
63. ARCHITECTURAL STONE SILL TYPE 3B – SEE SHEET A-662
64. ARCHITECTURAL STONE BAND TYPE 2B – SEE SHEET A-662
65. ARCHITECTURAL STONE BAND TYPE 2A – SEE SHEET A-662
66. ARCHITECTURAL STONE CORNICE TYPE 1D – SEE SHEET A-662
67. STEEL PLATE AT ARCH ONLY
68. GYPSUM BOARD CEILING
69. SEALANT AND BACKER ROD AT EXPANSION JOINT
70. 1" HIGH MIN RIGID NONBIODEGRADABLE CANT WITH LIQUID MEMBRANE COATING AT TOP SURFACE
71. SILL FLASHING
72. CONT. 3 1/2 x 2 1/2 x 5/16 STEEL ANGLE W/SPRAY ON FIREPROOFING (WELDED)
73. ARCHITECTURAL STONE SILL TYPE 3D – SEE SHEET A-662
74. TAPERED INSULATION – 4" MIN., U.O.N
75. RIVER ROCK
76 DISCHAGE PIPE @48" O.C.
77. BENTOSEAL
78. PROTECTION BOARD
79. HYDROBAR TUBES
80. LAGGING

NOTE

ALL ARCHITECTURAL STONE INSTALLATIONS/CONNECTIONS METHOD TO CONFORM WITH MANUFACTURER'S SPECIFICATIONS

DESIGNED Y.RYZHKOVA	1	04.01.09	ADDENDUM 1 – VALUE ENGINEERING	
DRAWN G.ZUBERI	ISSUED	02.25.09		
CHECKED M.KNIGHT	REVISION	DATE	DESCRIPTION	BY / APP

CERTIFICATION

PROJECT DRAWINGS

ARCHITECTURE

WALL SECTIONS

DRAWING NO. A-352

WARD 1 SENIOR WELLNESS CENTER
3531 Georgia Ave., N.W.
Washington, D.C.

CHIEF DESIGN & ENGINEERING DIVISION

DATE

REGISTRATION No.

DATE

ARCHITECT

DATE

GOVERNMENT OF THE DISTRICT OF COLUMBIA
OFFICE OF PROPERTY MANAGEMENT

PROJECT NO. EA 129 C

BLDG NO.

DATE 11.02.06

SHEET NO 35 OF 98

0515_SD\DWG\ARCH DWG\PLOT DWGS\0515_A352.dwg

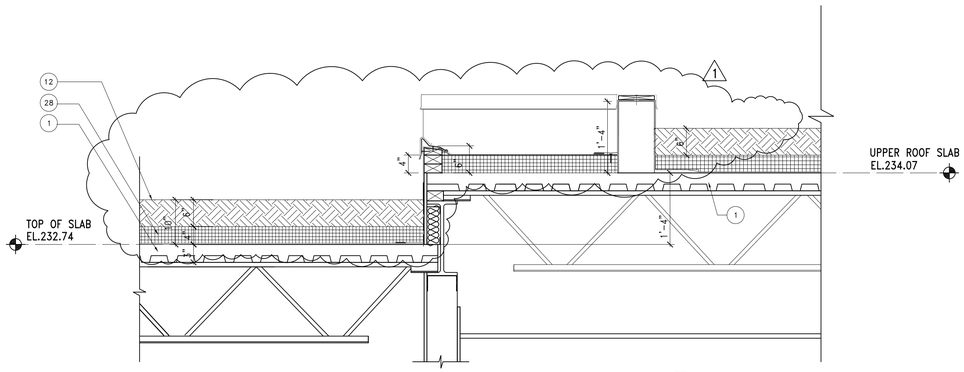

6 A-406 SECTION
SCALE: 3/4"=1'-0"

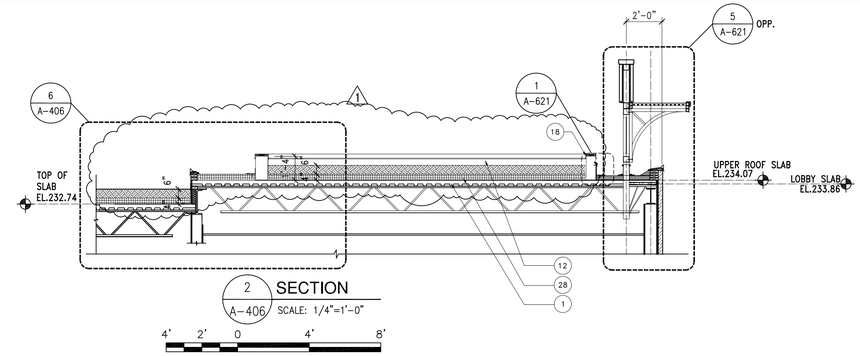

2 A-406 SECTION
SCALE: 1/4"=1'-0"

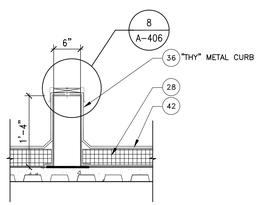

11 A-406 TYP. RTU. CURB DETAIL
SCALE: 3/4"=1'-0"

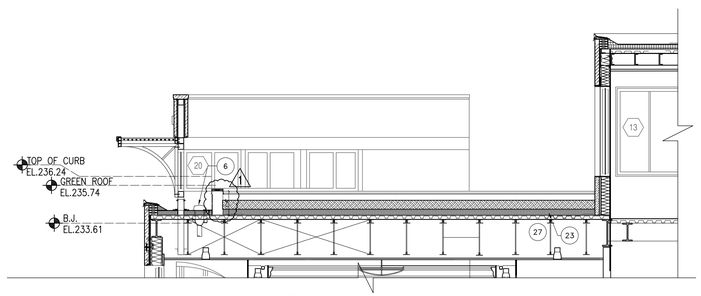

5 A-406 SECTION
SCALE: 1/4"=1'-0"

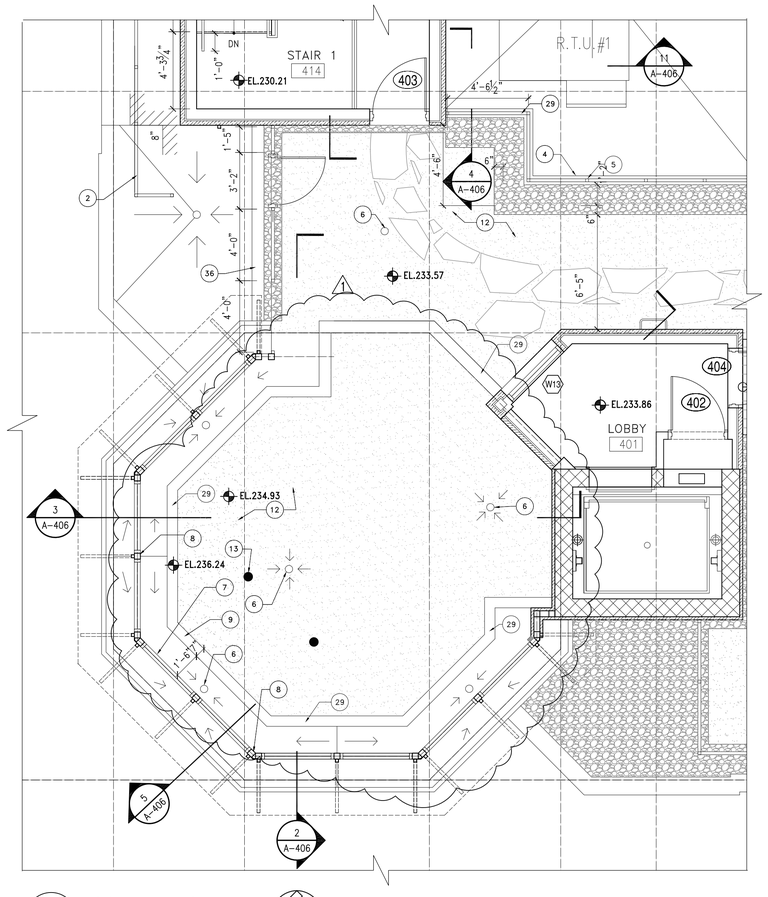

1 A-406 ROOF ENLARGE PLAN
SCALE: 1/4"=1'-0"

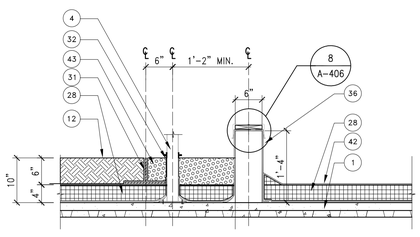

4 A-406 SECTION
SCALE: 3/4"=1'-0"

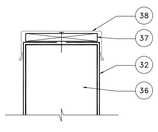

8 A-406 CAP DETAIL
SCALE: 1 1/2"=1'-0"

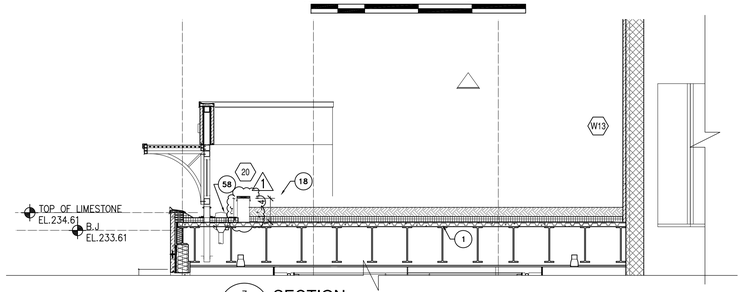

3 A-406 SECTION
SCALE: 1/4"=1'-0"

LEGEND

- SEEDING
- GRAVEL
- PVC ROOF
- BRICK PAVERS
- WOOD DECK
- POND

LEGEND

1. CONCRET SLAB
2. 52" HIGH FENCE TYPE 1– (SEE 3/A–661)
3. WOOD STAIR
4. 70" FENCE TYPE 2 (SEE 3/A–661)
5. 2½" ø FENCE POST
6. 5"ø ROOF DRAIN BELOW WALL. SEE SECTION ON SHEET A–622
7. 10" WIDE WALL FOR SHADE SUPPORT
8. SHADE POST
9. NOT USED
10. NOT USED
11. NOT USED
12. GREEN ROOF. SEE SHEET A–622
13. 6"ø BOLLARD LIGHT
14. NOT USED
15. NOT USED
16. NOT USED
17. NOT USED
18. NOT USED
19. PLANTING BED
20. NOT USED
21. NOT USEDEPS INSULATING BOARD – 1½" THICK
22. INSULATION CONCRETE – 4" MIN.
23. EPS INSULATION BOARD – 1 1/2" THICK
24. NOT USED
25. WEEP HOLES
26. WATER PROOFING
27. NOT USED
28. INSULATION
29. METAL CURB SEE 4/A–406
30. NOT USED
31. FLASHING
32. 2"X11" WOOD TREAD
33. NOT USED
34. NOT USED
35. BOOLT
36. 6"X16" METAL CURB
37. 1X8 BLOCKING
38. METAL CAP
39. 1X1 BALUSTER
40. 2X6 SUPPORT
41. STEEL ANGLE
42. PVC ROOF
43. GRAVEL
44. 2X6 WOOD NAILER

NOTE

1. STAIR TO BE INSTALLED AFTER MANUFACTURER HAS MADE FINAL INSPECTION ON THE SECTION OF ROOFING WHERE STAIR TO BE PUT IN PLACE.
2. PROVIDE PROTECTIVE LAYERS SARNA NWP–HD & G445 OVER SPECIFIED AREA OF FINISHED ROOF PRIOR TO INSTALLATION OF NEW WOOD DECK ON UPPER ROOF.

DESIGNED Y.RYZHKOVA	1	04.01.09	ADDENDUM 1 – VALUE ENGINEERING		
DRAWN	ISSUED	02.25.09			
CHECKED M.KNIGHT	REVISION	DATE	DESCRIPTION	BY	APP

CERTIFICATION

PROJECT DRAWINGS

ARCHITECTURE

WARD 1 SENIOR WELLNESS CENTER
3531 Georgia Ave., N.W.
Washington, D.C.

DRAWING NO.
A-406

CHIEF DESIGN & ENGINEERING DIVISION
DATE

REGISTRATION No.
DATE
ARCHITECT
DATE

GOVERNMENT OF THE DISTRICT OF COLUMBIA
OFFICE OF PROPERTY MANAGEMENT

PROJECT NO. EA 129 C
BLDG NO.
DATE 11.02.06
SHEET NO OF 98

0515_SD\DWG\ARCH DWG\PLOT DWGS\0515_A406.dwg

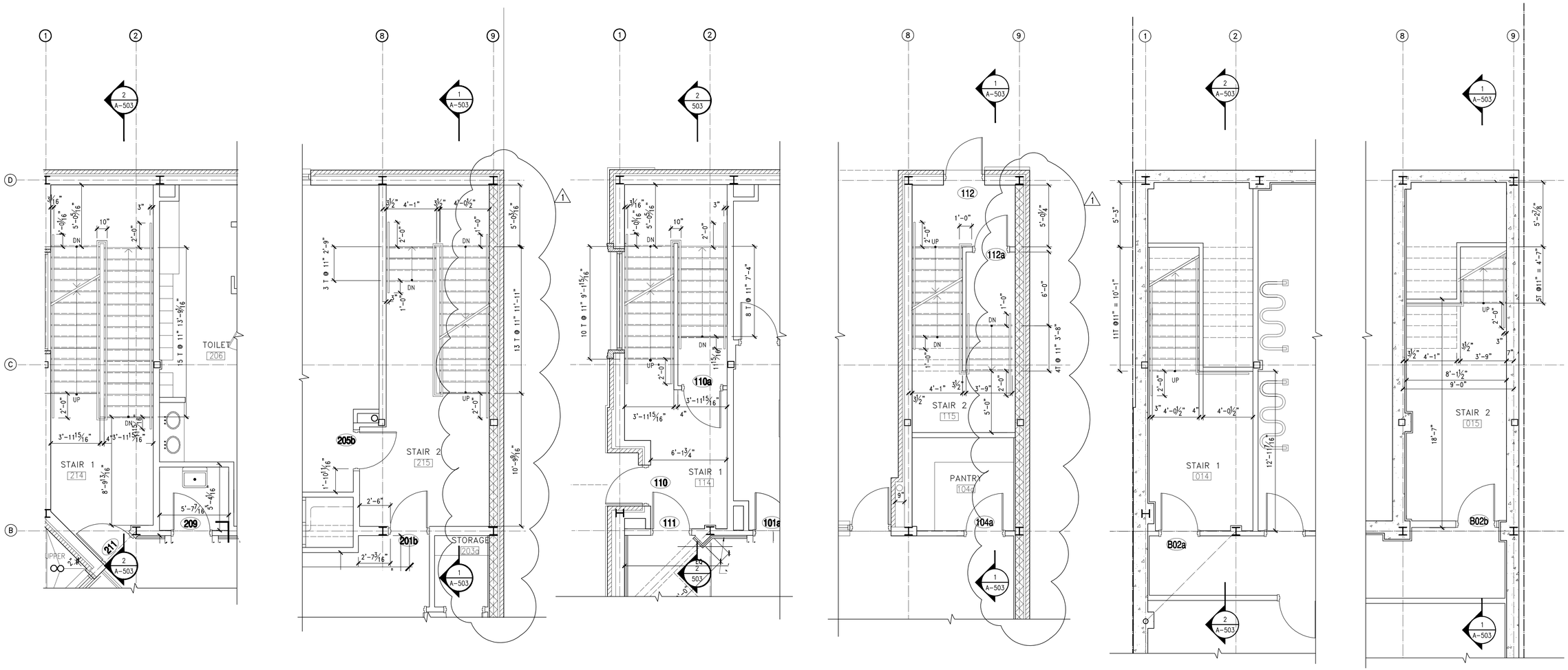

6 A-501 **SECOND FLOOR PLAN - STAIR 1**
SCALE: 1/4"=1'-0"
GRAPHIC SCALE

5 A-501 **SECOND FLOOR PLAN - STAIR 2**
SCALE: 1/4"=1'-0"
GRAPHIC SCALE

4 A-501 **FIRST FLOOR PLAN - STAIR 1**
SCALE: 1/4"=1'-0"
GRAPHIC SCALE

3 A-501 **FIRST FLOOR PLAN - STAIR 1**
SCALE: 1/4"=1'-0"
GRAPHIC SCALE

2 A-501 **CELLAR FLOOR PLAN - STAIR 2**
SCALE: 1/4"=1'-0"
GRAPHIC SCALE

1 A-501 **CELLAR FLOOR PLAN - STAIR 2**
SCALE: 1/4"=1'-0"
GRAPHIC SCALE

NOTE

1. SEE DOOR SCHEDULE FOR DETAILS
2. SEE DWG A-504 TREAD, RISER, GUARDRAIL, AND HANDRAIL DETAILS

DESIGNED Y.RYZHKOVA	1	04.01.09	ADDENDUM 1 – VALUE ENGINEERING	
DRAWN G.ZUBERI	ISSUED	02.25.09		
CHECKED M.KNIGHT	REVISION	DATE	DESCRIPTION	BY / APP

CERTIFICATION

PROJECT DRAWINGS — ARCHITECTURE

ENLARGE STAIR PLANS

WARD 1 SENIOR WELLNESS CENTER
3531 Georgia Ave., N.W.
Washington, D.C.

DRAWING NO. **A-501**

CHIEF DESIGN & ENGINEERING DIVISION — DATE

REGISTRATION No. — DATE

ARCHITECT — DATE

GOVERNMENT OF THE DISTRICT OF COLUMBIA
OFFICE OF PROPERTY MANAGEMENT

PROJECT NO. EA 129 C
BLDG NO.
DATE 11.02.06
SHEET NO 42 OF 98

0515_CD\DWG\ARCH DWG\PLOT DWGS\0515_A501.dwg

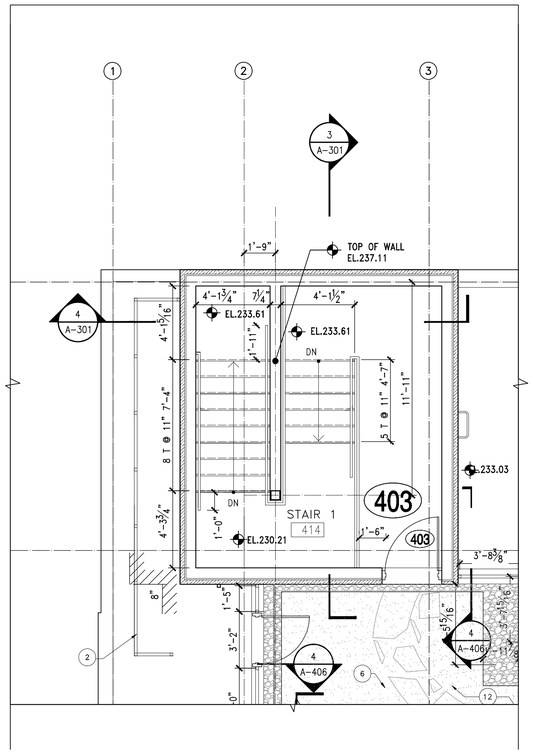

4 A-502 **GREEN ROOF PLAN - STAIR 1**
SCALE: 1/4"=1'-0"

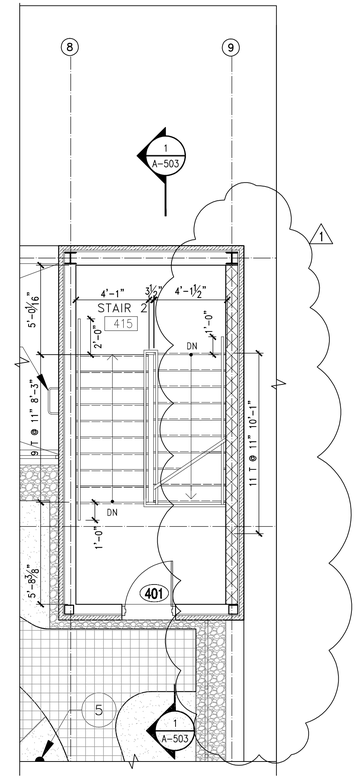

3 A-502 **GREEN ROOF PLAN - STAIR 2**
SCALE: 1/4"=1'-0"

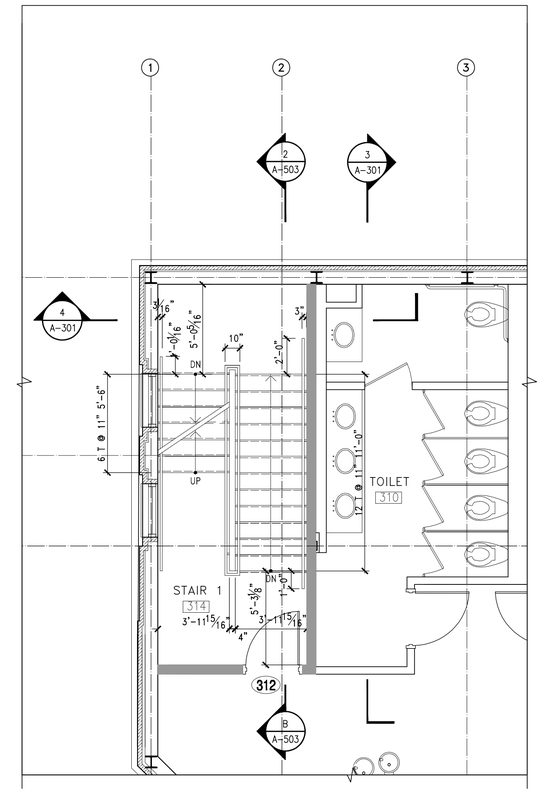

2 A-502 **THIRD FLOOR STAIR 1 PLAN**
SCALE: 1/4"=1'-0"

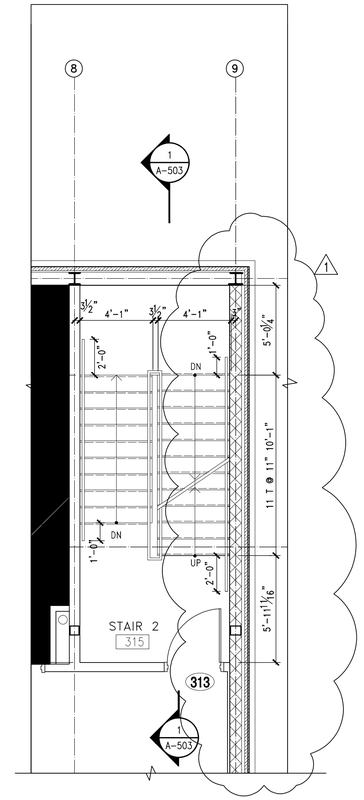

1 A-502 **THIRD FLOOR PLAN - STAIR 2**
SCALE: 1/4"=1'-0"

NOTE

1. SEE DOOR SCHEDULE FOR DETAILS
2. SEE DWG A-504 FOR TREAD, RISER, GUARDRAIL, AND HANDRAIL DETAILS

DESIGNED Y.RYZHKOVA	1	04.01.09	ADDENDUM 1 – VALUE ENGINEERING	
DRAWN G.ZUBERI	ISSUED	02.25.09		
CHECKED M.KNIGHT	REVISION	DATE	DESCRIPTION	BY / APP

CERTIFICATION

PROJECT DRAWINGS

ARCHITECTURE

ENLARGED STAIR PLANS

DRAWING NO.

WARD 1 SENIOR WELLNESS CENTER
3531 Georgia Ave., N.W.
Washington, D.C.

A-502

CHIEF DESIGN & ENGINEERING DIVISION

DATE

REGISTRATION No.
DATE

ARCHITECT
DATE

GOVERNMENT OF THE DISTRICT OF COLUMBIA
OFFICE OF PROPERTY MANAGEMENT

PROJECT NO. EA 129 C
BLDG NO.
DATE 11.02.06
SHEET NO 43 OF 98

0515_CD\DWG\ARCH DWG\PLOT DWGS\0515_A502.dwg

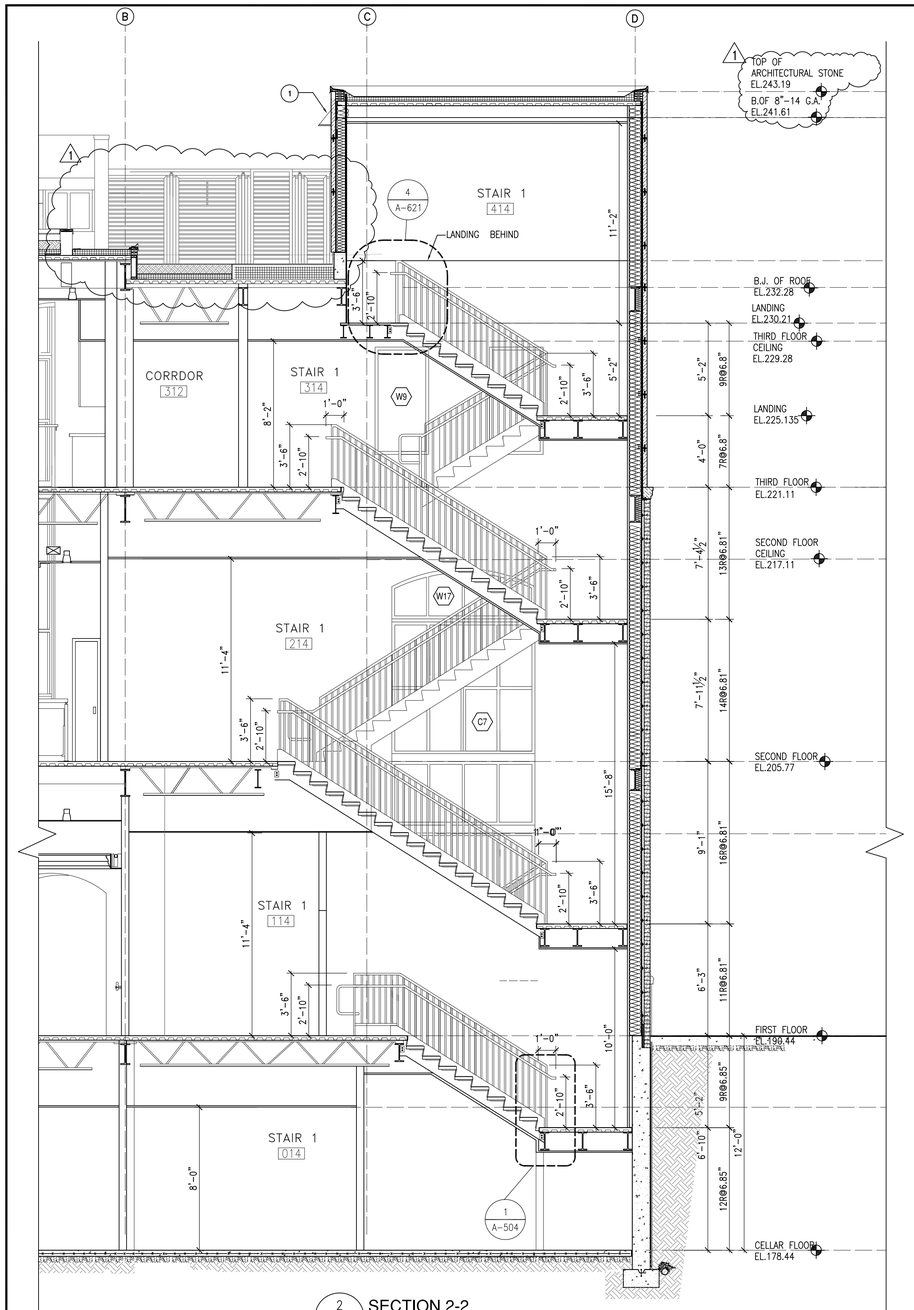

2 A-503 SECTION 2-2
SCALE: 1/4"=1'-0"

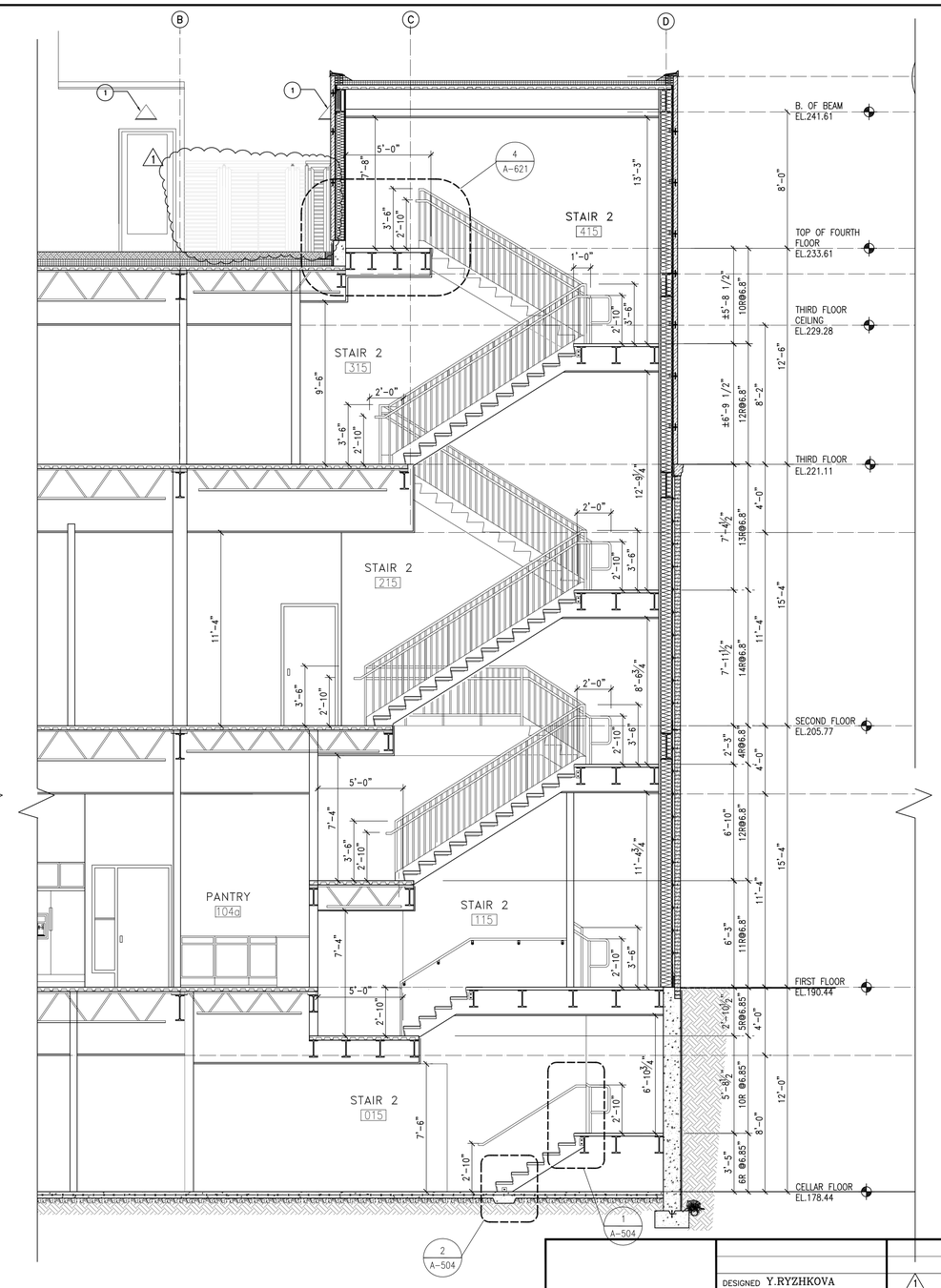

1 A-503 SECTION 1-1
SCALE: 1/4"=1'-0"

DESIGNED Y.RYZHKOVA	1	04.01.09	ADDENDUM 1 – VALUE ENGINEERING		
DRAWN G.ZUBERI	ISSUED	02.25.09			
CHECKED M.KNIGHT	REVISION	DATE	DESCRIPTION	BY	APP

CERTIFICATION

PROJECT DRAWINGS

ARCHITECTURE

ENLARGED STAIR SECTIONS

DRAWING NO.

A-503

WARD 1 SENIOR WELLNESS CENTER
3531 Georgia Ave., N.W.
Washington, D.C.

CHIEF DESIGN & ENGINEERING DIVISION

DATE

REGISTRATION No.

DATE

ARCHITECT

DATE

GOVERNMENT OF THE DISTRICT OF COLUMBIA
OFFICE OF PROPERTY MANAGEMENT

PROJECT NO. EA 129 C

BLDG NO.

DATE 11.02.06

SHEET NO 44 OF 98

0515_CD\DWG\ARCH DWG\PLOT DWGS\0515_A503.dwg

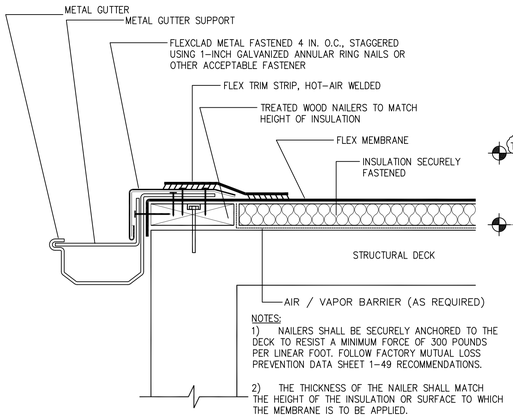

NOTES:

1) NAILERS SHALL BE SECURELY ANCHORED TO THE DECK TO RESIST A MINIMUM FORCE OF 300 POUNDS PER LINEAR FOOT. FOLLOW FACTORY MUTUAL LOSS PREVENTION DATA SHEET 1-49 RECOMMENDATIONS.

2) THE THICKNESS OF THE NAILER SHALL MATCH THE HEIGHT OF THE INSULATION OR SURFACE TO WHICH THE MEMBRANE IS TO BE APPLIED.

3) VAPOR BARRIER SHALL BE SEALED AT EDGES.

8 / A-621 FACE MOUNTED GUTTER EDGE DETAIL

SCALE: NTS

1"=1'-0" 12" 9" 6" 3" 0 1' 2'

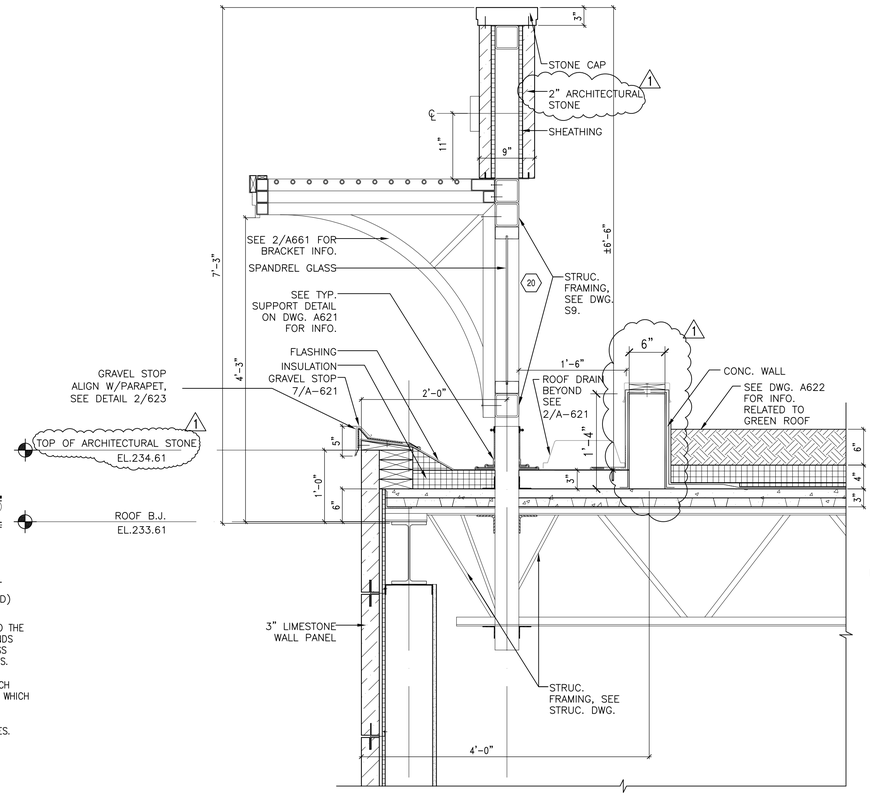

5 / A-621 HIGH ROOF DETAIL

SCALE: 1"=1'-0"

1"=1'-0" 12" 9" 6" 3" 0 1' 2'

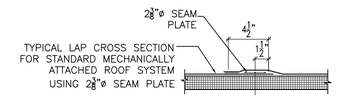

LAP SEAM DETAIL (TYP.)

SCALE: 1-1/2"=1'-0"

1 1/2"=1'-0" 12" 9" 6" 3" 0 1'

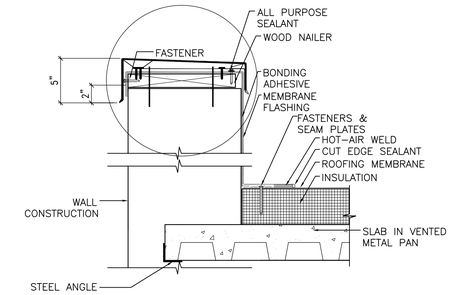

3 / A-621 PARAPET DETAIL

SCALE: 1 1/2"=1'-0"

1 1/2"=1'-0" 12" 9" 6" 3" 0 1'

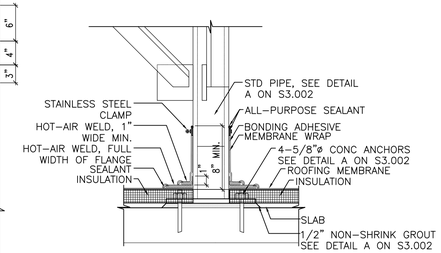

SUPPORT DETAIL (TYP.)

SCALE: 1-1/2"=1'-0"

1 1/2"=1'-0" 12" 9" 6" 3" 0 1'

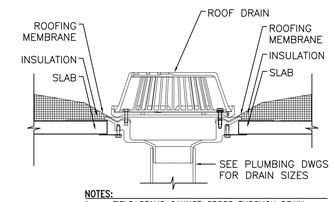

NOTES:

1. FIELD SEAMS CANNOT CROSS THROUGH DRAIN CLAMPING RING AREA.
2. DRAIN MUST HAVE FUNCTIONAL CLAMPING RING.
3. EXTEND MEMBRANE 1 1/2" BEYOND DRAIN BOLTS (DO NOT "NOTCH" MEMBRANE). CUT HOLE IN MEMBRANE TO APPROPRIATE BOLT DIAMETER & INSERT BOLT.

2 / A-621 ROOF DRAIN DETAIL

SCALE: 1 1/2"=1'-0"

1 1/2"=1'-0" 12" 9" 6" 3" 0 1'

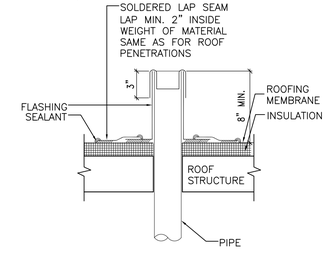

PIPE PENETRATION DETAIL (TYP.)

SCALE: 1-1/2"=1'-0"

1 1/2"=1'-0" 12" 9" 6" 3" 0 1'

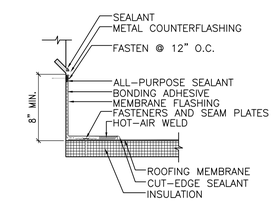

1 / A-621 REGLET DETAIL

SCALE: 1 1/2"=1'-0"

1 1/2"=1'-0" 12" 9" 6" 3" 0 1'

NOTE:

ANCHORING OF ALL BRICKWORK AND STONEWORK MUST CONFORM WITH MANUFACTURERS SPECIFICATIONS.

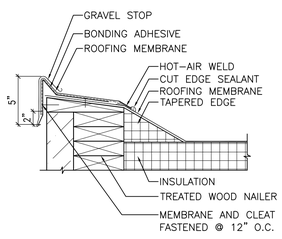

7 / A-621 GRAVEL STOP DETAIL

SCALE: 1 1/2"=1'-0"

1 1/2"=1'-0" 12" 9" 6" 3" 0 1'

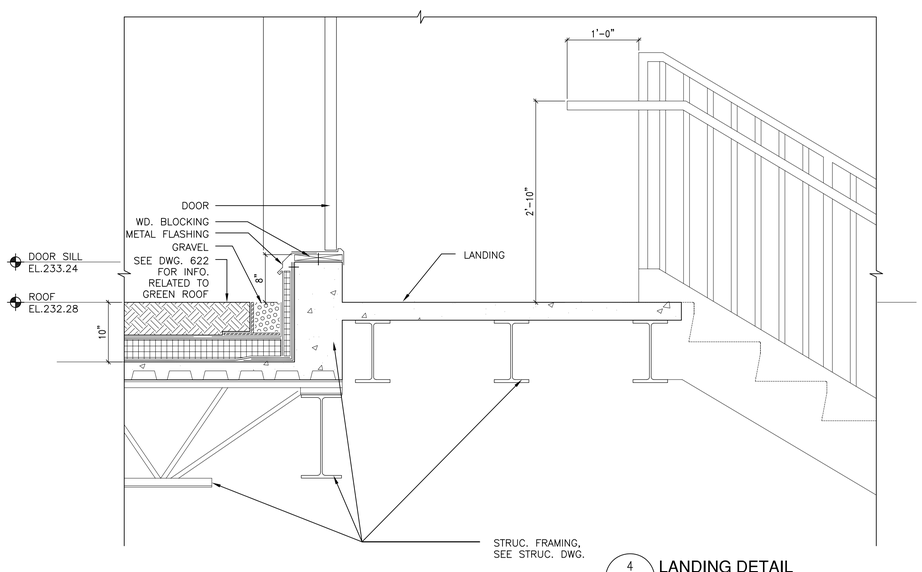

4 / A-621 LANDING DETAIL

SCALE: 1"=1'-0"

1"=1'-0" 12" 9" 6" 3" 0 1' 2'

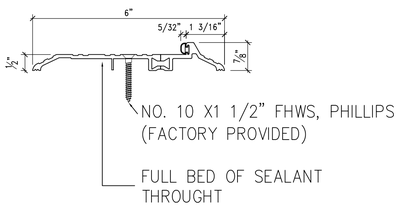

6 / A-621 THRESHOLD DETAIL

SCALE: 6"=1'-0"

6"=1'-0" 6" 5" 4" 3" 2" 1" 0

DESIGNED Y.RYZHKOVA	1	04.01.09	ADDENDUM 1 – VALUE ENGINEERING		
DRAWN	ISSUED	02.25.09			
CHECKED M.KNIGHT	REVISION	DATE	DESCRIPTION	BY	APP

CERTIFICATION

PROJECT DRAWINGS

ARCHITECTURE

WARD 1 SENIOR WELLNESS CENTER
3531 Georgia Ave., N.W.
Washington, D.C.

DRAWING NO. A-621

CHIEF DESIGN & ENGINEERING DIVISION

DATE

REGISTRATION No.

DATE

ARCHITECT

DATE

GOVERNMENT OF THE DISTRICT OF COLUMBIA
OFFICE OF PROPERTY MANAGEMENT

PROJECT NO. EA 129 C

BLDG NO.

DATE 09.25.06

SHEET NO 45 OF 98

0515_CD\DWG\ARCH DWG\PLOT DWGS\0515_A621.dwg

NOTES

1. ANCHORING OF ALL BRICKWORK AND ARCHITECTURAL STONEWORK MUST CONFORM WITH MANUFACTURERS SPECIFICATIONS

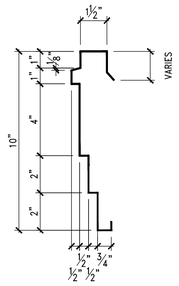

10 A-661 **DETAIL**
SCALE: 3"=1'-0"

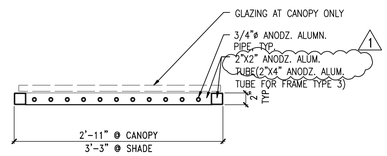

9 A-661 **SECTION**
SCALE: 1"=1'-0"

1"=1'-0" 12" 9" 6" 3" 0 1' 2'

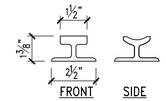

6 A-661 **DETAIL @ FENCE**
SCALE: 3"=1'-0"

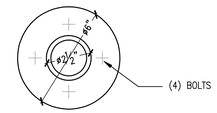

5 A-661 **SECTION @ FENCE**
SCALE: 3"=1'-0"

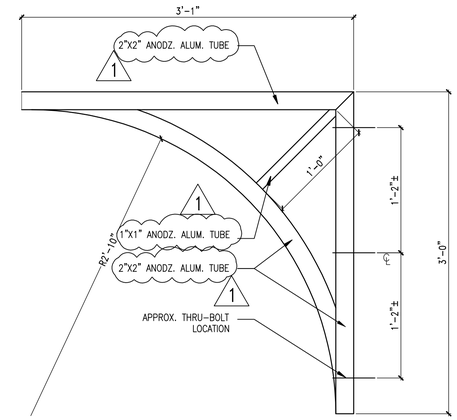

2 A-661 **CANOPY/SHADE BRACKET - SIDE VIEW**
SCALE: 1"=1'-0"

1"=1'-0" 12" 9" 6" 3" 0 1' 2'

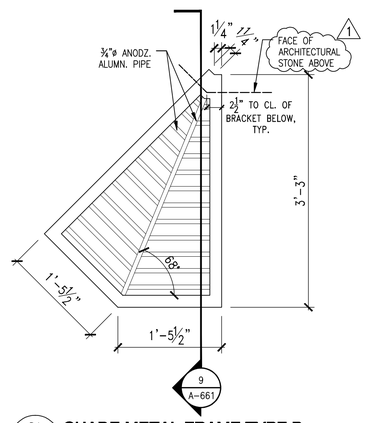

8A A-661 **SHADE METAL FRAME TYPE B**
SCALE: 1"=1'-0"

1"=1'-0" 12" 9" 6" 3" 0 1' 2'

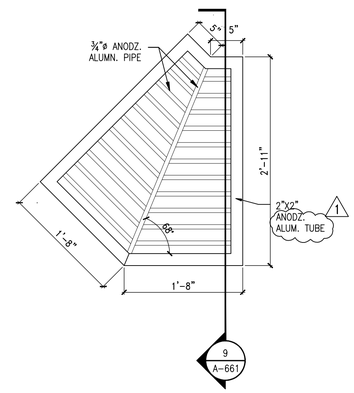

8 A-661 **CANOPY METAL FRAME TYPE 2**
SCALE: 1"=1'-0"

1"=1'-0" 12" 9" 6" 3" 0 1' 2'

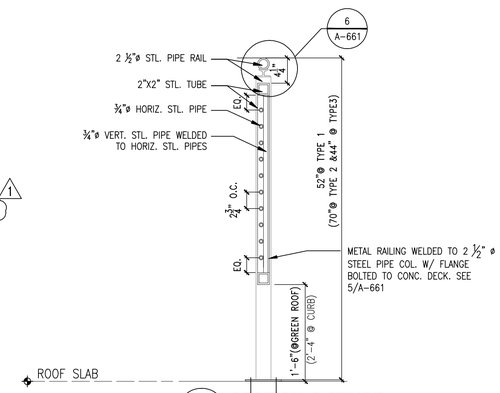

4 A-661 **SECTION @ FENCE**
SCALE: 1"=1'-0"

1"=1'-0" 12" 9" 6" 3" 0 1' 2'

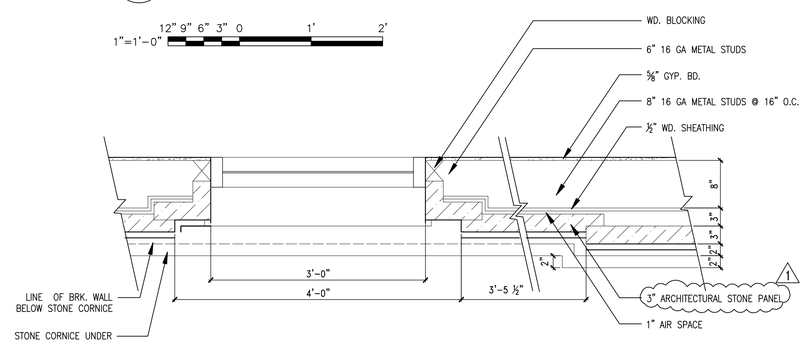

1 A-661 **DETAIL AT BUMP OUT**
SCALE: 1"=1'-0"

1"=1'-0" 12" 9" 6" 3" 0 1' 2'

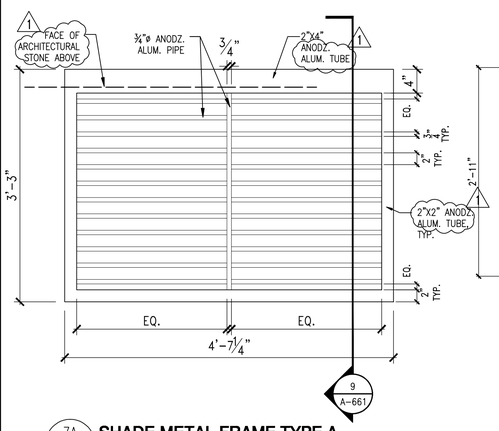

7A A-661 **SHADE METAL FRAME TYPE A**
SCALE: 1"=1'-0"

1"=1'-0" 12" 9" 6" 3" 0 1' 2'

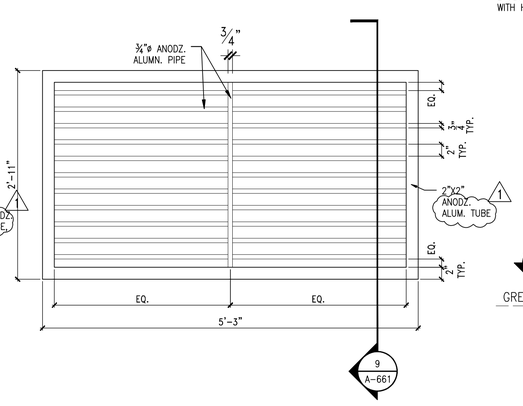

7 A-661 **CANOPY METAL FRAME TYPE 1**
SCALE: 1"=1'-0"

1"=1'-0" 12" 9" 6" 3" 0 1' 2'

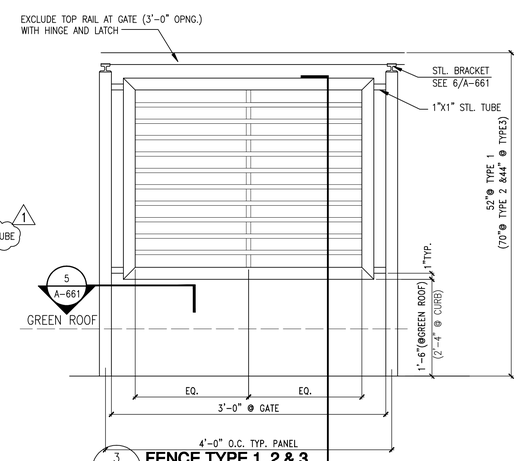

3 A-661 **FENCE TYPE 1, 2 & 3**
SCALE: 1"=1'-0"

1"=1'-0" 12" 9" 6" 3" 0 1' 2'

DESIGNED Y.RYZHKOVA	1	04.01.09	ADDENDUM 1 – VALUE ENGINEERING	
DRAWN H.CHO	ISSUED	02.25.09		
CHECKED M.KNIGHT	REVISION	DATE	DESCRIPTION	BY / APP

CERTIFICATION

PROJECT DRAWINGS — ARCHITECTURE

EXTERIOR ELEVATION DETAILS

WARD 1 SENIOR WELLNESS CENTER
3531 Georgia Ave., N.W.
Washington, D.C.

DRAWING NO. **A-661**

CHIEF DESIGN & ENGINEERING DIVISION — DATE

REGISTRATION No. — DATE

ARCHITECT — DATE

GOVERNMENT OF THE DISTRICT OF COLUMBIA
OFFICE OF PROPERTY MANAGEMENT

PROJECT NO. EA 129 C
BLDG NO.
DATE 11.02.06
SHEET NO 51 OF 98

0515_CD\DWG\ARCH DWG\PLOT DWGS\0515_A661.dwg

FURNITURE, FIXTURE, AND EQUIPMENT SCHEDULE

NO.	NAME	MATERIAL	SIZE IN INCHES W	D	H	LOCATION	COMMENTS
F1A	BASE CABINETS & PLAM COUNTER TOP	WD	-	-	36	103, 104, 301	SEE SHEET A-402 FOR WIDTH & DEPTH
F1B	WALL CABINETS & SHELVING		-	-	30	103, 104, 301	SEE SHEET A-402 FOR WIDTH & DEPTH
F2	LOCKERS	AL	12	12	72	206, 208	SEE SHEET A-401 (TOILET PLANS)
F3A	STORAGE SHELVING	WD	-	24	-	104A	(SEE DWG. 12/A-861)
F3B	STORAGE SHELVING	WD	-	16	-	203A	(SEE DWG. 12/A-861)
F3C	STORAGE SHELVING	WD	-	15	-	203A	(SEE DWG. 12/A-861)
F4	TACK BOARD	AL	48	-	48	103, 104, 105, 301, 303, 306	
F5	PROJECTION SCREEN	MTL	70	-	70	104, 205, 303 AND 306 (SEE A-101 AND A-102)	MANUAL 10" AND MOTORIZED 14" FROM WALL/CENTER OF ROOM)
F6	SOAP DISPENSER	MTL	-	-	-	B06, B07, 106, 107, 206, 207, 309,310	SEE SHEET A-401 (TOILET PLANS) FOR LOCATION
F7	TOWEL DISPENSER & DISPOSAL, RECESSED	MTL	13	4 1/2	56	B06, B07, 106, 107, 206, 207, 309,310	SEE SHEET A-401 (TOILET PLANS) FOR LOCATION
F8A	MIRROR	MTL	30	-	42	B06, B07, 106, 107, 207, 309,310	SEE SHEET A-401 (TOILET PLANS) FOR LOCATION
F8B	MIRROR	MTL	54	-	42	207	SEE SHEET A-401 (TOILET PLANS) FOR LOCATION
F8C	MIRROR	MTL	84	-	48		
F8D	MIRROR	MTL	184	-	96		
F8E	MIRROR	MTL	36	-	72		
F9	GRAB BAR	MTL	-	-	-	B06, B07, 106, 107, 206, 207, 309,310	SEE SHEET A-401 (TOILET PLANS) FOR WIDTH AND LOCATION
F10	TISSUE PAPER DISPENSER W/SANITARY DISPOSAL	MTL	17 1/2	4 1/2	19 1/2	B06, B07, 106, 107, 206, 207, 309,310	SEE SHEET A-401 (TOILET PLANS) FOR LOCATION
F11	MOP RACK, SURFACE MOUNTED	WD	-	-	-	B09, 109, 209, 311	SEE SHEET A-801 & A-802 FOR LOCATION
F12	SANITRY DISPENSER, SEMI-RECESSED	MTL	12	6	28 1/2	206, 310	SEE SHEET A-401 (TOILET PLANS) FOR LOCATION
F13	DUAL ACCESS SEAT COVER, TISSUE PAPER DISPENSER W/SANITARY DISPOSAL	MTL	17 1/2	6 1/2	30	309, 310	SEE SHEET A-401 (TOILET PLANS) FOR LOCATION
F14	ISLAND W/ PLAM COUNTER TOP, BASE CAB. & COOKTOP	WD	-	-	-	104	SEE SHEET A-402 FOR SIZE AND LOCATION
F15	CASEWORK-STORAGE UNIT W / 5 ADJ S	WD	-	-	-		
F16	WALL MOUNTED MONITOR BRACKET	MTL	-	-	-		
F17	FLOOR MOUNTED TOILET PARTITION W / TOP RAIL	MTL	-	-	-		SEE SHEET A-401 (TOILET PLANS) FOR LOCATION
F18	URINAL SCREEN	MTL	-	-	-	309	SEE SHEET A-401 (TOILET PLANS) FOR LOCATION
F19	FIRE EXTINGUISHER CABINET - RECESSED	MTL	16	7 3/4	32		SEE SHEET A-801 & A-802 FOR LOCATION
F20	DRINKING FOUNTAIN	MTL	-	-	-	B08, 101, 211, 312	SEE SHEET A-801 & A-802 FOR LOCATION
F21	RECEPTION COUNTER TABLE	WD	-	-	-	101A	SEE SHEET A-801 FOR LOCATION
F22	EXERCISE BAR	MTL	-	-	-	201	SEE SHEET A-802 FOR LOCATION
F23	HINGED CONFERENCE UNIT	MTL	48	-	48	103	SEE SHEET A-801 FOR LOCATION
F24	BUILDING DIRECTORY	MTL	30	-	48	101	SEE SHEET A-801 FOR LOCATION
L1	DESK, EXECUTIVE	WD	60	30	-	102, 105, 202, 302, 304, 307, 308	
L2A	TABLE, COMPUTER	WD	32	18	-	303	
L2B	TABLE, CONFERENCE	WD	96	48	-	103	
L2C	TABLE, SQUARE	WD	24	24	-	305	
L2D	TABLE, ROUND	WD	36	-	-	102, 105	
L2E	COMPUTER WORK STATION	WD	42	24	-	102, 105, 202, 302, 304, 307, 308	
L2F	TABLE	WD	60	42	-	301, 306	
L2G	TABLE	WD	84	12	-	NOT USED	
L2H	TABLE, ROUND	WD	48	-	-	NOT USED	
L3A	CHAIR, EXECUTIVE (ERGONOMIC)	-	-	-	-	102, 105, 202	
L3B	CHAIR, TASK (ERGONOMIC)	-	-	-	-	101A, 101B, 302, 304, 307, 308	
L3C	CHAIR, COMPUTER (ERGONOMIC)	-	-	-	-	303	
L3D	HIGH CHAIR, BAR	-	-	-	-	104	
L3E	BARBER CHAIR	-	-	-	-	NOT USED	
L3F	ARM CHAIR	-	-	-	-	211, 305	
L3G	CHAIR, COUCH	-	-	-	-	NOT USED	
L3H	CHAIR, ADULT	-	-	-	-	101B, 102, 103, 104, 105, 202, 301, 302, 304, 306, 307, 308	
L3J	BENCH, PLASTIC LAMINATE W/ALUMINIUM LEGS	WD	66	12	18	207	
L3K	BENCH, PLASTIC LAMINATE W/ALUMINIUM LEGS	WD	80	12	18	206	
L4	CREDENZA	-	-	-	-	NOT USED	
L5	FOUR-DRAWER FILE-CABINET	-	-	-	-	102, 105, 302, 304, 307, 308	
L6A	BOOKCASE	WD	36	12	-	102, 105, 302,	
L6B	BOOKCASE	WD	48	12	-	305, 307, 308	
L7	BILLARD TABLE	-	-	-	-	NOT USED	
L8	MASSAGE TABLE	-	-	-	-	203	

*FURNISHING LISTED L1 THRU L8 ARE NOT INCLUDED IN THIS CONTRACT

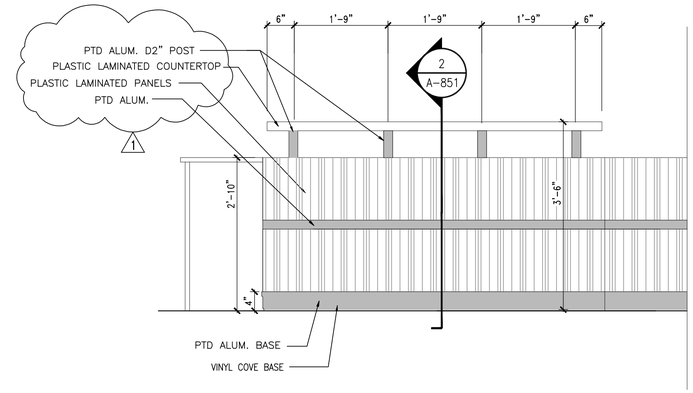

1 A-851 **RECEPTION DESK ELEVATION**
SCALE: 3/4"=1'-0"

12" 6" 0 1' 2' 3'

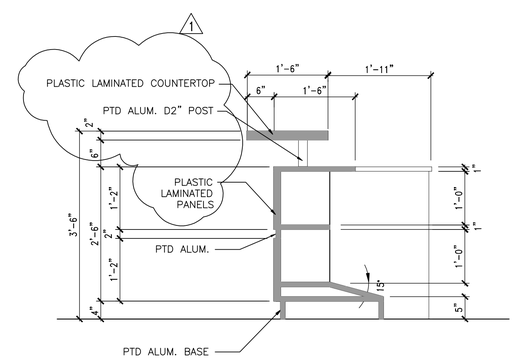

NOTE: VERIFY SIZE AT SITE

2 A-851 **SECTION DETAIL**
SCALE: 3/4"=1'-0"

12" 6" 0 1' 2' 3'

DESIGNED Y.RYZHKOVA	1	04.01.09	ADDENDUM 1 – VALUE ENGINEERING		
DRAWN F.DALLAS	ISSUED	02.25.09			
CHECKED M.KNIGHT	REVISION	DATE	DESCRIPTION	BY	APP

CERTIFICATION

PROJECT DRAWINGS

ARCHITECTURE

RECEPTION DESK, FURNITURE, FIXTURE & EQUIP. SCHEDULE

DRAWING NO. A-851

WARD 1 SENIOR WELLNESS CENTER
3531 Georgia Ave., N.W.
Washington, D.C.

CHIEF DESIGN & ENGINEERING DIVISION
DATE

REGISTRATION No.
DATE
ARCHITECT
DATE

GOVERNMENT OF THE DISTRICT OF COLUMBIA
OFFICE OF PROPERTY MANAGEMENT

PROJECT NO. EA 129 C
BLDG NO.
DATE 11.02.06
SHEET NO 60 OF 98

0515_CD\DWG\ARCH DWG\PLOT DWGS\0515_A851.dwg

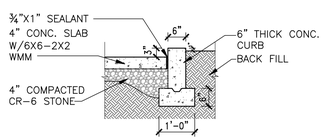

9 AS-01 **CURB DETAIL**
SCALE: 1/2"=1'-0"

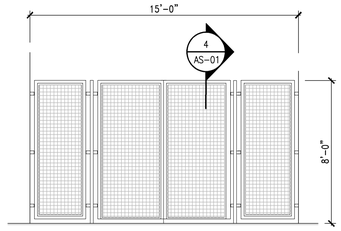

2 AS-01 **METAL FENCE**
SCALE: 1/4"=1'-0"

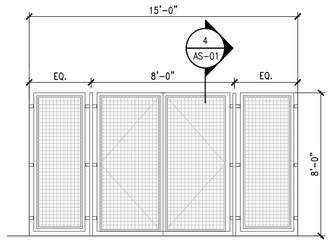

3 AS-01 **METAL GATE**
SCALE: 1/4"=1'-0"

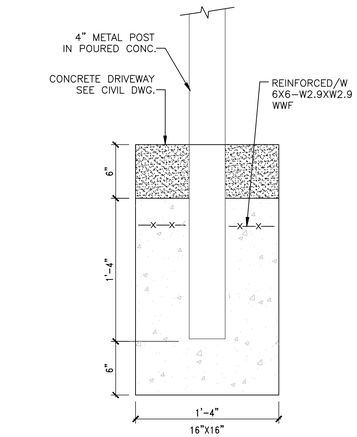

POST BASE AT FENCE, SIGN & CARD READER

7 AS-01 **DETAIL**
SCALE: 1 1/2"=1'-0"

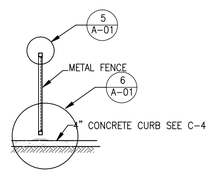

4 AS-01 **SECTION**
SCALE: 1/4"=1'-0"

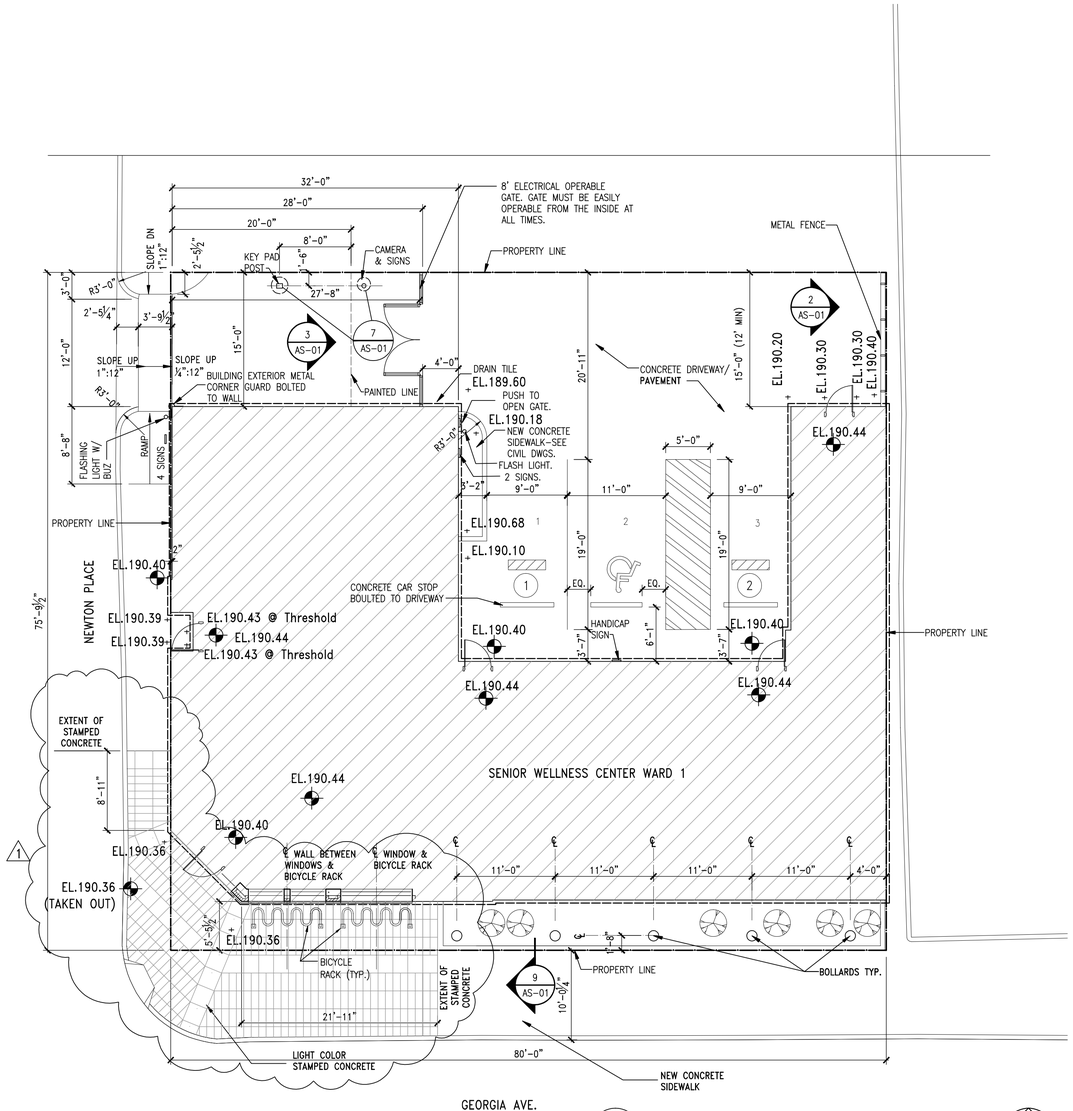

1 AS-01 **ARCHITECTURAL SITE PLAN**
SCALE: 1/8"=1'-0"

KEY NOTES:
1. AREA OF GREEN ROOF = 2024 SQ. FT.
2. AREA OF SITE = 6066 SQ. FT.

NOTES:

1. SEE SHEETS G.003 AND G.004 FOR LAYOUT OF SIGNAGE.
2. KEY PAD TO BE CONTROLLED FROM RECEPTION DESK.
3. ALL SIGNS TO BE MOUNTED ON BUILDING OR POST.
4. PROVIDE BULLARDS WHERE SHOWN INCLUDING 20" DIA. X 30" DEEP FOUNDATION ON 4" CRUSHED STONE.

PERMANENT MARKINGS @ PARKING:

(1) HYBRID VEHICLE PARKING ONLY
(2) VAN POOL VEHICLE ONLY

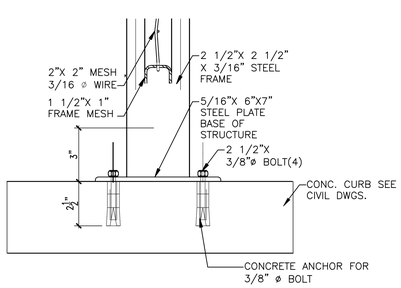

6 AS-01 **DETAIL**
SCALE: 3"=1'-0"

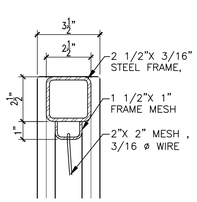

5 AS-01 **DETAIL**
SCALE: 3"=1'-0"

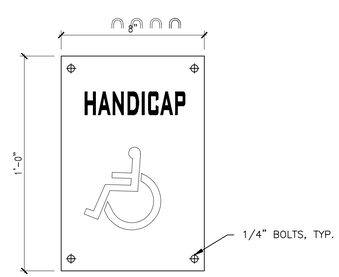

8 AS-01 **DETAIL**
SCALE: 3"=1'-0"

DESIGNED Y.RYZHKOVA	1	04.01.09	ADDENDUM 1 – VALUE ENGINEERING		
DRAWN G.ZUBERI	ISSUED	02.25.09			
CHECKED M.KNIGHT	REVISION	DATE	DESCRIPTION	BY	APP

CERTIFICATION

PROJECT DRAWINGS

ARCHITECTURAL SITE PLAN

WARD 1 SENIOR WELLNESS CENTER
3531 Georgia Ave., N.W.
Washington, D.C. 20011

ARCHITECTURE

DRAWING NO.

AS-01

CHIEF DESIGN & ENGINEERING DIVISION
DATE

REGISTRATION No.
DATE
ARCHITECT
DATE

GOVERNMENT OF THE DISTRICT OF COLUMBIA
OFFICE OF PROPERTY MANAGEMENT

PROJECT NO. EA 129 C
BLDG NO.
DATE 11.02.06
SHEET NO 20 OF 98

0515_CD\DWG\ARCH DWG\PLOT DWGS\0515_AS01.dwg

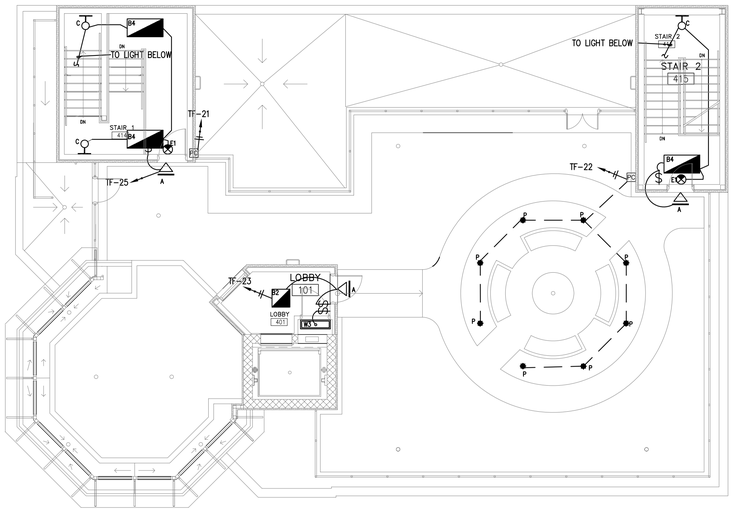

1 ROOF FLOOR - LIGHTING PLANS
E-103 SCALE: 1/8"=1'-0"

0 1' 5' 10'
GRAPHIC SCALE

SYMBOL LEGEND

BRANCH CIRCUIT HOMERUN TO PANELBOARD, NUMBER OF ARROWS INDICATES NUMBER OF CIRCUITS. FULL SLASHES INDICATE UNGROUNDED "HOT" CONDUCTORS. HALF SLASHES INDICATE GROUNDED NEUTRAL CONDUCTOR(S). DOT INDICATES EQUIPMENT GROUNDING CONDUCTOR.

BRANCH CIRCUIT WIRING CONCEALED UNDER FLOOR

PC PHOTO CONTROL SWITCH MOUNTED ON EXTERIOR WALL, 84" A.F.F.

DESIGNED M.ADEPOJU	1	04.01.09	ADDENDUM 1 – VALUE ENGINEERING		
DRAWN A.BEE	ISSUED	02.25.09			
CHECKED C.FORD	REVISION	DATE	DESCRIPTION	BY	APP

CERTIFICATION

PROJECT DRAWINGS

ELECTRICAL

ROOF FLOOR – LIGHTING

DRAWING NO.

E-103

WARD 1 SENIOR WELLNESS CENTER
3531 Georgia Ave., N.W.
Washington, D.C.

CHIEF DESIGN & ENGINEERING DIVISION

DATE

REGISTRATION No.

DATE

ARCHITECT

DATE

GOVERNMENT OF THE DISTRICT OF COLUMBIA
OFFICE OF PROPERTY MANAGEMENT

PROJECT NO. EA 129 C

BLDG NO.

DATE 11.02.06

SHEET NO 81 OF 98

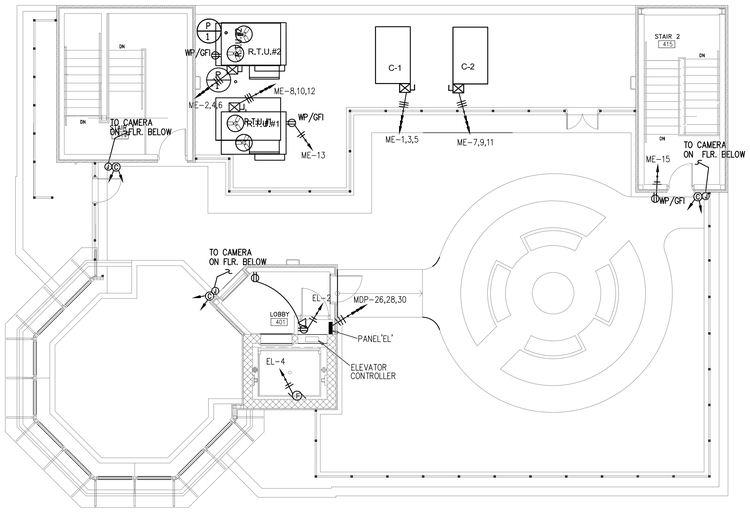

1 ROOF FLOOR - POWER PLAN
E-203 SCALE: 1/8"=1'-0"

0 1' 5' 10'
GRAPHIC SCALE

SYMBOL LEGEND

- FAN MOTOR INTEGRAL SWITCH
- FUSED DISCONNECT SWITCH
- WP/GFI — WEATHERPROOF DUPLEX RECEPTACLE OUTLET W/GROUND FAULT INTERRUPTER, NEMA 5-20R, 44"A.F.F.
- J — JUNCTION BOX
- EXHAUST FAN CONNECTION
- BRANCH CIRCUIT HOMERUN TO PANELBOARD, NUMBER OF ARROWS INDICATES NUMBER OF CIRCUITS. FULL SLASHES INDICATE UNGROUNDED "HOT" CONDUCTORS. HALF SLASHES INDICATE GROUNDED NEUTRAL CONDUCTOR(S). DOT INDICATES EQUIPMENT GROUNDING CONDUCTOR.
- BRANCH CIRCUIT WIRING CONCEALED UNDER FLOOR

DESIGNED M.ADEPOJU	1	04.01.09	ADDENDUM 1 – VALUE ENGINEERING		
DRAWN A.BEE	ISSUED	02.25.09			
CHECKED C.FORD	REVISION	DATE	DESCRIPTION	BY	APP

CERTIFICATION

PROJECT DRAWINGS — ELECTRICAL

ROOF FLOOR – POWER

DRAWING NO. E-203

WARD 1 SENIOR WELLNESS CENTER
3531 Georgia Ave., N.W.
Washington, D.C.

CHIEF DESIGN & ENGINEERING DIVISION
DATE

REGISTRATION No.
DATE

ARCHITECT
DATE

GOVERNMENT OF THE DISTRICT OF COLUMBIA
OFFICE OF PROPERTY MANAGEMENT

PROJECT NO. EA 129 C
BLDG NO.
DATE 11.02.06
SHEET NO 84OF 98

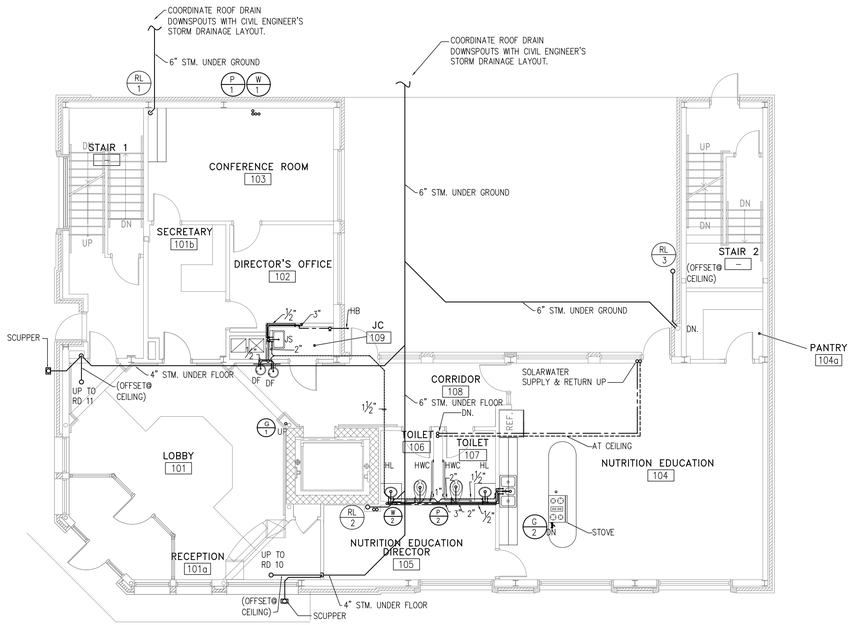

2 P-101 FIRST FLOOR - PLUMBING PLANS
SCALE: 1/8"=1'-0"

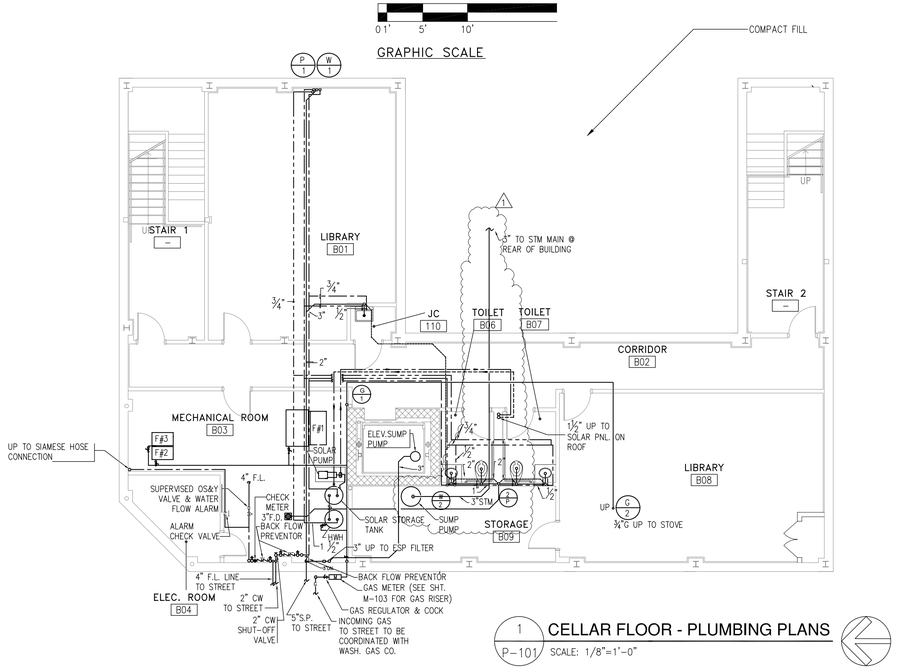

1 P-101 CELLAR FLOOR - PLUMBING PLANS
SCALE: 1/8"=1'-0"

GRAPHIC SCALE

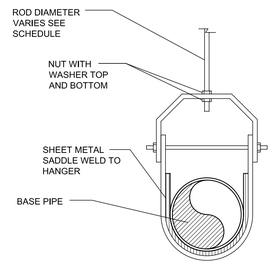

ROD SCHEDULE	
PIPE SIZE	ROD DIAMETER
1/2"	3/8"
3/4"	3/8"
1"	3/8"
1 1/4"	3/8"
1 1/2"	3/8"
2"	3/8"
2 1/2"	3/8"
3"	3/8"
4"	1/2"
5"	1/2"
6"	1/2"

PIPE HANGING DETAIL
N.T.S.

SPRINKLER NOTES

- CONTRACTOR SHALL PROVIDE SHOP DRAWINGS WITH A STAMP OF APPROVAL FROM THE DC FIRE MARSHALL'S OFFICE PRIOR TO THE START OF WORK.
- CONTRACTORS SHALL INSTALL SPRINKLER PIPING AND ALL COMPONENTS IN ACCORDANCE WITH THE LATEST PROVISION OF NFPA 13D INSTALLATION OF SPRINKLER SYSTEMS AND THE D.C. FIRE REGULATIONS, CONTRACTOR SHALL BE A SPECIALTY SUBCONTRACTOR WITH EMPLOYEES FOR THE LAST FIVE(5) YEARS WHO HAVE BEEN INSTALLING FIRE PROTECTION SYSTEM. ALL WORK SHALL BE INSPECTED AND TESTED IN THE PRESENCE OF AND TO THE SATISFACTION OF THE D.C. FIRE INSPECTOR.
- SPRINKLER HEADS, SHALL BE COMPLETE WITH 1/2" ORIFICE, 160 F TEMPERATURE RATING, 1" FEMALE M.P.T. AND U.L. LISTING.

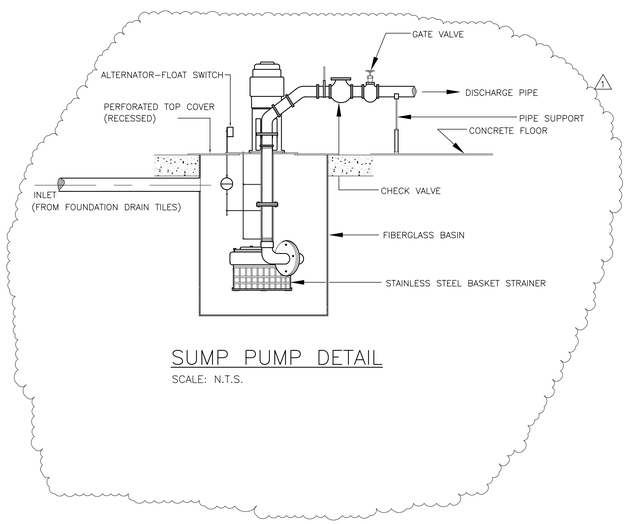

SUMP PUMP DETAIL
SCALE: N.T.S.

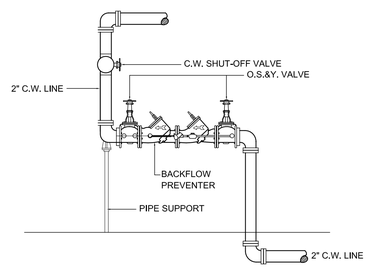

DOMESTIC WATER BACKFLOW DETAIL
N.T.S.

NOTE:
THE BACKFLOW PREVENTOR DOUBLE CHECK VALVE ASSEMBLIES SHALL BE ASSE-1015 WATTS MODEL#007

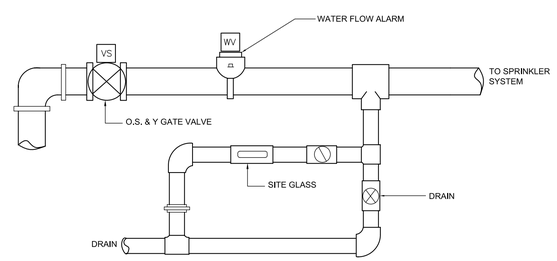

SPRINKLER DETAIL
N.T.S.

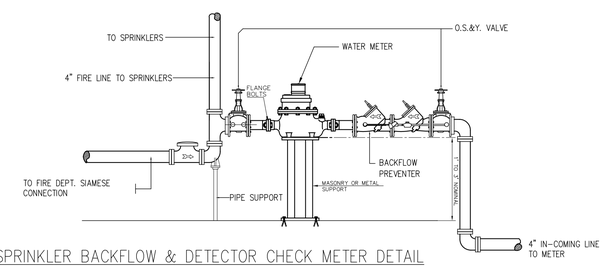

SPRINKLER BACKFLOW & DETECTOR CHECK METER DETAIL
N.T.S.

NOTE:
THE BACKFLOW PREVENTOR DOUBLE CHECK DETECTOR CHECK VALVE ASSEMBLIES SHALL BE AN AMES MODEL#3000 SS-ASSE1048.

DESIGNED L.HERRY	1	04.01.09	ADDENDUM 1 – VALUE ENGINEERING	
DRAWN M.CONRAD	ISSUED	02.25.09		
CHECKED C.FORD	REVISION	DATE	DESCRIPTION	BY / APP

CERTIFICATION

PROJECT DRAWINGS — PLUMBING

CELLAR & FIRST FLOOR — DRAWING NO. P-101

WARD 1 SENIOR WELLNESS CENTER
3531 Georgia Ave., N.W.
Washington, D.C.

CHIEF DESIGN & ENGINEERING DIVISION — DATE

REGISTRATION No. — DATE

ARCHITECT — DATE

GOVERNMENT OF THE DISTRICT OF COLUMBIA
OFFICE OF PROPERTY MANAGEMENT

PROJECT NO. EA 129 C
BLDG NO.
DATE 11.02.06
SHEET NO 90 OF 98

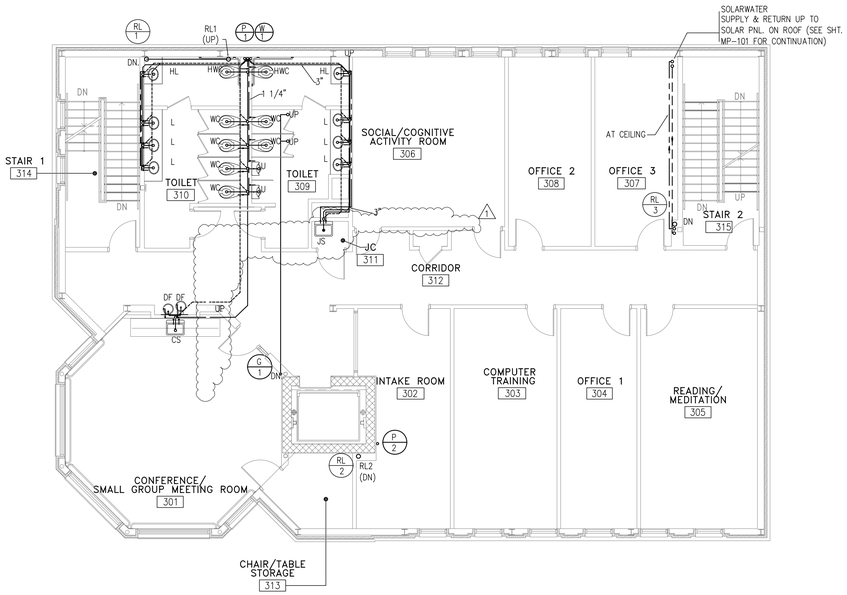

2 P-102 THIRD FLOOR - PLUMBING PLANS

SCALE: 1/8"=1'-0"

0 1' 5' 10'

GRAPHIC SCALE

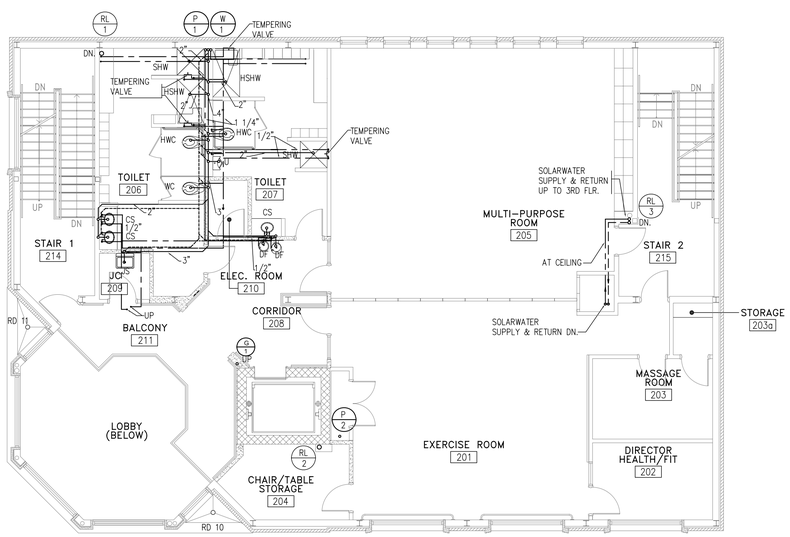

1 P-102 SECOND FLOOR - PLUMBING PLANS

SCALE: 1/8"=1'-0"

0 1' 5' 10'

GRAPHIC SCALE

PLUMBING FIXTURE LEGEND

ITEM	DESCRIPTION
HWC	HANDICAP WATER CLOSET (WATER CONSERVATION W/AUTO FLUSH)
WC	WATER CLOSET (WATER CONSERVATION W/AUTO FLUSH)
HL	HANDICAP LAVATORY W/MOTION SENSITIVE FAUCETS
L	LAVATORY W/MOTION SENSITIVE FAUCETS
U	URINAL (WATER FREE)
HSHW	HANDICAP SHOWER W/SCOLD FREE MIXING VALVE
SHW	SHOWER W/SCOLD FREE MIXING VALVE

SOLAR COLLECTOR SCHEDULE

SIZE	ΔT	MBTU/DAY			LOCATION
		CLEAR	MILD	CLOUD	
4'X8'	35	37	27	15	ROOF

- SOLAR COLLECTORS, EACH SHALL BE BLACK CHROME LIQUID FLATE PLATE TYPE W/COPPER ABSORBOR PLATE.
- ΔT W/70°F ENTERING WATER AND 105°F LEAVING WATER.
- PROVIDE ANTI-FREEZE FOR WINTER PROTECTION.
- PROVIDE FRAMING AND TILT-UP RACKS FOR FLAT ROOF INSTALLATION.
- PROVIDE TILTING MECHANISM FOR MAXIMUM SOLAR TRACKING.
- USE HELIODYNE, INC. MODEL GOBI 408 AS BASIS OF DESIGN.
- PROVIDE SOLAR PUMP W/2GPM@34' OF HEAD OR BETTER USE TACO 009 CARTRIDGE, 1/8HP,115V,60HZ,3250RPM MOTOR AS THE BASIS OF DESIGN.
- SOLAR PANELS ,SOLAR WATER STORAGE TANKS AND SOLAR PUMP SHALL BE INSTALLED BY EQUIPMENT MANUFACTURER OR MANUFACTURER RECOMMENDED CONTRACTOR.

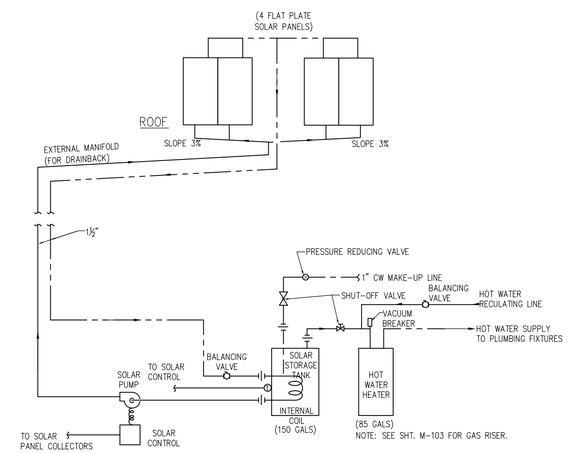

DOMESTIC HOT WATER RISER DIAGRAM

N.T.S.

DESIGNED L.HERRY	1	04.01.09	ADDENDUM 1 – VALUE ENGINEERING		
DRAWN M.CONRAD	ISSUED	02.25.09			
CHECKED C.FORD	REVISION	DATE	DESCRIPTION	BY	APP

CERTIFICATION

PROJECT DRAWINGS

PLUMBING

SECOND & THIRD FLOOR

DRAWING NO.

WARD 1 SENIOR WELLNESS CENTER
3531 Georgia Ave., N.W.
Washington, D.C.

P-102

CHIEF DESIGN & ENGINEERING DIVISION

DATE

REGISTRATION No.

DATE

ARCHITECT

DATE

GOVERNMENT OF THE DISTRICT OF COLUMBIA
OFFICE OF PROPERTY MANAGEMENT

PROJECT NO. EA 129 C

BLDG NO.

DATE 11.02.06

SHEET NO 91 OF 98

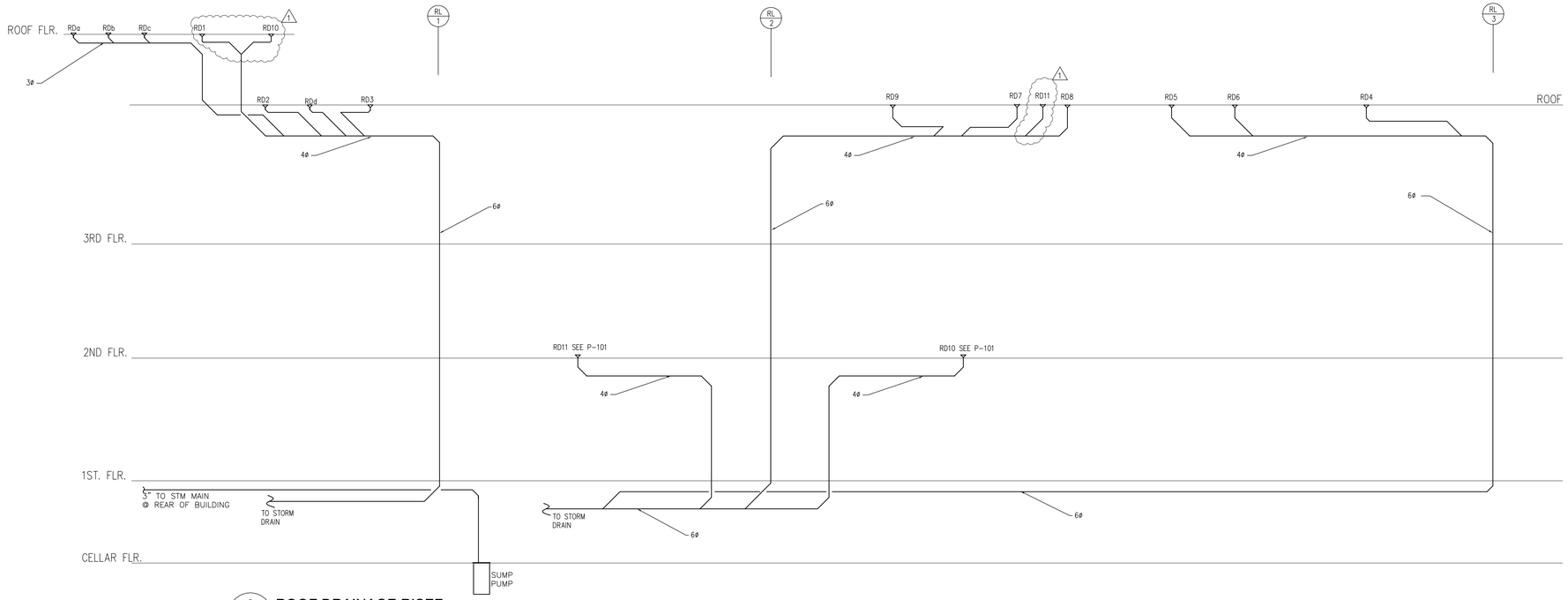

2 P-103 **ROOF DRAINAGE RISER**

SCALE: N.T.S.

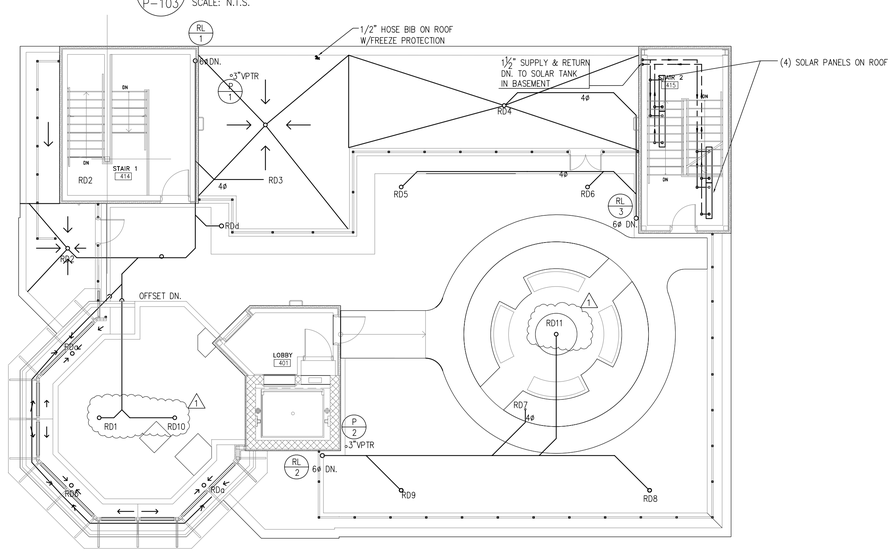

1 P-103 **ROOF FLOOR - DRAINAGE PLAN**

SCALE: 1/8"=1'-0"

0 1' 5' 10'

GRAPHIC SCALE

DESIGNED M. ADEPOJU	1	04.01.09	ADDENDUM 1 – VALUE ENGINEERING	
DRAWN A.BEE	ISSUED	02.25.09		
CHECKED C.FORD	REVISION	DATE	DESCRIPTION	BY / APP

CERTIFICATION

PROJECT DRAWINGS

PLUMBING

ROOF PLN. – STORM DRAINAGE & RISER

DRAWING NO. P-103

WARD 1 SENIOR WELLNESS CENTER
3531 Georgia Ave., N.W.
Washington, D.C.

CHIEF DESIGN & ENGINEERING DIVISION

DATE

REGISTRATION No.

DATE

ARCHITECT

DATE

GOVERNMENT OF THE DISTRICT OF COLUMBIA
OFFICE OF PROPERTY MANAGEMENT

PROJECT NO. EA 129 C

BLDG NO.

DATE 11.02.06

SHEET NO 92 OF 98

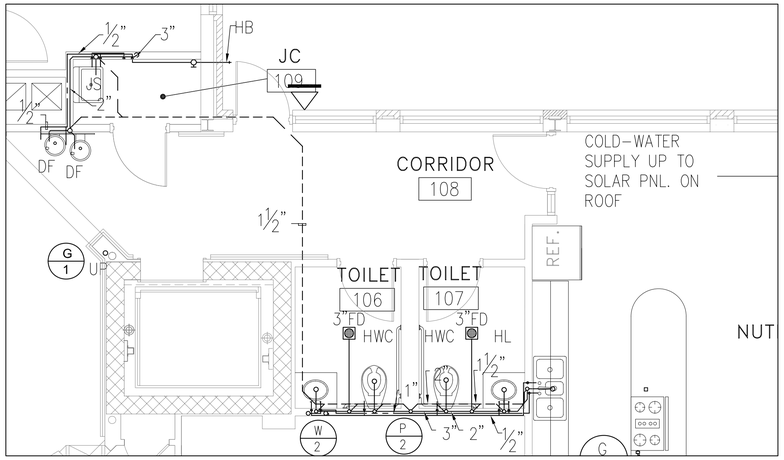

3 / P-201 FIRST FLOOR TOILETS AND KITCHEN PLUMBING
SCALE: 1/4"=1'-0"

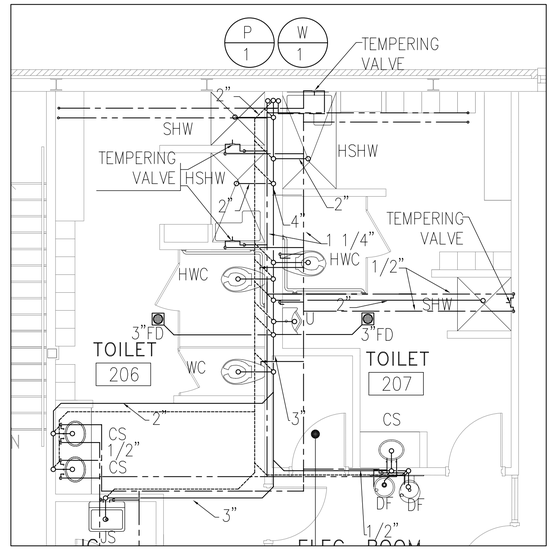

4 / P-201 SECOND FLOOR TOILETS PLUMBING
SCALE: 1/4"=1'-0"

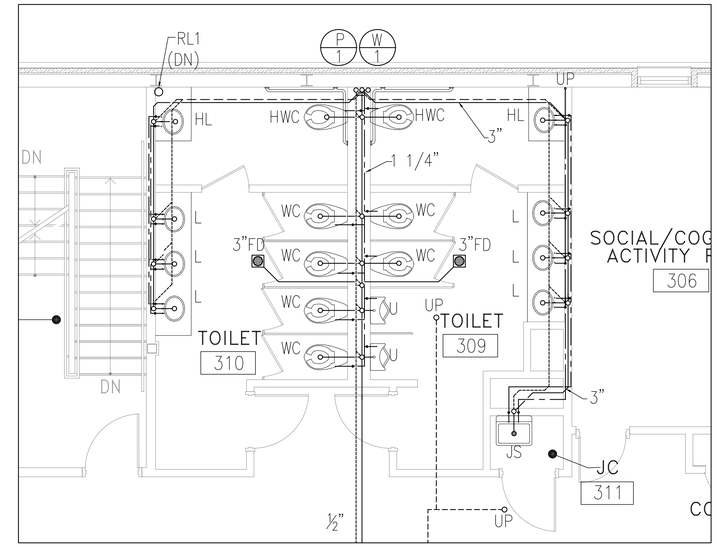

5 / P-201 THIRD FLOOR TOILETS PLUMBING
SCALE: 1/4"=1'-0"

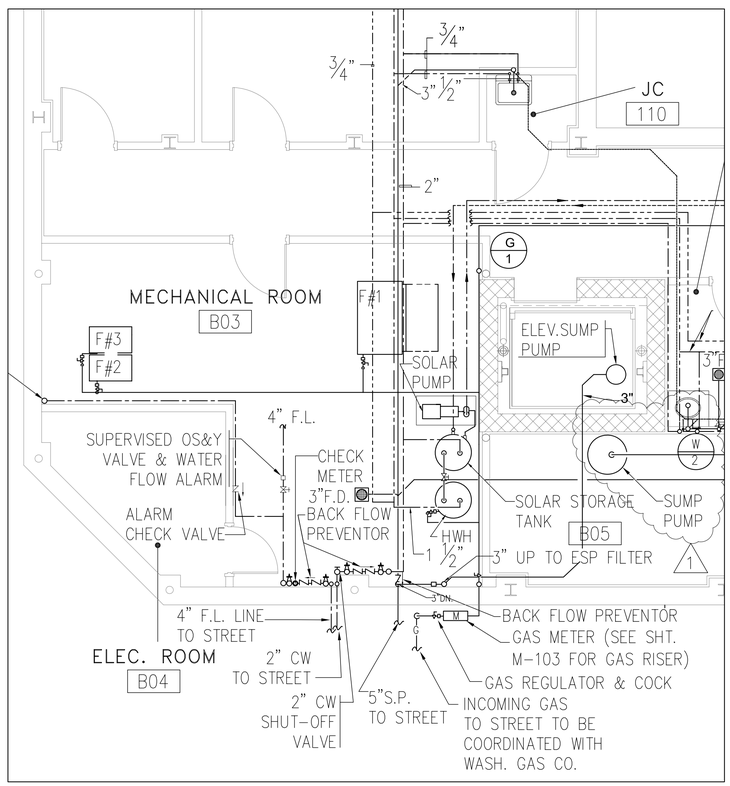

1 / P-201 JANITOR SINK AND VALVE ROOM PLUMBING (CELLAR FLOOR)
SCALE: 1/4"=1'-0"

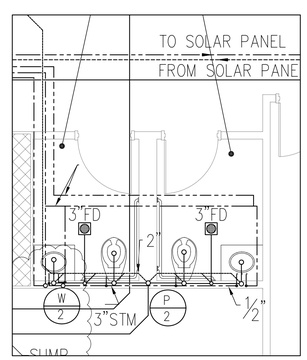

2 / P-201 CELLAR FLOOR TOILETS PLUMBING
SCALE: 1/4"=1'-0"

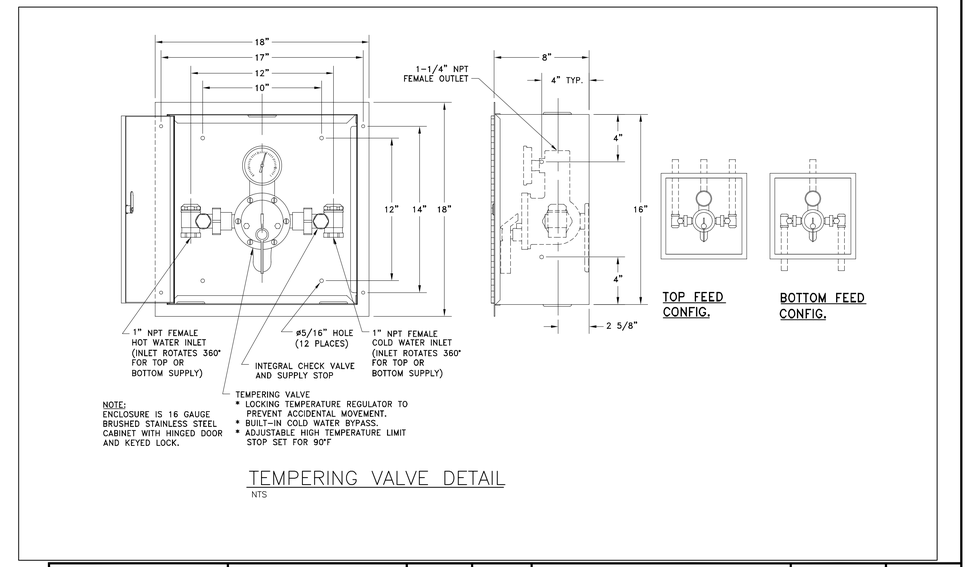

TEMPERING VALVE DETAIL
NTS

THIS SHEET SHALL BE SUBMITTED FOR DC FIRE MARSHALL APPROVAL.

0 1' 5' 10'
GRAPHIC SCALE

DESIGNED L.HERRY	1	04.01.09	ADDENDUM 1 – VALUE ENGINEERING	
DRAWN M.CONRAD	ISSUED	02.25.09		
CHECKED C.FORD	REVISION	DATE	DESCRIPTION	BY / APP

CERTIFICATION

PROJECT DRAWINGS

PARTIAL PLUMBING PLANS

WARD 1 SENIOR WELLNESS CENTER
3531 Georgia Ave., N.W.
Washington, D.C.

PLUMBING

DRAWING NO.

P-201

CHIEF DESIGN & ENGINEERING DIVISION

DATE

REGISTRATION No.

DATE

ARCHITECT

DATE

GOVERNMENT OF THE DISTRICT OF COLUMBIA
OFFICE OF PROPERTY MANAGEMENT

PROJECT NO. EA 129 C
BLDG NO.
DATE 11.02.06
SHEET NO 93 OF 98

PLUMBING FIXTURE CONNECTION SCHEDULE

DESCRIPTION	ABBREVIATION	SOIL/WASTE DIR.	SOIL/WASTE IND.	VENT	C.W.	H.W.	REMARKS
WATER CLOSET	WC	4"		2"	1"	---	FLOOR MOUNTED
HANDICAP WATER CLOSET	HWC	4"		2"	1"	---	WALL HUNG - HANDICAPPED
URINAL (FLUSH VALVE)	U	2"		1 1/2"	1"	---	WALL HUNG
LAVATORY	L	1 1/2"		1 1/2"	1/2"	1/2"	COUNTER TOP
JANATOR SINK	JS	3"		2"	1/2"	1/2"	
KITCHEN SINK	KS	2"		1 1/2"	1/2"	1/2"	COUNTER TOP
SERVICE SINK	SS	3"		2"	3/4"	3/4"	FLOOR MOUNTED
SHOWER	SW	2"		1 1/2"	1/2"	1/2"	W/TEMPERING VALVE
HANDICAP SHOWER	HSW	2"		1 1/2"	1/2"	1/2"	W/TEMPERING VALVE
DRINKING FOUNTAIN	DF	1 1/2"		1 1/2"	1/2"	---	HANDICAPPED ACCESSIBLE
3" FLOOR DRAIN	FD	3"		2"	---	---	SEE DETAIL
HOSE BIB	HB				1/2"		W/FREEZE PROTECTION

NOTE:
ELEVATOR SUMP PUMP SHALL BE A ½ HP AUTOMATIC SUBMERSIBLE WITH 1 ½" DISCHARGE LINE EQUIVALENT TO GRAINGER MODEL-3P579

BUILDING SUMP PUMP SHALL BE STAINLESS STEEL, 1 HP WITH A 2" NPT DISCHARGE, 1500 RPM,115 VAC, 60 HZ, 1P THERMALLY PROTECTED MOTOR WITH 60 GPM @ 30' HEAD. USE TEEL, ITT BELL & GOSSETT, LITTLE GAINT OR APPROVED EQUAL.

PLUMBING NOTES

1. THE CONTRACTOR SHALL FURNISH ALL LABOR, TOOLS AND MATERIALS REQUIRED FOR THE COMPLETE INSTALLATION OF PLUMBING AS SHOWN ON THE DRAWINGS.
2. ALL WORK SHALL BE EXECUTED IN A WORKMANLIKE MANNER AND SHALL BE NEAT AND MECHANICALLY CORRECT AND SHALL SHOW THE HIGHEST STANDARDS OF TRADE SKILLS IN IT'S APPEARANCE UPON COMPLETION AND IN ACCORDANCE WITH THE IPC AND DISTRICT OF COLUMBIA PLUMBING CODE.
3. ALL WORK SHALL BE PROTECTED FROM DAMAGE. ALL PIPES SHALL BE PROPERLY CLOSED WITH TEST PLUGS OR SCREW CAPS TO PREVENT STOPPAGE. ALL FIXTURES SHALL BE ADEQUATELY PROTECTED DURING CONSTRUCTION.
4. ALL PLUMBING LINES SHALL RUN PARALLEL WITH EXISTING BUILDING LINES WHERE POSSIBLE.
5. SLOPE DRAINAGE PIPING WITH A FALL OF 1/4" PER FOOT, WHERE POSSIBLE.
6. ALL PIPING SHALL BE PROPERLY SUPPORTED AND ANCHORED WITH METAL SLEEVE WHERE PIPING PENETRATES WALLS, PROVIDE BRASS ESCUTCHEONS IN FINISHED AREAS.
7. ALL PIPING EXCEPT VENTS SHALL BE INSULATED WITH 1/2" GLASS FIBER PRE-FORMED PIPE INSULATION WITH VAPOR BARRIER JACKET EXCEPT VENT PIPE.
8. PATCH AND SMOOTH ALL HOLES IN EXISTING FLOOR, CEILING, AND WALL SURFACES CAUSED BY ALTERATIONS OR INSTALLATION OF EQUIPMENT.

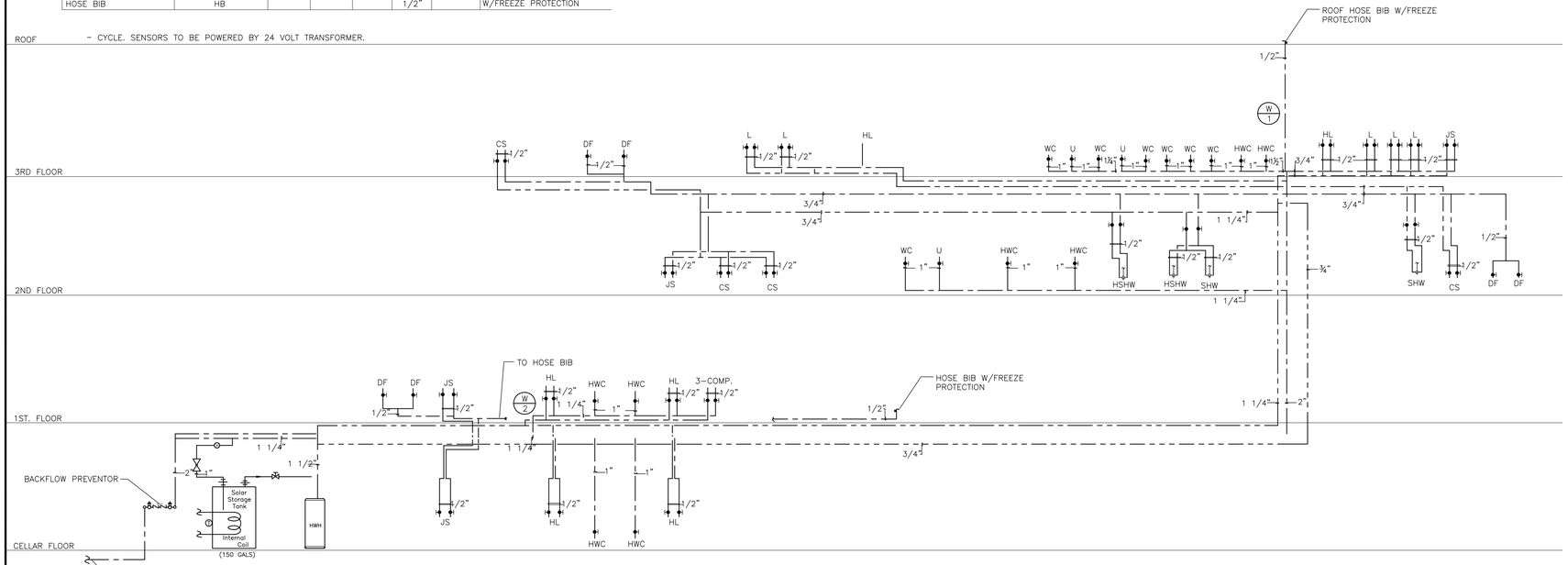

WATER RISER DIAGRAM
NTS

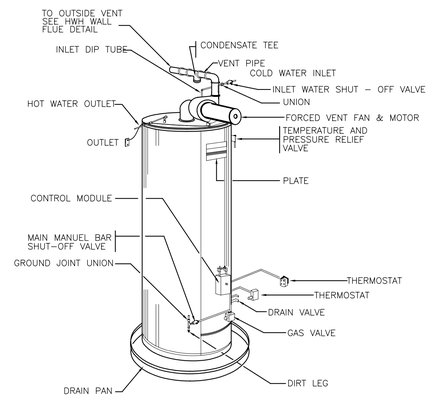

GAS FIRED WATER HEATER DETAIL
N.T.S.

NOTE:

1. HOT WATER HEATER, SHALL BE A COMMERCIAL ENERGY SAVING MODEL.
2. HOT WATER HEATER (H.W.H.) UNIT SHALL HAVE A 85 GALLON STORAGE TANK CAPABLE OF 120 GALLONS/HOUR RECOVERY @100°F RISE W/ 150,000 BTU/HR INPUT HIGH EFFICIENCY UNIT WITH SIDE POWER VENTING. USE A.O. SMITH GAS UNIT OR EQUAL.

PLUMBING LEGEND

- COLD WATER LINE
- HOT WATER LINE
- TEMPER WATER LINE
- PIPE UP-PIPE DOWN
- C — NEW GAS LINE
- SOIL OR WASTE LINE
- VENT LINE
- VPTR — VENT PIPE THRU ROOF
- FL — FIRE LINE
- FLOOR DRAIN
- POINT OF CONNECTION NEW TO EXISTING
- M — GAS METER
- HB — HOSE BIBB
- PRV — PRESSURE REDUCING VALVE
- STM — STORM PIPING

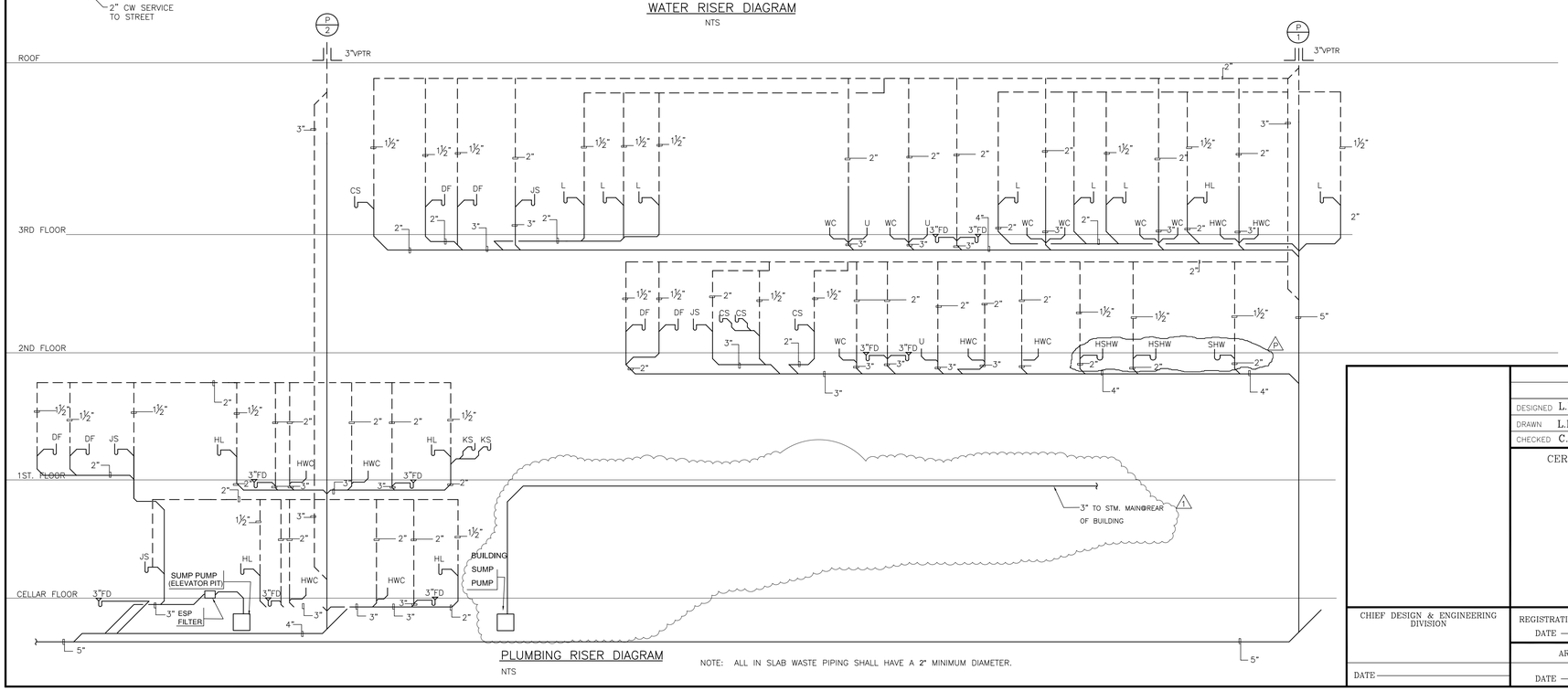

PLUMBING RISER DIAGRAM
NTS

NOTE: ALL IN SLAB WASTE PIPING SHALL HAVE A 2" MINIMUM DIAMETER.

DESIGNED L.HERRY	1	04.01.09	ADDENDUM 1 - VALUE ENGINEERING		
DRAWN L.HARRY	ISSUED	02.25.09			
CHECKED C.FORD	REVISION	DATE	DESCRIPTION	BY	APP

CERTIFICATION

PROJECT DRAWINGS

PLUMBING

RISER DIAGRAMS, SHEDULES & DETAILS

DRAWING NO.

WARD 1 SENIOR WELLNESS CENTER
3531 Georgia Ave., N.W.
Washington, D.C.

P-202

CHIEF DESIGN & ENGINEERING DIVISION

DATE

REGISTRATION No.
DATE

ARCHITECT
DATE

GOVERNMENT OF THE DISTRICT OF COLUMBIA
OFFICE OF PROPERTY MANAGEMENT

PROJECT NO. EA 129 C
BLDG NO.
DATE 11.02.06
SHEET NO 94 OF 98

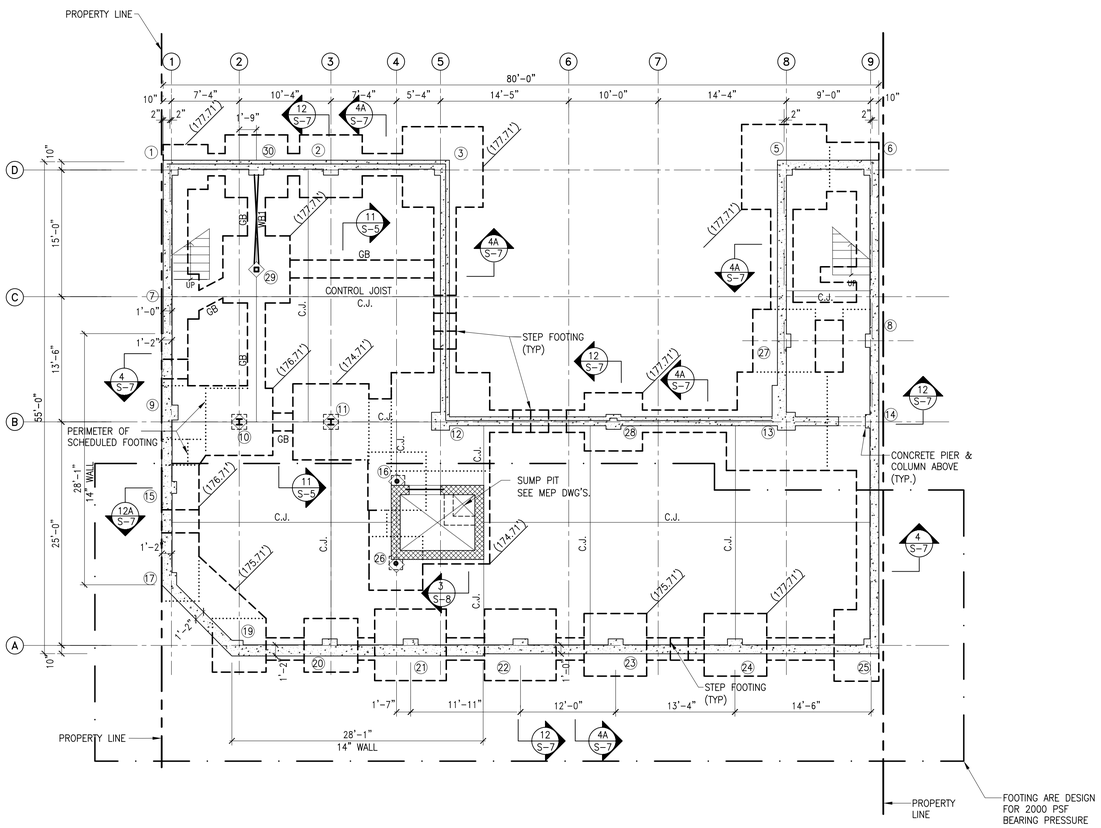

1 / S-2 CELLAR FLOOR AND FOUNDATION PLAN

1/8" = 1'-0"

NOTE:

1. DESIGN FLOOR LIVE LOAD =100 P.S.F
2. TOP OF SLAB ON GRADE ELEVATION SHALL BE (178.44').
3. TOP OF FOOTING ELEVATION SHOWN ON DRAWING THUS (XX.XX')
4. SEE ARCHI'T. DRAWING FOR DIMENSIONS AND ELEVATIONS NOT SHOWN.
5. FLOOR SLAB SHALL BE 4"THICK CONCRETE, SEE STRUCTURAL NOTES AND TYPICAL DETAILS FOR MORE INFORMATION.
6. "WB" INDICATES WIND BRACE, SEE S-8 FOR DETAIL.
7. "GB" INDICATES 18"x14" CONCRETE GRADE BEAM WITH 3#6 T&B &#3TIES @12" O.C. (SEE SECTION 11/S5)

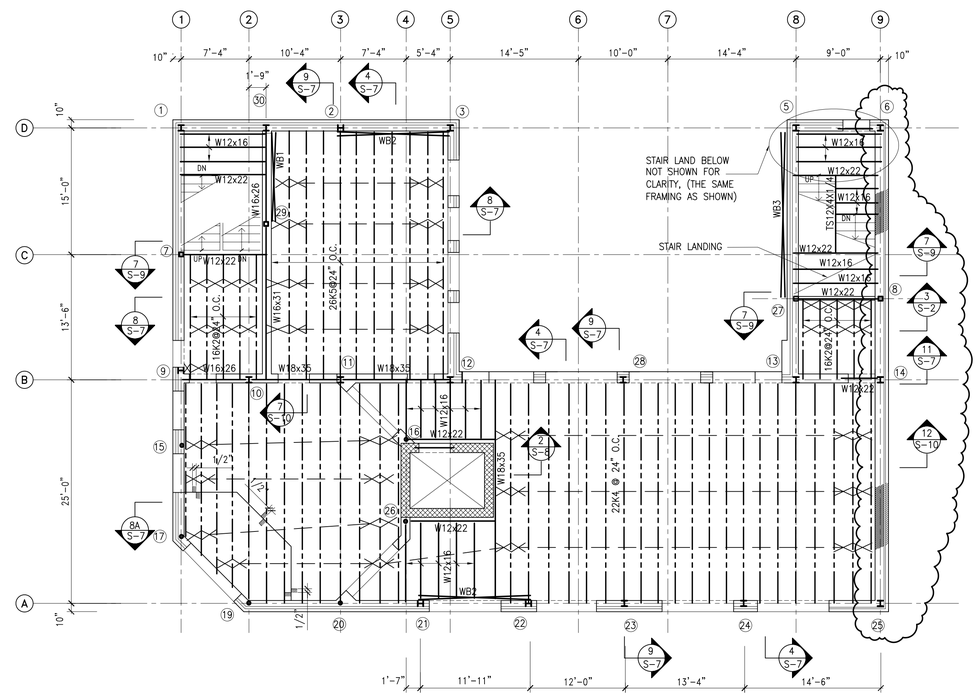

2 / S-2 FIRST FLOOR FRAMING PLAN

1/8" = 1'-0"

NOTE:

1. DESIGN FLOOR LIVE LOAD =100 P.S.F
2. FLOOR SYSTEM SHALL BE 3" CONCRETE POURED OVER GALV. METAL CENTERING, STANDARD CONFORM, SLABFORM OR EQUAL, (TOTAL THICKNESS OF SLAB SHALL BE 3" MINIMUM INCLUDING METAL CENTERING.) REINFORCED WITH 6" X 6"- W2.0 X W2.0 W.W.F.
3. TOP OF SLAB ELEV. SHALL BE (190.44')
4. SEE ARCH'T. DWGS FOR DIMENSIONS AND ELEV. NOT SHOWN.
5. ALL STEEL JOISTS & COL. LOCATIONS SHALL HAVE BOTTOM CHORD SAME AS TOP CHORD.

DESIGNED Y.RYZHKOVA	1	04.01.09	ADDENDUM 1 – VALUE ENGINEERING		
DRAWN	ISSUED	02.25.09			
CHECKED M.KNIGHT	REVISION	DATE	DESCRIPTION	BY	APP

CERTIFICATION

PROJECT DRAWINGS

ARCHITECTURE

WARD 1 SENIOR WELLNESS CENTER
3531 Georgia Ave., N.W.
Washington, D.C.

DRAWING NO.

S2

CHIEF DESIGN & ENGINEERING DIVISION

DATE

REGISTRATION No.

DATE

ARCHITECT

DATE

GOVERNMENT OF THE DISTRICT OF COLUMBIA
OFFICE OF PROPERTY MANAGEMENT

PROJECT NO. EA 129 C

BLDG NO.

DATE 11.02.06

SHEET NO OF 98

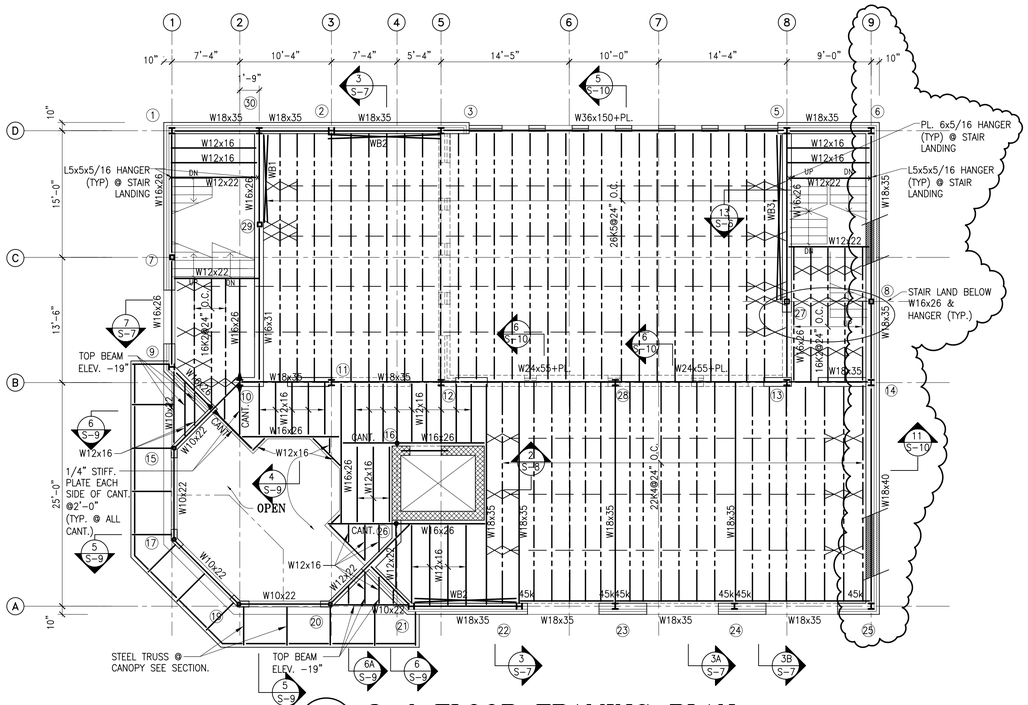

1 / S-3 2nd FLOOR FRAMING PLAN

1/8" = 1'-0"

NOTES:

1- SEE 1st FLOOR FRAMING NOTES FOR MORE INFORMATION.
2- TOP OF SLAB ELEVATION SHALL BE 205.77'
3- ◄— —► INDICATE MOMENT CONNECTION.

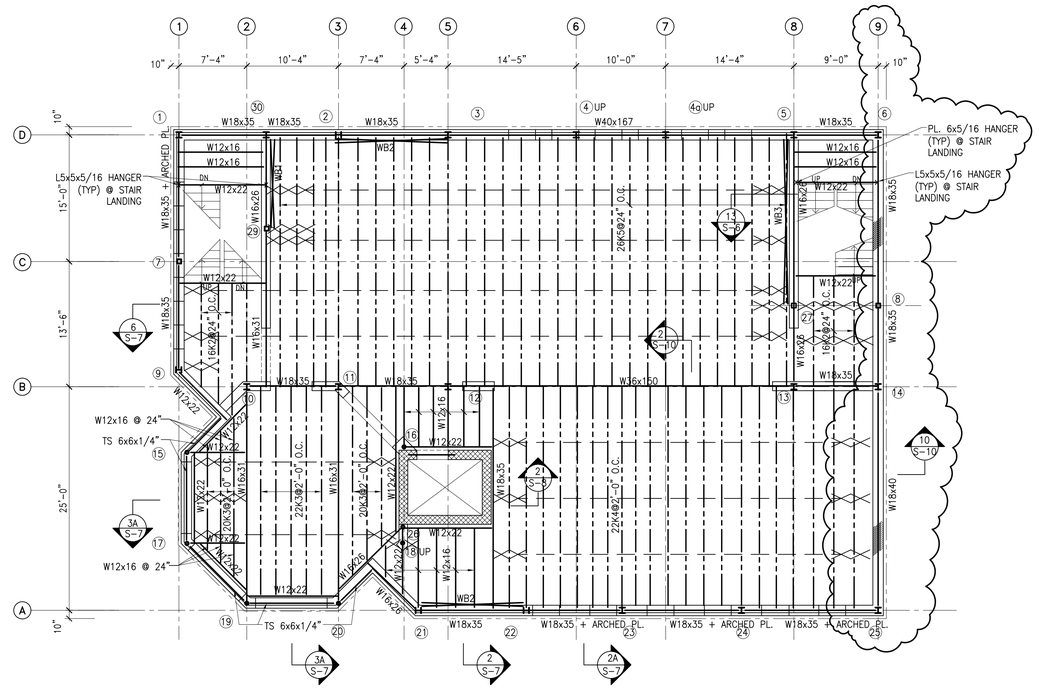

2 / S-3 3rd FLOOR FRAMING PLAN

1/8" = 1'-0"

NOTES:

1-SEE 1st FLOOR FRAMING NOTES FOR MORE INFORMATION.
2- TOP OF SLAB ELEVATION SHALL BE 221.11'

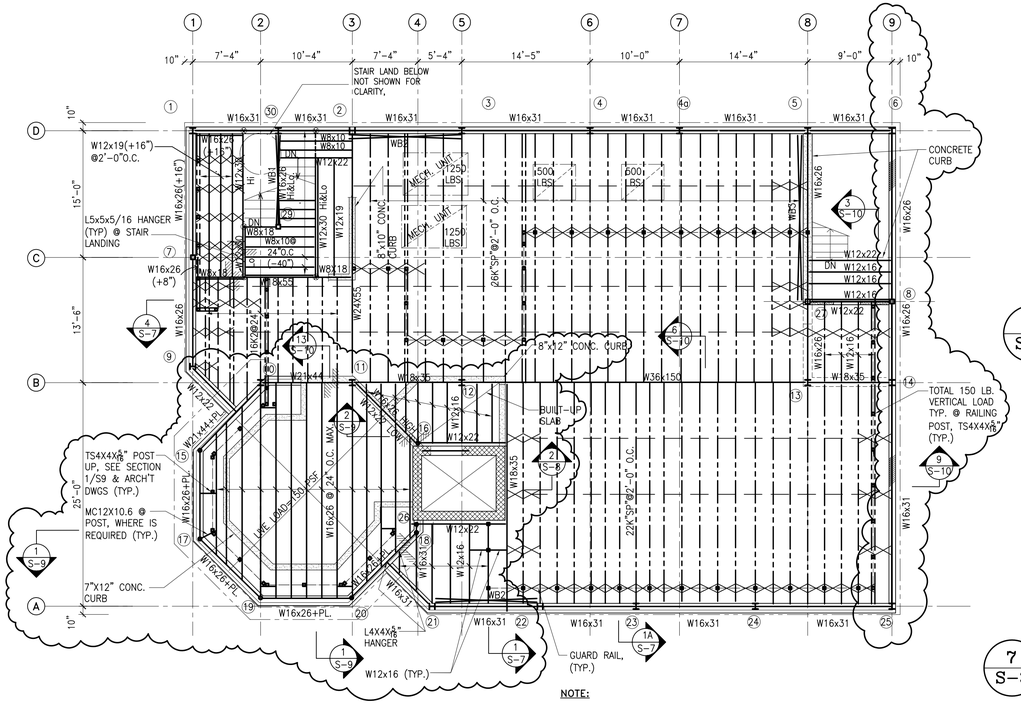

3 / S-3 ROOF FRAMING PLAN

1/8" = 1'-0"

NOTE:

1. DESIGN LIVE LOAD =100 P.S.F, U.N.O ON PLAN, STEEL JOIST SUPPLIER SHALL DESIGN THE JOIST FOR ADDITIONAL LOADS WALL PANELS SNOW DRIFT (SEE 4/S3 FOR DESIGN DIAGRAM) AND WEIGHT OF MECH. UNITS SHOWN ON PLAN.
2. ROOF SYSTEM SHALL BE 3" CONCRETE POURED OVER GALV. METAL CENTERING, STANDARD CONFORM, SLABFORM OR EQUAL, (TOTAL THICKNESS OF SLAB SHALL BE 3" MINIMUM INCLUDING METAL CENTERING.) REINFORCED WITH 6" X 6"- W2.0 X W2.0 W.W.F.
3. ALL STEEL JOISTS & COL. LOCATIONS SHALL HAVE BOTTOM CHORD SAME AS TO CHORD.
4. TOP OF BEAM ELEVATION SHOWN THUS (XX.XX') FOR DIMENSIONS & ELEV. NOT SHOWN, SEE ARCH'T. DWGS.

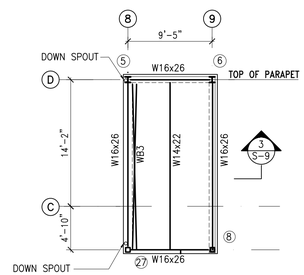

4 / S-3 HIGH ROOF FRAMING PLAN @ STAIR

1/8" = 1'-0"

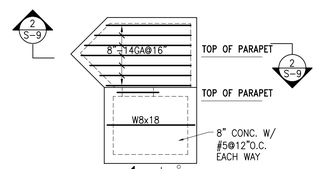

5 / S-3 HIGH ROOF FRAMING PLAN @ ELEVATOR

1/8" = 1'-0"

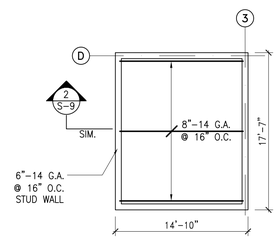

6 / S-3 STAIR ROOF

1/8" = 1'-0"

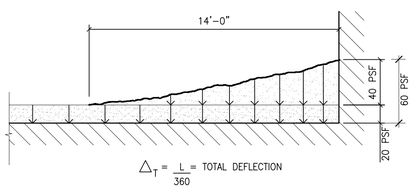

7 / S-3 SNOW DRIFT LOAD DAIGRAM FOR "SP" JOISTS (SPECIAL JOISTS)

SCALE: N.T.S.

DESIGNED Y.RYZHKOVA	1	04.01.09	ADDENDUM 1 – VALUE ENGINEERING		
DRAWN	ISSUED	02.25.09			
CHECKED M.KNIGHT	REVISION	DATE	DESCRIPTION	BY	APP

CERTIFICATION

PROJECT DRAWINGS

ARCHITECTURE

WARD 1 SENIOR WELLNESS CENTER
3531 Georgia Ave., N.W.
Washington, D.C.

DRAWING NO. S3

CHIEF DESIGN & ENGINEERING DIVISION
DATE

REGISTRATION No.
DATE
ARCHITECT
DATE

GOVERNMENT OF THE DISTRICT OF COLUMBIA
OFFICE OF PROPERTY MANAGEMENT

PROJECT NO. EA 129 C
BLDG NO.
DATE 11.02.06
SHEET NO OF 98

COLUMN SCHEDULE

FLOORS \ COL.#	1	2	3	4	4a	5	6	7	8	9	10	11	12	13	14	15	16	17	18	19	20	21	22	23	24	25	26	27	28	29	30	COL. LINES / FLOORS
HIGH ROOF																																HIGH ROOF
ROOF						10	10		10																			5				ROOF
3rd. FLOOR	W 8 x 31 / 15	W 8 x 40 / 25	W 8 x 67 / 40	W 8 x 24 / 40	W 8 x 24 / 40	W 8 x 67 / 40	W 8 x 31 / 20	TS6X6X5/16 / 10	TS6X6X5/16 / 30	W 8 x 28 / 15	W 8 x 40 / 75	W 8 x 48 / 60	W 12 x 72 / 120	W 12 x 72 / 115	W 8 x 40 / 50	6"ø DOUBLE EXTRA PIPE / 10	6"ø ST. PIPE / 20	6"ø DOUBLE EXTRA PIPE / 10	6"ø ST. PIPE / 10	6"ø DOUBLE EXTRA PIPE / 10	6"ø DOUBLE EXTRA PIPE / 10	W 8 x 35 / 25	W 8 x 35 / 25	W 8 x 35 / 35	W 8 x 35 / 35	W 8 x 35 / 25	6"ø ST. PIPE / 5	TS6X6X5/16 / 20		TS6X6X5/16 / 15	W 8 x 40 / 10	3rd. FLOOR
2nd. FLOOR	W 8 x 31 / 45	W 8 x 40 / 50	W 8 x 67 / 105			W 8 x 67 / 105	W 8 x 31 / 45	TS6X6X5/16 / 30	TS6X6X5/16 / 50	W 8 x 28 / 35	W 8 x 40 / 105	W 8 x 48 / 110	W 12 x 72 / 230	W 12 x 72 / 220	W 8 x 40 / 80	6"ø DOUBLE EXTRA PIPE / 25	6"ø ST. PIPE / 35	6"ø DOUBLE EXTRA PIPE / 25		6"ø DOUBLE EXTRA PIPE / 35	6"ø DOUBLE EXTRA PIPE / 35	W 8 x 35 / 55	W 8 x 35 / 55	W 8 x 35 / 60	W 8 x 35 / 60	W 8 x 35 / 60	6"ø ST. PIPE / 25	TS6X6X5/16 / 35		TS6X6X5/16 / 30	W 8 x 40 / 30	2nd. FLOOR
1st. FLOOR		65 / 75	170			170	70	50	70	50	135	160	340	325	110	6"ø DOUBLE EXTRA PIPE / 40	55	6"ø DOUBLE EXTRA PIPE / 40		6"ø DOUBLE EXTRA PIPE / 60	6"ø DOUBLE EXTRA PIPE / 60	85	85	95	95	95	6"ø ST. PIPE / 50	50	W 8 x 40 / 100	45	45	1st. FLOOR
CELLAR LEVEL											165	210					75										6"ø ST. PIPE / 60				60		CELLAR LEVEL
LOAD DUE TO WIND		55	55			90																55	55					90		90	90	LOAD DUE TO WIND
TOTAL LOAD (KIPS)	65	130	225	40	40	260	70	50	70	55	165	210	340	325	110	40	75	40	10	60	60	140	140	95	95	95	60	140	100	150	135	TOTAL LOAD (KIPS)
BASE PLATE (Inches)	14"X 3/4" X12"	14"X 1" X14"	14"X1-1/4" X14"			16"X1-1/4" X12"	14"X3/4" X14"	8"X3/4" X14"	8"X3/4" X14"	14"X3/4" X14"	14"X1" X14"	14"X1" X14"	18"X1-1/2" X18"	18"X1-1/2" X18"	14"X3/4" X14"	10"X3/4" X10"	10"X3/4" X10"	10"X3/4" X10"	10"X3/4" X10"	10"X3/4" X10"	10"X3/4" X10"	14"X1" X14"	14"X1" X14"	14"X1" X14"	14"X1" X14"	14"X1" X14"	10"X3/4" X10"	8"X3/4" X14"	14"X1" X14"	12"X3/4" X12"	14"X3/4" X14"	BASE PLATE (Inches)
ELEV. BOT OF BASE PLATE (187.71' U.N.O)											177.83	177.83					177.83										177.83			177.83		ELEV. BOT OF BASE PLATE (187.77' U.N.O)
PIER — SIZE	20x20	20x20	20x20			20X20	20X20		20X20	20X20	20X20	20X20	24X24	24X24	20X20	20X20	20X20	20X20		20X20	20X20	20X20	20X20	20X20	20X20	20X20	18X18	20X20	20X20		20X20	SIZE
PIER — REINF.	4 # 7	4 # 7	4 # 7			4 # 7	4 # 7		4 # 7	4 # 7	4 # 7	4 # 7	4 # 7	4 # 7	4 # 7	4 # 7	4 # 7	4 # 7		4 # 7	4 # 7	4 # 7	4 # 7	4 # 7	4 # 7	4 # 7	4 # 6	4 # 7	4 # 7		4 # 7	REINF.
FOOTING — SIZE (FT.)	5'-0" X 5'-0"	7'-0" X 7'-0"	9'-0" X 9'-0"			9'-6" X 9'-6"	5'-6" X 5'-6"	4'-0" X 5'-0"	4'-0" X 7'-0"	5'-0" X 5'-0"	7'-6" X 7'-6"	8'-6" X 8'-6"	11'-0" X 11'-0"	11'-0" X 11'-0"	11'-0" X 5'-0"	4'-0" X 5'-0"	6'-6" X 6'-6"	4'-0" X 5'-0"		6'-0" X 6'-0"	6'-0" X 6'-0"	8'-0" X 8'-0"	8'-0" X 8'-0"	7'-0" X 7'-0"	7'-0" X 7'-0"	8'-0" X 8'-0"	6'-0" X 6'-0"	7'-0" X 7'-0"	6'-6" X 6'-6"	7'-6" X 7'-6"	7'-0" X 7'-0"	SIZE
FOOTING — THICKNESS (IN.)	14"	18"	18"			18"	14"	14"	14"	14"	16"	18"	24"	24"	14"	16"	16"	14"		14"	14"	18"	18"	16"	16"	18"	14"	16"	14"	16"	16"	THICKNESS (IN.)
FOOTING — REINF. BOT.-E.W.	6 # 6	7 # 6 T&B	9 # 7 T&B			9 # 7 T&B	6 # 6	#808"O.C. E.W.	#808"O.C. E.W.	#808"O.C. E.W.	7 # 6	8 # 6	11 # 7	11 # 7	#808"O.C. E.W.	#808"O.C. E.W.	7 # 6	#808"O.C. E.W.		6 #5 E.W.	6 #5 E.W.	8#6 T & B E.W.	8#6 T & B E.W.	7 #6 E.W.	7 #6 E.W.	#808"O.C. E.W.	6 # 5	7 # 6 T&B	6 # 5	7 # 6 T&B	7 # 6 T&B	REINF. BOT.-E.W.

FOOTINGS ARE DESIGNED FOR 3,000 PSF BEARING PRESSURE

FOOTINGS ARE DESIGNED FOR 2,000 PSF BEARING PRESSURE

FOOTINGS ARE DESIGNED FOR 3,000 PSF BEARING PRESSURE

DESIGNED Y.RYZHKOVA	1	04.01.09	ADDENDUM 1 – VALUE ENGINEERING	
DRAWN	ISSUED	02.25.09		
CHECKED M.KNIGHT	REVISION	DATE	DESCRIPTION	BY / APP

CERTIFICATION

PROJECT DRAWINGS — ARCHITECTURE

COLUMN SCHEDULE

WARD 1 SENIOR WELLNESS CENTER
3531 Georgia Ave., N.W.
Washington, D.C.

DRAWING NO. S4

CHIEF DESIGN & ENGINEERING DIVISION — DATE

REGISTRATION No. — DATE

ARCHITECT — DATE

GOVERNMENT OF THE DISTRICT OF COLUMBIA
OFFICE OF PROPERTY MANAGEMENT

PROJECT NO. EA 129 C
BLDG NO.
DATE 11.02.06
SHEET NO 65 OF 98

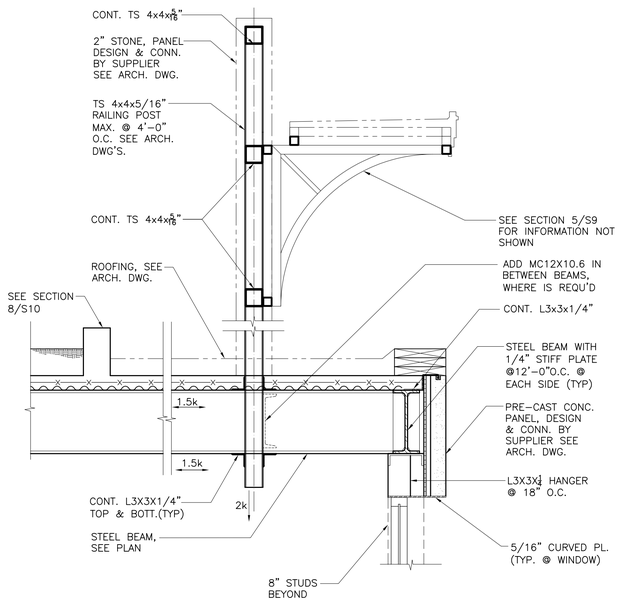

1 / S9 SECTION
SCALE: 3/4" = 1'-0"

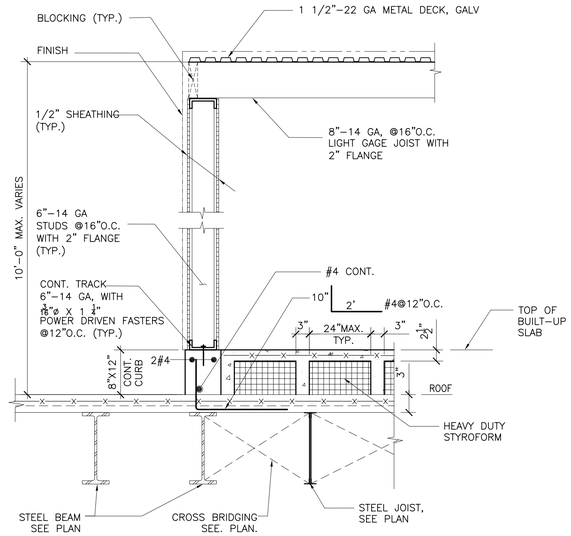

2 / S9 SECTION
SCALE: N.T.S

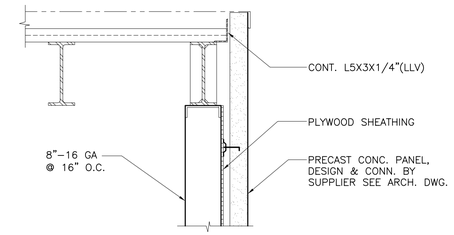

3 / S9 SECTION
SCALE: 3/4" = 1'-0"

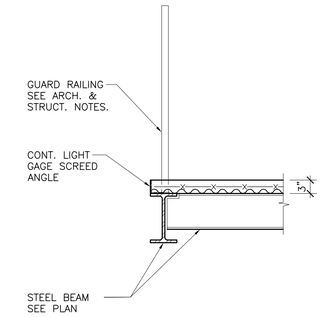

4 / S9 SECTION
SCALE: 3/4" = 1'-0"

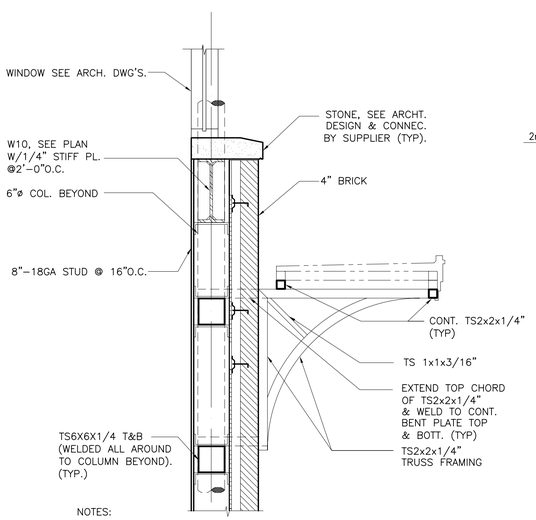

NOTES:

1. SEE ARCHT. DRAWING FOR INFORMATION NOT SHOWN.
2. ALL TRUSS FRAMINGS CONNECTION SHALL BE WELDED & GRIND SMOOTH.

5 / S9 SECTION
SCALE: 3/4" = 1'-0"

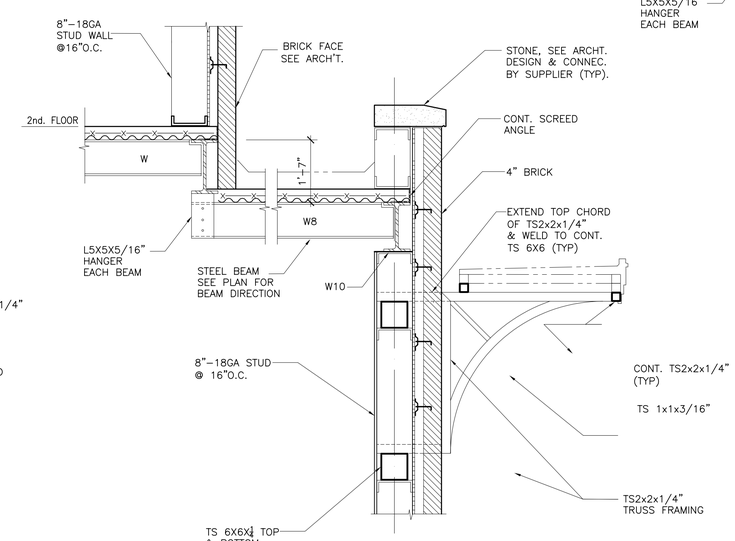

6 / S9 SECTION
SCALE: 3/4" = 1'-0"

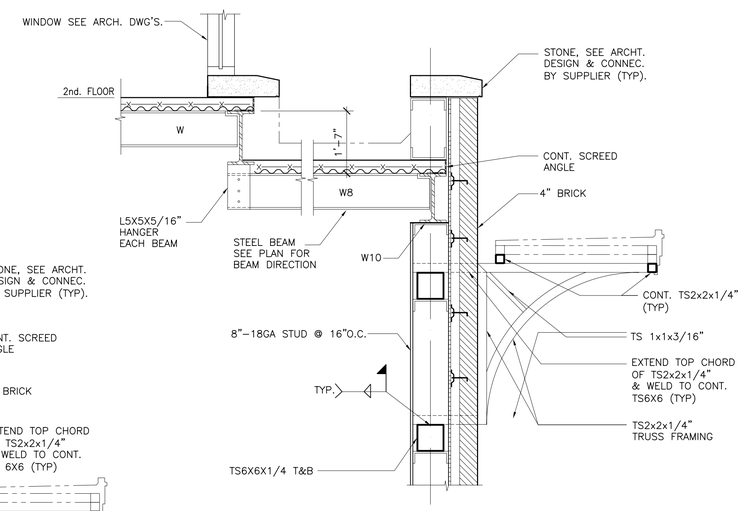

6A / S9 SECTION
SCALE: 3/4" = 1'-0"

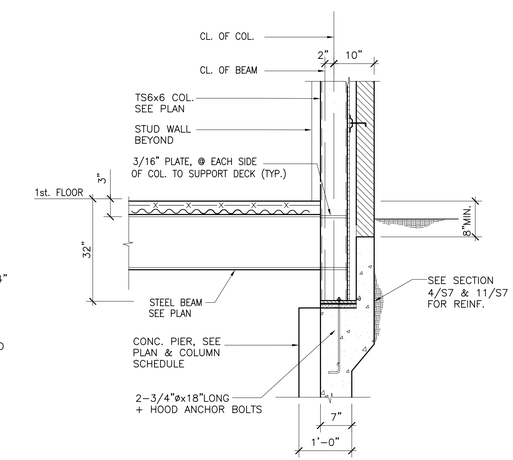

7 / S9 SECTION
SCALE: 3/4" = 1'-0"

DESIGNED Y.RYZHKOVA	1	04.01.09	ADDENDUM 1 - VALUE ENGINEERING		
DRAWN	ISSUED	02.25.09			
CHECKED M.KNIGHT	REVISION	DATE	DESCRIPTION	BY	APP

CERTIFICATION

PROJECT DRAWINGS

ARCHITECTURE

SECTIONS

DRAWING NO.

S9

WARD 1 SENIOR WELLNESS CENTER
3531 Georgia Ave., N.W.
Washington, D.C.

CHIEF DESIGN & ENGINEERING DIVISION

DATE

REGISTRATION No.
DATE

ARCHITECT
DATE

GOVERNMENT OF THE DISTRICT OF COLUMBIA
OFFICE OF PROPERTY MANAGEMENT

PROJECT NO. EA 129 C
BLDG NO.
DATE 11.02.06
SHEET NO 70 OF 98

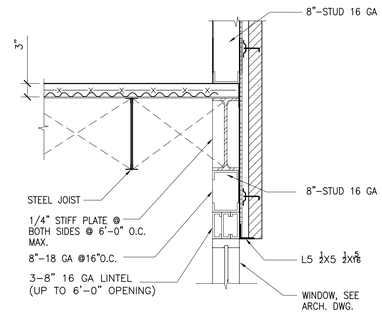

1 S-10 TYPICAL SECTION
SCALE: 3/4" = 1'-0"

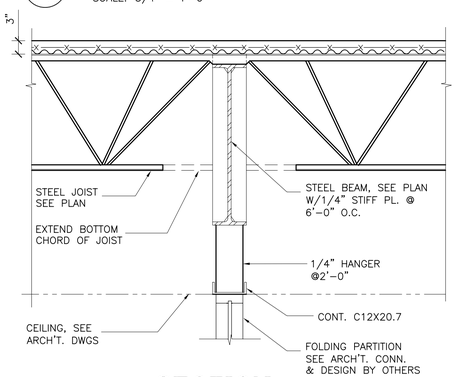

2 S-10 SECTION
SCALE: 3/4" = 1'-0"

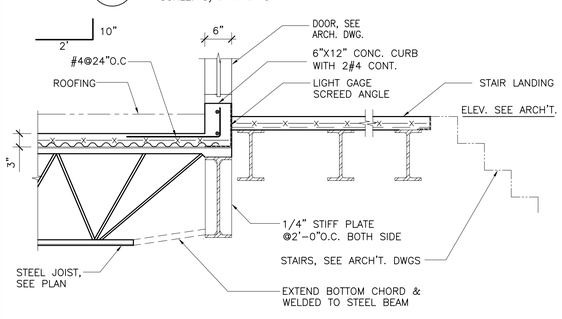

3 S-10 SECTION
SCALE: 3/4" = 1'-0"

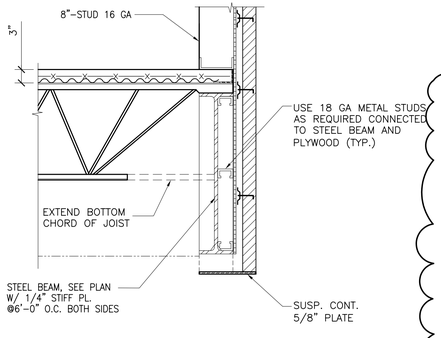

4 S-10 SECTION
SCALE: 3/4" = 1'-0"

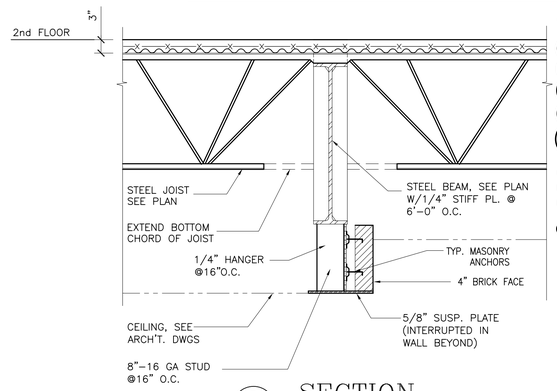

5 S-10 SECTION
SCALE: 3/4" = 1'-0"

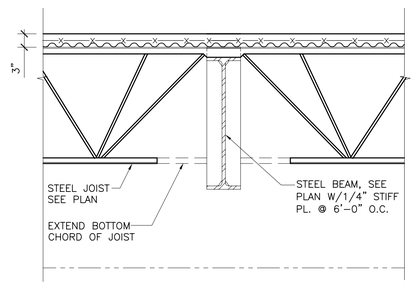

6 S-10 SECTION
SCALE: 3/4" = 1'-0"

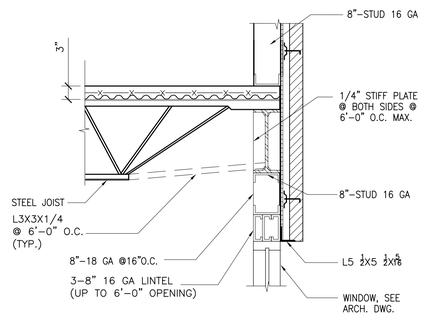

7 S-10 TYPICAL SECTION
SCALE: 3/4" = 1'-0"

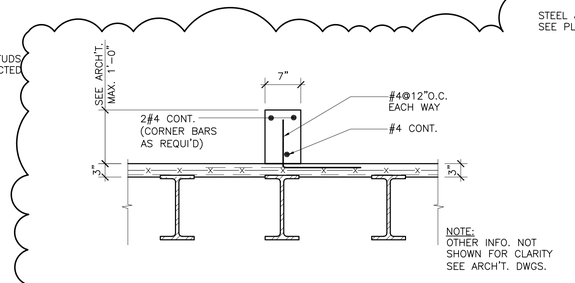

8 S-10 TYPICAL CURB DETAIL @ ROOF
SCALE: 3/4" = 1'-0"

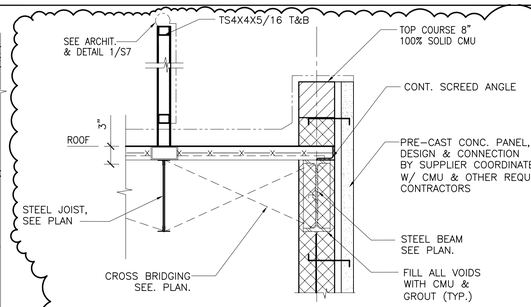

9 S10 SECTION
SCALE: 3/4" = 1'-0"

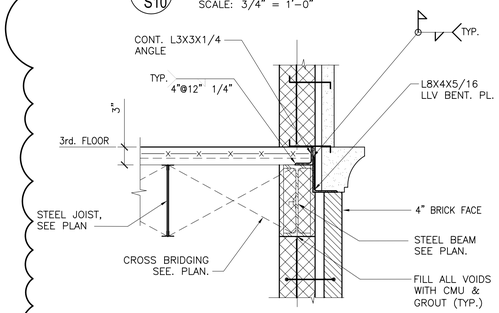

10 S10 SECTION
SCALE: 3/4" = 1'-0"

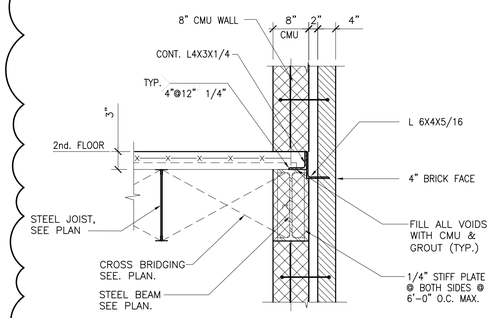

11 S10 SECTION
SCALE: 3/4" = 1'-0"

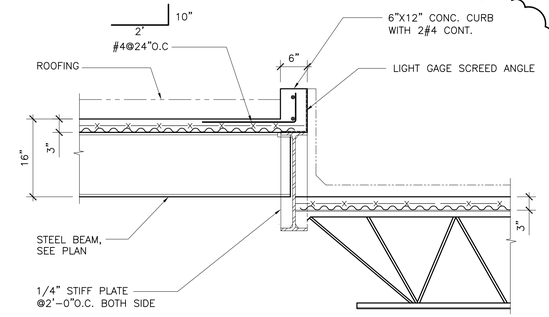

13 S-10 SECTION
SCALE: 3/4" = 1'-0"

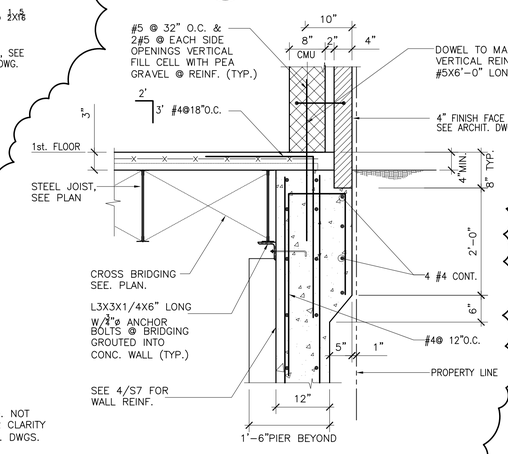

12 S-10 SECTION
SCALE: 3/4" = 1'-0"

DESIGNED Y.RYZHKOVA	1	04.01.09	ADDENDUM 1 – VALUE ENGINEERING		
DRAWN	ISSUED	02.25.09			
CHECKED M.KNIGHT	REVISION	DATE	DESCRIPTION	BY	APP

CERTIFICATION

PROJECT DRAWINGS

ARCHITECTURE

SECTIONS

DRAWING NO.

S10

WARD 1 SENIOR WELLNESS CENTER
3531 Georgia Ave., N.W.
Washington, D.C.

CHIEF DESIGN & ENGINEERING DIVISION
DATE

REGISTRATION No.
DATE
ARCHITECT
DATE

GOVERNMENT OF THE DISTRICT OF COLUMBIA
OFFICE OF PROPERTY MANAGEMENT

PROJECT NO. EA 129 C
BLDG NO.
DATE 11.02.06
SHEET NO 71 OF 98

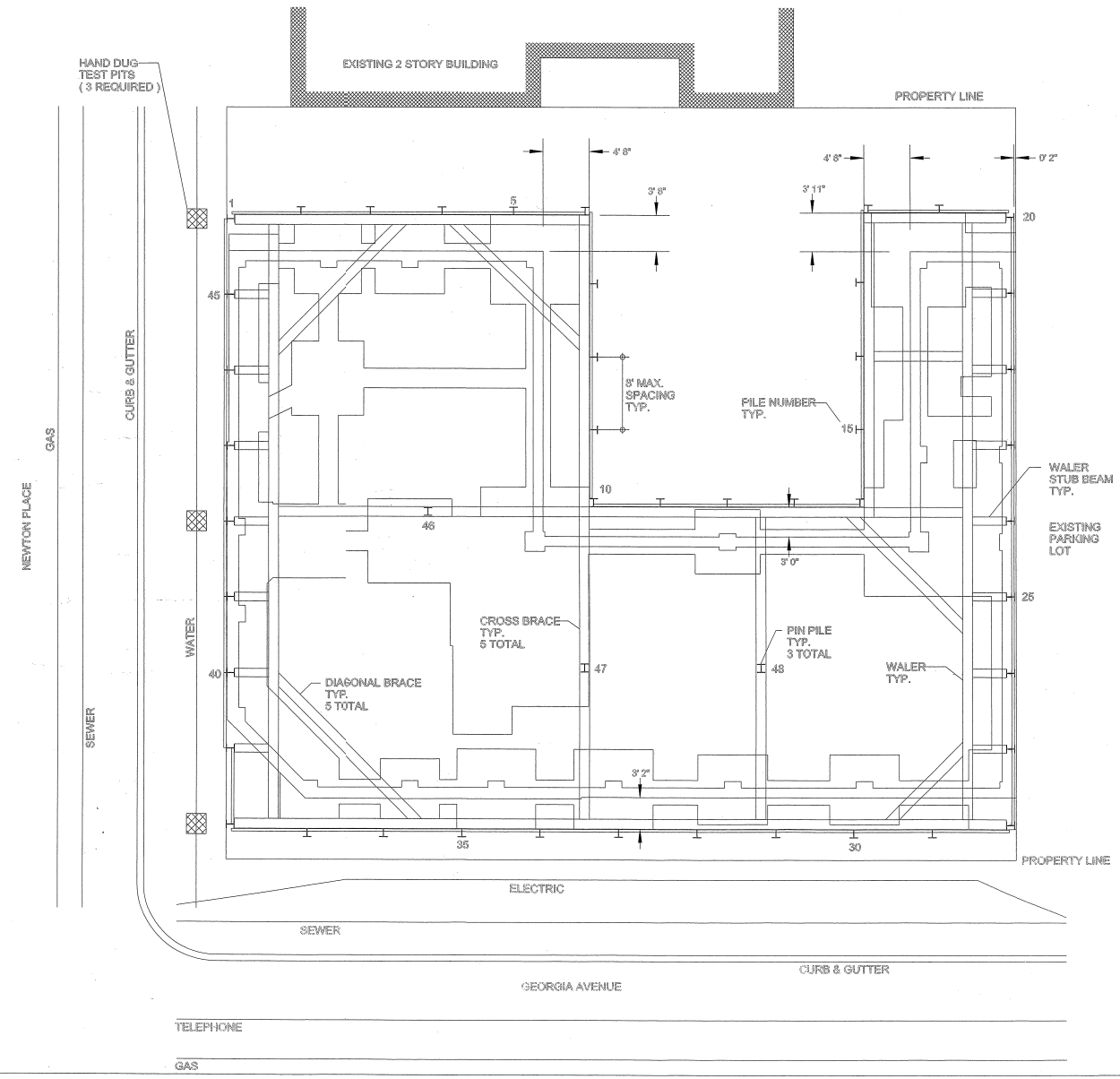

PLAN VIEW 3/16" = 1' - 0"

PLAN NORTH

FOR REFERENCE ONLY
NOT FOR CONSTRUCTION

GENERAL NOTES:

1. SEE CONTRACT DRAWINGS FOR ALL DTEAILS AND DIMENSIONS NOT SHOWN ON THESE DRAWINGS. (Not for shoring)

2. ALL STEEL MEMBERS TO BE A 572 - 50 KSI STEEL.

3. ALL WELDING PER AWS REQUIREMENTS.

4. ALL LAGGING TO BE 3" NOMINAL THICKNESS MIXED HARDWOODS. LAGGING TO UTILIZE 1" LOUVER BLOCKS IN ALL AREAS.

5 ALL PILES AND LAGGING TO BE REMOVED TO 4 FEET BELOW FINISHED GRADE UPON COMPLETION OF BACKFILL.

6. PRECONSTRUCTION SURVEY, MONITORING OF SHEETING AND SHORING AND ADJACENT STRUCTURES IS BY OTHERS.

7. SEE DRAWING 2 OF 2 FOR SECTIONS AND DETAILS.

8. UTILITY LOCATION, RELOCATION AND SUPPORT IS TO BE BY OTHERS. EXISTING WATER LINE ON NORTH SIDE TO BE LOCATED USING 3 HAND DUG PITS TO VERIFY LOCATION PRIOR TO INSTALLING PILES ON THIS SIDE.

9. NO TIEBACKS ARE TO BE USED FOR SUPPORT.

10. PILES NUBER 1 AND 38 TO 45 ARE TO BE PREDRILLED TO 2 FEET BELOW THE ADJACENT WATER LINE INVERT PRIOR TO DRIVING PILES.

PILE TABLE:

ALL PILES ARE TO BE HP 10 X 42 AT 25 FEET LONG.
(INCLUDES 45 SOLDIER PILES AND 3 PIN PILES)

SUBMIT TO DCRA

APPROVED

☐ APPROVED AS NOTED

☐ APPROVED AS NOTED AND RESUBMIT

☐ DISAPPROVED

THIS REVIEW IS FOR GENERAL CONFORMANCE WITH THE DESIGN CONCEPT ONLY. THE CONTRACTOR REMAINS RESPONSIBLE FOR:

1. COMPLIANCE WITH THE CONTRACT DOCUMENTS.
2. CONFIRMING AND COMPILATING QUANTITIES AND DIMENSIONS.
3. SELECTING FABRICATION PROCESSES AND TECHNIQUES OF CONSTRUCTION.
4. COORDINATION OF THIS WORK WITH OTHER TRADES.
5. PERFORMING THIS WORK IN A SAFE AND SATISFACTORY MANNER.
6. COMPLIANCE WITH THE CONTRACTOR'S CONSTRUCTION PROGRAM.
7. ALL OTHER PROVISIONS OF THE AGREEMENTS.

IT IS UNDERSTOOD THAT THE ENGINEER'S NOTATION ON THE SUBMITTAL IS NOT TO BE CONSTRUED AS AN AUTHORIZATION FOR ADDITIONAL WORK OR ADDITIONAL COST.

MGV

COUNSELTING STRUCTURAL ENGINEERS, INC.
12250 FLEDERICK ROAD, SUITE 207
BOCCONILLE, MARYLAND 20850
TEL. 301 251 5531

DATE 3/30/07 BY: MV

JAMES W. VOGT
No. 20871
PROFESSIONAL ENGINEER
DISTRICT OF COLUMBIA

See Contract drawing for footing elevations.

RECEIVED
AUG 13 2007
James Bailey and Associates

WARD 1 SENIOR WELLNESS CENTER 3531 GEORGIA AVENUE N.W. WASHINGTON D.C.	
SHEETING AND SHORING PLAN DRAWING	DRAWING 1 OF 2

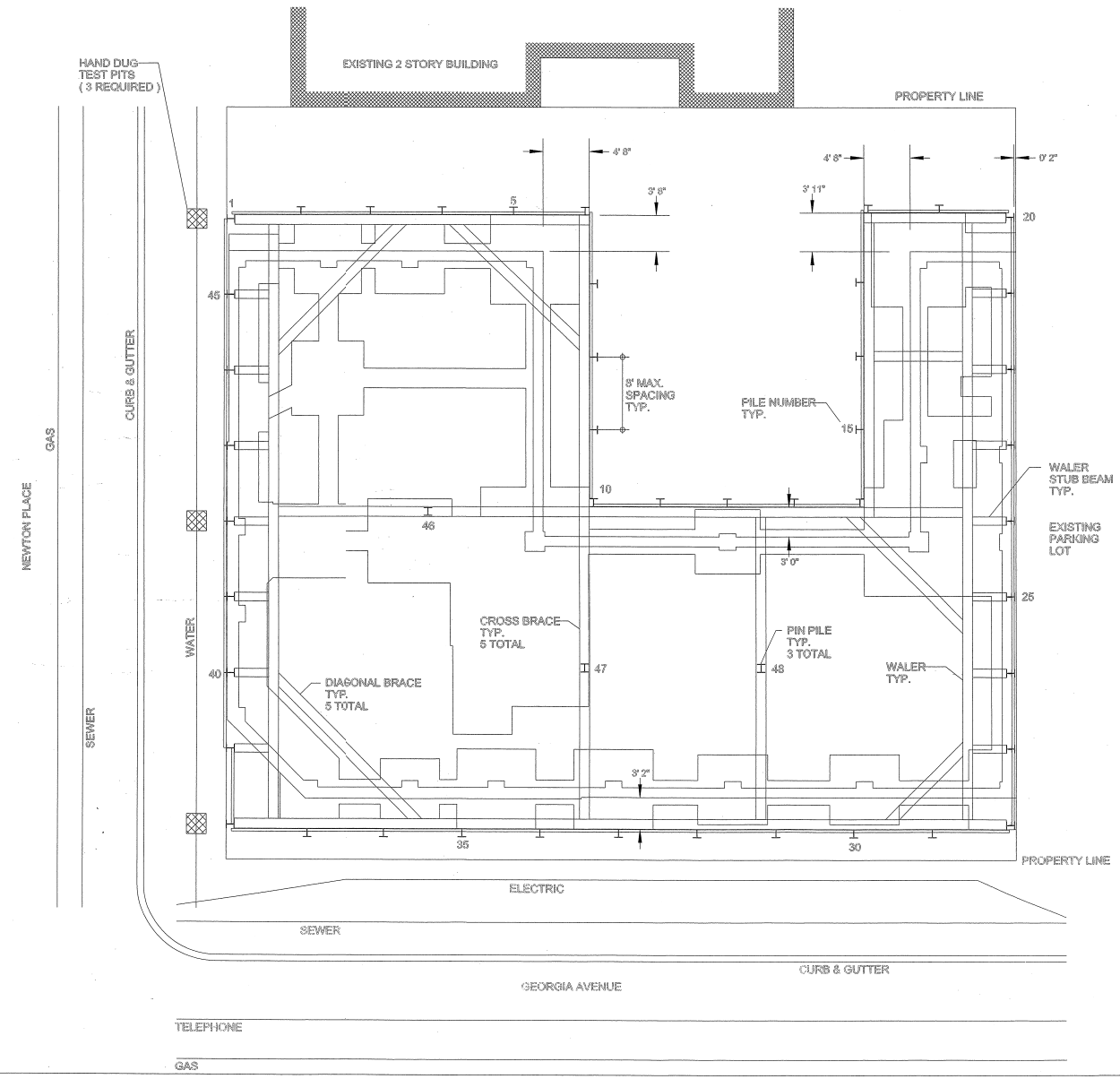

PLAN VIEW 3/16" = 1' - 0"

PLAN NORTH

FOR REFERENCE ONLY
NOT FOR CONSTRUCTION

GENERAL NOTES:

1. SEE CONTRACT DRAWINGS FOR ALL DTEAILS AND DIMENSIONS NOT SHOWN ON THESE DRAWINGS. (Not for shoring)

2. ALL STEEL MEMBERS TO BE A 572 - 50 KSI STEEL.

3. ALL WELDING PER AWS REQUIREMENTS.

4. ALL LAGGING TO BE 3" NOMINAL THICKNESS MIXED HARDWOODS. LAGGING TO UTILIZE 1" LOUVER BLOCKS IN ALL AREAS.

5 ALL PILES AND LAGGING TO BE REMOVED TO 4 FEET BELOW FINISHED GRADE UPON COMPLETION OF BACKFILL.

6. PRECONSTRUCTION SURVEY, MONITORING OF SHEETING AND SHORING AND ADJACENT STRUCTURES IS BY OTHERS.

7. SEE DRAWING 2 OF 2 FOR SECTIONS AND DETAILS.

8. UTILITY LOCATION, RELOCATION AND SUPPORT IS TO BE BY OTHERS. EXISTING WATER LINE ON NORTH SIDE TO BE LOCATED USING 3 HAND DUG PITS TO VERIFY LOCATION PRIOR TO INSTALLING PILES ON THIS SIDE.

9. NO TIEBACKS ARE TO BE USED FOR SUPPORT.

10. PILES NUBER 1 AND 38 TO 45 ARE TO BE PREDRILLED TO 2 FEET BELOW THE ADJACENT WATER LINE INVERT PRIOR TO DRIVING PILES.

PILE TABLE:

ALL PILES ARE TO BE HP 10 X 42 AT 25 FEET LONG.
(INCLUDES 45 SOLDIER PILES AND 3 PIN PILES)

SUBMIT TO DCRA

APPROVED

☐ APPROVED AS NOTED

☐ APPROVED AS NOTED AND RESUBMIT

☐ DISAPPROVED

THIS REVIEW IS FOR GENERAL CONFORMANCE WITH THE DESIGN CONCEPT ONLY. THE CONTRACTOR REMAINS RESPONSIBLE FOR:

1. COMPLIANCE WITH THE CONTRACT DOCUMENTS.
2. CONFIRMING AND COMPILATING QUANTITIES AND DIMENSIONS.
3. SELECTING FABRICATION PROCESSES AND TECHNIQUES OF CONSTRUCTION.
4. COORDINATION OF THIS WORK WITH OTHER TRADES.
5. PERFORMING THIS WORK IN A SAFE AND SATISFACTORY MANNER.
6. COMPLIANCE WITH THE CONTRACTOR'S CONSTRUCTION PROGRAM.
7. ALL OTHER PROVISIONS OF THE AGREEMENTS.

IT IS UNDERSTOOD THAT THE ENGINEER'S NOTATION ON THE SUBMITTAL IS NOT TO BE CONSTRUED AS AN AUTHORIZATION FOR ADDITIONAL WORK OR ADDITIONAL COST.

MGV

COUNSELTING STRUCTURAL ENGINEERS, INC.
12250 FLEDERICK ROAD, SUITE 207
BOCCONILLE, MARYLAND 20850
TEL. 301 251 5531

DATE 3/30/07 BY: MV

JAMES W. VOGT
No. 20871
PROFESSIONAL ENGINEER
DISTRICT OF COLUMBIA

See Contract drawing for footing elevations.

RECEIVED
AUG 13 2007
James Bailey and Associates

WARD 1 SENIOR WELLNESS CENTER 3531 GEORGIA AVENUE N.W. WASHINGTON D.C.	
SHEETING AND SHORING PLAN DRAWING	DRAWING 1 OF 2

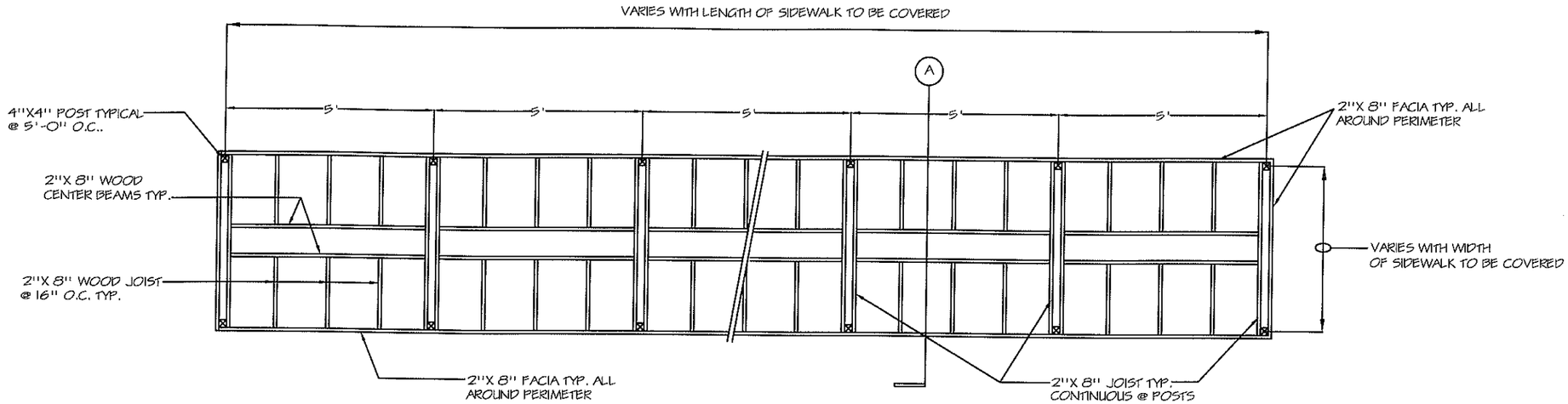

REFLECTIVE CEILING PLAN
SCALE: N.T.S.

NOTE: THIS DRAWING IS DIAGRAMMATIC AND FOR BIDDING PURPOSES

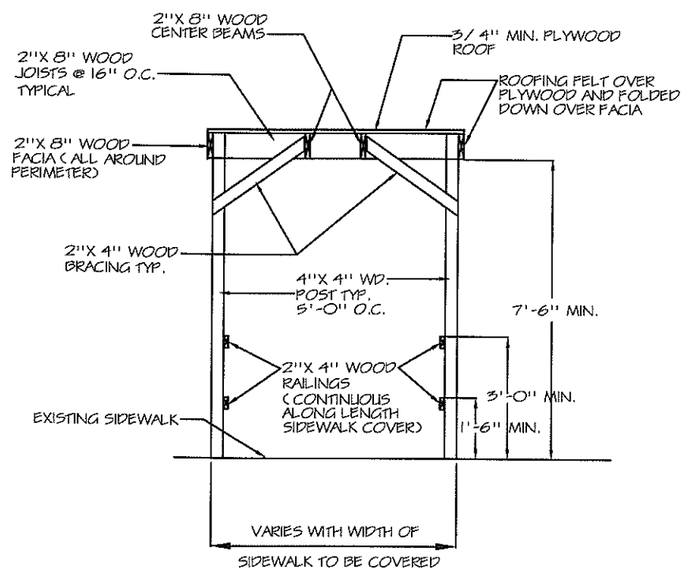

A SECTION / ELEVATION
SCALE: N.T.S.

GENERAL NOTES:

1. ALL DIMENSIONS AND CONDITIONS ARE APPROXIMATE AND SHALL BE VERFIED IN THE FIELD BY THE CONTRACTOR BEFORE ANY WORK IS TO BEGIN.
2. THE CONTRACTOR SHALL BE RESPONSIBLE FOR ALL WORK PERFORMED WHETHER SHOWN AND/ OR MENTIONED IN THE DRAWINGS OR NOT, BUT CONSTITUTES A THOROUGH AND COMPLETE JOB.
3. ALL NECESSARY PRECAUTIONS SHALL BE TAKEN BY THE CONTRACTOR TO PROTECT ALL EXISTING CONDITIONS OF (BUILDINGS, SIDEWALKS, LANDSCAPING, ETC.) DAMAGED COMPONENTS SHALL BE REPAIRED OR REPLACED BY THE CONTRACTOR TO AS CLOSE AS POSSIBLE TO IT'S ORIGINAL CONDI- BY THE CONTRACTOR AT NO COST TO THE DISTRICT.
4. ALL WORK SHALL BE DONE COMPLIANCE TO THE LATEST LOCAL, STATE AND FEDERAL CODES AND REGULATIONS AND INDUSTRY STANDARDS.

STRUCTURAL NOTES:

1. PLYWOOD:
   COMPLYING WITH APA-STRUCTURAL 1/ II C-C EXTERIOR TYPE FOR ROOF, 3/ 4" MINIMUM THICKNESS.
2. FRAMING LUMBER:
   SHALL BE SURFACED DRY 9EXCEPT STUDS, WHICH SHALL BE KILN DRIED) AND SHALL CONFORM TO THE FOLLOWING SPECIES AND GRADE:
   A. RAFTERS AND JOISTS: DOUGLAS FIR-LARCH #2.
   B. BEAMS, BRIDGING AND HEADERS: DOUGLAS FIR-LARCH #1
   C. STUDS AND PLATES: DOUGLAS FIR, STUD GRAD.
   D. POST AND TIMBER: DOUGLAS FIR-LARCH #1.
3. TREATED WOOD: PROVIDE TREATED LUMBER COMPLYING WITH ACQ-D (CARBONATE), COPPER-AZOLE (CA-B), OR SODIUM BORATE (SBX (DOT) WITH Na5IO20 AT ALL LUMBER IN CONTACT WITH CONCRETE OR MASONRY.
4. ALL WOOD FRAMING SHALL CONFORM TO THE LATEST EDITION OF THE 'NATIONAL DESIGN SPECIFICATIONS FOR WOOD CONSTRUCTION''.
5. FASTENING SHALL BE IN ACCORDANCE WITH THE MOST RESTRICTIVE OF THE INTERNATIONAL BUILDING CODES LATEST EDITION.

SKETCH # 7 - NEW SIDEWALK COVER

WARD 1 SENIOR WELLNESS CENTER
3531 GEORGIA AVENUE N.W.
WASHINGTON, DC 20011

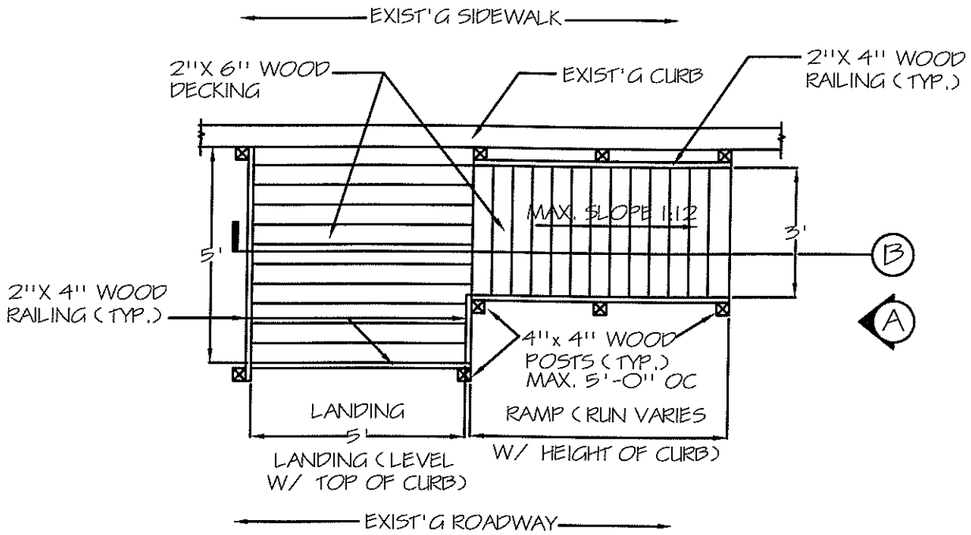

RAMP PLAN
N.T.S.

GENERAL NOTES:

1. ALL DIMENSIONS AND CONDITIONS ARE APPROXIMATE AND SHALL BE VERFIED IN THE FIELD BY THE CONTRACTOR BEFORE ANY WORK IS TO BEGIN.
2. THE CONTRACTOR SHALL BE RESPONSIBLE FOR ALL WORK PERFORMED WHETHER SHOWN AND/ OR MENTIONED IN THE DRAWINGS OR NOT, BUT CONSTITUTES A THOROUGH AND COMPLETE JOB.
3. ALL NECESSARY PRECAUTIONS SHALL BE TAKEN BY THE CONTRACTOR TO PROTECT ALL EXISTING CONDITIONS OF (BUILDINGS, SIDEWALKS, LANDSCAPING, ETC.) DAMAGED COMPONENTS SHALL BE REPAIRED OR REPLACED BY THE CONTRACTOR TO AS CLOSE AS POSSIBLE TO IT'S ORIGINAL CONDI- BY THE CONTRACTOR AT NO COST TO THE DISTRICT.
4. ALL WORK SHALL BE DONE COMPLIANCE TO THE LATEST LOCAL, STATE AND FEDERAL CODES AND REGULATIONS AND INDUSTRY STANDARDS.

STRUCTURAL NOTES:

1. FRAMING LUMBER:
   SHALL BE SURFACED DRY (EXCEPT STUDS, WHICH SHALL BE KILN DRIED) AND SHALL CONFORM TO THE FOLLOWING SPECIES AND GRADE:
   A. JOISTS: DOUGLAS FIR-LARCH #2.
   B. STUDS AND PLATES: DOUGLAS FIR, STUD GRAD.
   C. POST AND TIMBER: DOUGLAS FIR-LARCH #1.
2. TREATED WOOD: PROVIDE TREATED LUMBER COMPLYING WITH ACQ-D (CARBONATE), COPPER-AZOLE (CA-B), OR SODIUM BORATE (SBX (DOT) WITH NaSIO2O AT ALL LUMBER IN CONTACT WITH CONCRETE OR MASONRY.
3. ALL WOOD FRAMING SHALL CONFORM TO THE LATEST EDITION OF THE "NATIONAL DESIGN SPECIFICATIONS FOR WOOD CONSTRUCTION".
4. FASTENING SHALL BE IN ACCORDANCE WITH THE MOST RESTRICTIVE OF THE INTERNATIONAL BUILDING CODES LATEST EDITION.

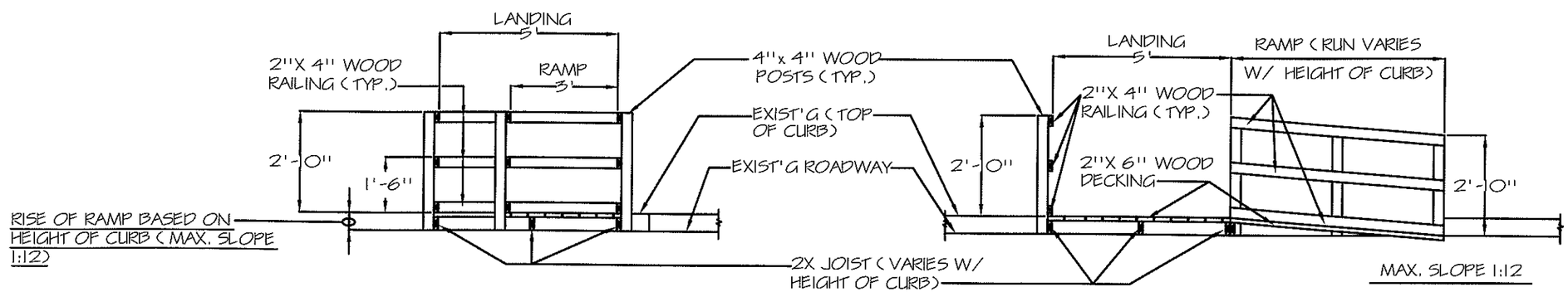

A RAMP ELEVATION/ SECTION
N.T.S.

B RAMP SECTION
N.T.S.

SKETCH #8 - NEW RAMP

WARD 1 SENIOR WELLNESS CENTER
3531 GEORGIA AVENUE N.W.
WASHINGTON, DC 20011

GOVERNMENT OF THE DISTRICT OF COLUMBIA
Office of the Chief Financial Officer
Office of Tax and Revenue

APR 14 2008

EXEMPTION NUMBER: 53-6001131
TYPE OF ORGANIZATION

- ☒ Instrumentality of the District of Columbia Sales Exemption
- ☐ Instrumentality of the Federal Government Sales Exemption
- ☐ State Government that has granted reciprocity to the D.C.
- ☐ International organization exempt by treaty Sales Exemption
- ☐ Organization exempt by Act of Congress Sales Exemption
- ☐ Other and Sales only _____Exemption

DISTRICT OF COLUMBIA GOVERNMENT
1350 PENNSYLVANIA AVENUE NW
WASHINGTON, DC 20004

Dear Sir or Madame:

Your organization is exempt from the District of Columbia Sales and Use Tax as a type of organization described above. In order to make tax-free purchases; a copy of your exemption letter should be given to vendors as evidence of the exempt status. Your organization may only use your exemption letter for purchases of taxable property and services for use and consumption in maintaining, operating, and conducting your activities. Officials, members or employees of your organization may not use your exemption letter for their personal use.

Instrumentalities of the Federal or District of Columbia Government making payments to the vendors with an authorized government purchase order or government check are not required to have an exemption letter.

If you have any questions, please call (202) 442-6586.

Sincerely yours,

Supervisory Auditor
Review and Conference Section

FR-300 (Rev. 03-04)